MT6261A GSM/GPRS/EDGE-RX SOC Processor Data Sheet

Version: 0.2
Release date: 2014-02-25

© 2012 - 2014 MediaTek Inc.
This document contains information that is proprietary to MediaTek Inc.
Unauthorized reproduction or disclosure of this information in whole or in part is strictly prohibited.

Specifications are subject to change without notice.

MEDIATEK CONFIDENTIAL
FOR dengzhenli@far-sightedmobile.com USE ONLY

Document Revision History

Revision	Date	Author	Description
0.1	2014-02-18	CP Dai	1st release
0.2	2014-02-25	CP Dai	Reviewed by software

MEDIATEK CONFIDENTIAL FOR dengzhenli@ far-sightedmobile.com USE ONLY

This document contains information that is proprietary to MediaTek Inc.
Unauthorized reproduction or disclosure of this information in whole or in part is strictly prohibited.

Table of Contents

Document Revision History **2**

Table of Contents **3**

Preface **7**

1 System Overview **8**
- 1.1 Platform Features 12
- 1.2 MODEM Features 14
- 1.3 GSM/GPRS RF Features 15
- 1.4 Multimedia Features 16
- 1.5 Bluetooth Features 18
- 1.6 FM Features 19
- 1.7 General Descriptions 20

2 Product Descriptions **22**
- 2.1 Pin Description 22
- 2.2 Electrical Characteristics 41
- 2.3 System Configuration 49
- 2.4 Power-on Sequence and Protection Logic 50
- 2.5 Analog Baseband 53
- 2.6 Power Management Unit Blocks 57
- 2.7 GSM/GPRS RF 69
- 2.8 Bluetooth 75
- 2.9 FM RF 78
- 2.10 Package Information 81
- 2.11 Ordering Information 84

3 Micro-Controller Unit Peripherals **85**
- 3.1 Pulse-Width Modulation Outputs (2 Channel) 85
- 3.2 SIM Interface 90
- 3.3 Keypad Scanner 110
- 3.4 General Purpose Inputs/Outputs 120
- 3.5 General-purpose Timer 256
- 3.6 MCU OSTIMER 261
- 3.7 UART 273
- 3.8 UART 289
- 3.9 UART 306
- 3.10 I2C/SCCB Controller 321
- 3.11 I2C/SCCB Controller 334
- 3.12 Real Time Clock 347
- 3.13 Auxiliary ADC Unit 362
- 3.14 USB Device Controller 375
- 3.15 Accessory Detector 393

This document contains information that is proprietary to MediaTek Inc.
Unauthorized reproduction or disclosure of this information in whole or in part is strictly prohibited.

MEDIATEK CONFIDENTIAL FOR dengzhenli@far-sightedmobile.com USE ONLY

3.16 SD Memory Card Controller 404
3.17 SD Memory Card Controller 431
3.18 BTIF 458

Lists of Tables and Figures

Table 1. Pin coordinates 22
Table 2. Acronym for pin types 25
Table 3. PIN function description and power domain 25
Table 4. Acronym for state of pins 28
Table 5. State of pins 28
Table 6. Acronym for pull-up and pull-down types 33
Table 7. Capability of PU/PD, driving and Schmitt trigger 33
Table 8. Absolute maximum ratings for power supply 41
Table 9. Absolute maximum ratings for voltage input 41
Table 10. Absolute maximum ratings for storage temperature 41
Table 11. Recommended operating conditions for power supply 42
Table 12. Recommended operating conditions for voltage input 42
Table 13. Recommended operating conditions for operating temperature 42
Table 14. Electrical characteristics 42
Table 15. Strapping table 49
Table 16. Mode selection of chip 49
Table 17. APC-DAC specifications 53
Table 18. Functional specifications of auxiliary ADC 54
Table 19. Functional specifications of analog voice blocks 56
Table 20. Functional specifications of analog audio blocks 57
Table 21. LDO types and brief specifications 60
Table 22. Analog LDO specifications 60
Table 23. Digital LDO specifications 61
Table 24. RTC LDO specification 62
Table 25. BOOST specification 62
Table 26. ISINKs and KPLED switches specification 63
Table 27. Charger detection specifications 68
Table 28. Pre-charge specifications 68
Table 29. Constant current specifications 68
Table 30. Constant voltage and over-voltage protection specifications 69
Table 31. BC1.1 specifications 69
Table 32. DC characteristics (TA = 25oC, VDD = 2.8V unless otherwise stated) 71
Table 33. Rx AC characteristics (TA = 25oC, VDD = 2.8V unless otherwise stated) 71
Table 34. Tx GMSK AC characteristics (TA = 25oC, VDD = 2.8V unless otherwise stated) 73
Table 35. SX AC characteristics (TA = 25oC, VDD = 2.8V unless otherwise stated) 74
Table 36. DCXO AC characteristics (TA = 25oC, VDD = 2.8V unless otherwise stated) 74
Table 37. Basic data rate – receiver specifications 76

This document contains information that is proprietary to MediaTek Inc.
Unauthorized reproduction or disclosure of this information in whole or in part is strictly prohibited.
MEDIATEK CONFIDENTIAL FOR dengzhenli@far-sightedmobile.com USE ONLY

Table 38. Basic data rate – transmitter specification 76
Table 39. Enhanced data rate – receiver specifications 77
Table 40. Enhanced data rate – transmitter specifications 78
Table 41 . FM receiver DC characteristics (TA=25°C, VDD=2.8V unless otherwise stated) 79
Table 42. FM receiver AC characteristics 79
Table 43. Time-out condition for answering to reset sequence 107
Table 44. 5*5 double KEY's order number in COL/ROW matrix 119
Table 45. 5*5 triple KEY's order number in COL/ROW matrix 119
Table 46. Abbreviations 261
Table 47. Wakeup sources 262
Table 48. Characteristics of wakeup sources 262
Table 49. Relationship between commands and touch panel control signals 365
Table 50. AUXADC channel description 365
Table 51. Sharing of pins for SD memory card controller 405
Table 52: Sharing of pins for SD memory card controller 432
Table 53. IIR[5:0] codes associated with the possible interrupts 460

Figure 1. Typical application of MT6261A 11
Figure 2. MT6261A block diagram 21
Figure 3. Ball diagram and top view 22
Figure 4. IO types in state of pins 32
Figure 5. Power-on/off control sequence by pressing PWRKEY and XOSC32_ENB = 0 50
Figure 6. Power-on/off control sequence by pressing PWRKEY and XOSC32_ENB = 1 51
Figure 7. Block diagram of audio mixed-signal blocks 56
Figure 8. PMU system block diagram. 58
Figure 9. Power domain 59
Figure 10. LDO block diagram 60
Figure 11. ISINKs and KPLED switches bock diagram 63
Figure 12. PCHR block diagram 65
Figure 13. Charging states diagram 66
Figure 14. Diagram of MT6261A 2G RFSYS 71
Figure 15. System diagram of Bluetooth RF transceiver 75
Figure 16. Block diagram of hardware top-level architecture 79
Figure 17. Outlines and dimension of TFBGA 8.1mm*7.6mm, 145-ball, 0.5 mm pitch package 83
Figure 18. Mass production top marking of MT6261A 84
Figure 19. PWM waveform 85
Figure 20. PWM waveform with register values 86
Figure 21. Block diagram of SIM interface 90
Figure 22. Timing diagram of SIM interface 92
Figure 23. Answering to reset sequence 107
Figure 24. 5x5 double keypad matrix (50 keys) 111
Figure 25. 5x5 triple keypad matrix (75 keys) 112
Figure 26. 5*5 double keypad scan waveform 112
Figure 27. One key pressed with de-bounce mechanism denoted 113
Figure 28. (a) Two keys pressed, case 1; (b) Two keys pressed, case 2 113

This document contains information that is proprietary to MediaTek Inc.
Unauthorized reproduction or disclosure of this information in whole or in part is strictly prohibited.
MEDIATEK CONFIDENTIAL FOR dengzhenfei@far-sightedmobile.com USE ONLY

Figure 29. kp timing register........ 118
Figure 30. GPIO block diagram 120
Figure 31. OS timer system view 261
Figure 32. Wakeup event and Irq_b integration diagram........ 263
Figure 33. Pause command complete and pause request state 267
Figure 34. Debug wakeup events 273
Figure 35. Block Diagram of UART1........ 274
Figure 36. Block Diagram of UART2........ 290
Figure 37. Block Diagram of UART3........ 307
Figure 38. AUXADC architecture 363
Figure 39. Touch panel circuit structure 364
Figure 40. Touch panel sampling waveform 365
Figure 41. USB11 controller system diagram 376
Figure 42. Suggested Accessory Detection Circuit........ 394
Figure 43. The Sate machine between Microphone and Hook-Switch plug-in/out change........ 395
Figure 44. PWM waveform........ 395
Figure 45. PWM waveform with register value present 398
Figure 46. Card detection for SD memory card 406
Figure 47. Card detection for SD memory card 433
Figure 48. Card detection for SD memory card (Scheme 2) 433
Figure 49. Interface connection between BT and baseband system........ 459

This document contains information that is proprietary to MediaTek Inc.
Unauthorized reproduction or disclosure of this information in whole or in part is strictly prohibited.
MEDIATEK CONFIDENTIAL FOR dengzhenli@ far-sightedmobile.com USE ONLY

Preface

Acronyms for register types

R/W	For both read and write access
RO	Read only
RC	Read only. After the register bank is read, every bit that is HIGH(1) will be cleared to LOW(0) automatically.
WO	Write only
W1S	Write only. When data bits are written to the register bank, every bit that is HIGH(1) will cause the corresponding bit to be set to 1. Data bits that are LOW(0) have no effects on the corresponding bit.
W1C	Write only. When data bits are written to the register bank, every bit that is HIGH(1) will cause the corresponding bit to be cleared to 0. Data bits that are LOW(0) have no effects on the corresponding bit.

MEDIATEK CONFIDENTIAL FOR dengzhenli@ far-sightedmobile.com USE ONLY

This document contains information that is proprietary to MediaTek Inc.
Unauthorized reproduction or disclosure of this information in whole or in part is strictly prohibited.

1 System Overview

MT6261A is a monolithic chip integrating leading edge power management unit, analog baseband and radio circuitry based on the low-power CMOS process.

MT6261A is a feature-rich and extremely powerful single-chip solution for high-end GSM/GPRS capability. Based on the 32-bit ARM7EJ-S™ RISC processor, MT6261A's superb processing power, along with high bandwidth architecture and dedicated hardware support, provides a platform for high-performance GPRS Class 12 MODEM application and leading-edge multimedia applications.

MT6261A also features:

- A highly integrated Bluetooth transceiver which is fully compliant with Bluetooth specification v3.0.
- A FM receiver supporting both audio broadcast de-modulation and RDS/RBDS data decoding.

Typical application diagram is shown in **Figure 1**.

Platform

MT6261A is capable of running the ARM7EJ-S™ RISC processor, which provides the best trade-off between system performance and power consumption.

For large amounts of data transfer, high-performance DMA (Direct Memory Access) with hardware flow control is implemented, which greatly enhances the data movement speed while reducing the MCU processing load.

Targeted as a media-rich platform for mobile applications, MT6261A also provides hardware security digital rights management for copyright protection. For further safeguard and to protect the manufacturer's development investment, hardware flash content protection is provided to prevent unauthorized porting of the software load.

Memory

MT6261A supports serial flash interface with various operating frequencies.

Multimedia

The MT6261A multimedia subsystem provides serial interface for CMOS sensors. The camera resolution is up to VGA size. The software-based codec can be used to process various video types. To take advantage of the high MCU performance, GIF and PNG decoders are implemented by the software.

In addition, MT6261A is implemented with a high-performance audio synthesis technology, as well as a high-quality audio amplifier to provide superior audio experiences.

Connectivity and storage

MT6261A supports UART, USB 1.1 FS/LS , SDIO and SD storage systems. These interfaces provide MT6261A users with the highest level of flexibility in implementing high-end solutions.

To achieve a complete user interface, MT6261A also brings together all the necessary peripheral blocks for a multimedia GSM/GPRS phone. The peripheral blocks include the keypad scanner with the capability to detect multiple key presses, SIM controller, real-time clock, PWM, serial LCD controller and general-purpose programmable I/Os.

Audio

This document contains information that is proprietary to MediaTek Inc.
Unauthorized reproduction or disclosure of this information in whole or in part is strictly prohibited.
MEDIATEK CONFIDENTIAL FOR denghenli@ far-sightedmobile.com USE ONLY

Using a highly integrated mixed-signal audio front-end, the MT6261A architecture provides easy audio interfacing with direct connection to the audio transducers. The audio interface integrates A/D converters for voice band, as well as high-resolution stereo D/A converters for both audio and voice band.

MT6261A supports AMR codec to adaptively optimize the quality of speech and audio. Moreover, HE-AAC codec is implemented to deliver CD-quality audio at low bit rates.

In addition, an 1.2W audio amplifier is also embedded to save the BOM cost of adopting external amplifiers.

GSM/GPRS radio

MT6261A integrates a mixed-signal baseband front-end in order to provide a well-organized radio interface with flexibility for efficient customization. The front-end contains gain and offset calibration mechanisms and filters with programmable coefficients for comprehensive compatibility control on RF modules. MT6261A achieves outstanding MODEM performance by utilizing a highly dynamic range ADC in the RF downlink path.

MT6261A embeds a high-performance and completely integrated single-ended SAW-less RF transceiver for multi-band GSM cellular system. In this RF transceiver, a quad-band receiving feature with high sensitivity is supported utilizing one RF receiver and a fully integrated channel filter. With ultra-high dynamic range, the off-chip balun and SAW filters on the receiving path can be removed for BOM cost reduction. In addition, the minimum component count is guaranteed by realizing a highly integrated transmitter, low-spur frequency synthesizer and a Digitally-Controlled Crystal Oscillator (DCXO).

Bluetooth radio

MT6261A offers a highly integrated Bluetooth radio and baseband processor. Only a minimum of external components are required. MT6261A provides superior sensitivity and class 1 output power and thus ensures the quality of the connection with a wide range of Bluetooth devices.

MT6261A is fully compliant with Bluetooth v3.0 and offers enhanced data rates of up to 3Mbps. It also provides the coexistence protocol with 802.11 system.

MT6261A supports rich Bluetooth profiles, enabling diversified applications that are widely used on the handset with excellent interoperability.

FM radio

The FM radio subsystem provides a completely integrated FM Rx receiver supporting 65 ~ 108MHz FM bands with 50kHz tuning step. In addition to receiving FM audio broadcasting, the digital RDS/RBDS data system is supported as well. The integrated FM transceiver utilizes state-of-the-art digital demodulation/modulation techniques to achieve excellent performance.

In order to achieve high SINAD, good sensitivity and excellent noise suppression, the FM receiver adopts adaptive demodulation scheme to optimize Rx system performance in all ranges of signal quality by reference of a very sophisticated channel quality index (CQI). When the received signal quality is poor, the design not only enhances the ACI rejection capability but also uses a very ingenious skill to soft mute annoying noise so as to provide good perception quality.

The FM radio subsystem supports both long antenna, which is usually an earphone, and

This document contains information that is proprietary to MediaTek Inc.
Unauthorized reproduction or disclosure of this information in whole or in part is strictly prohibited.
MEDIATEK CONFIDENTIAL FOR dengzhen@far-sightedmobile.com USE ONLY

auto-calibrated short antenna, which is usually a FPC short antenna or shared antenna with GSM for different application scenarios.

Debugging function

The JTAG interface enables in-circuit debugging of the software program with the ARM7EJ-S™ core. With this standardized debugging interface, MT6261A provides developers with a wide set of options in choosing ARM development kits from different third party vendors.

Power management

A power management is embedded in MT6261A to provide rich features a high-end feature phone supports, including Li-ion battery charger, high performance and low quiescent current LDOs, and drivers for LED and backlight.

MT6261A offers various low-power features to help reduce the system power consumption. MT6261A is also fabricated in an advanced low-power CMOS process, hence providing an overall ultra-low leakage solution.

Package

The MT6261A device is offered in a 8.1mm×7.6mm, 145-ball, 0.5mm pitch, TFBGA package.

This document contains information that is proprietary to MediaTek Inc.
Unauthorized reproduction or disclosure of this information in whole or in part is strictly prohibited.
MEDIATEK CONFIDENTIAL FOR dengzhenli@ far-sightedmobile.com USE ONLY

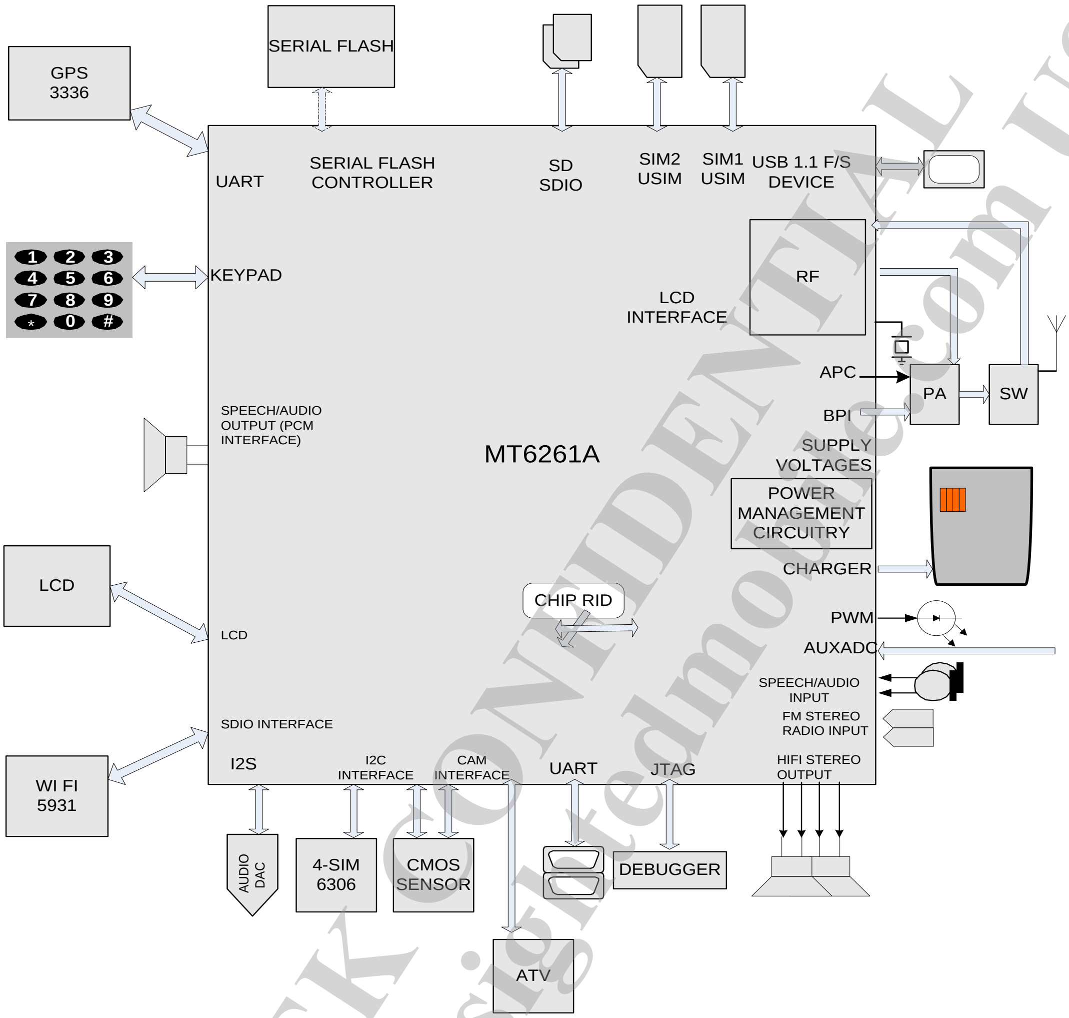

Figure 1. Typical application of MT6261A

MEDIATEK CONFIDENTIAL FOR dengzhenli@ far-sightedmobile.com USE ONLY

This document contains information that is proprietary to MediaTek Inc.
Unauthorized reproduction or disclosure of this information in whole or in part is strictly prohibited.

1.1 Platform Features

General

- Integrated voice-band, audio-band and base-band analog front-end
- Integrated full-featured power management unit

MCU subsystem

- ARM7EJ-S™ 32-bit RISC processor
- Java hardware acceleration for fast Java-based games and applets
- High-performance multi-layer AHB bus
- Dedicated DMA bus with 16 DMA channels
- On-chip boot ROM for factory flash programming
- Watchdog timer for system crash recovery
- 3 sets of general-purpose timers
- Circuit switch data coprocessor
- Division coprocessor

Serial flash interfaces

- Supports various operating frequency combinations for serial flash
- Supports QPI and SPI serial flash

User interfaces

- 5-row x 5-column keypad controller with hardware scanner
- Supports multiple key presses for gaming
- Dual SIM/USIM controller with hardware T = 0/T = 1 protocol control
- Real-time clock (RTC) operating with a low-quiescent-current power supply
- General-purpose I/Os (GPIOs) available for auxiliary applications
- 2 sets of Pulse Width Modulation (PWM) output
- 24 external interrupt lines
- 1 external channel auxiliary 10-bit A/D converter

Security

- Supports security key and chip random ID

Connectivity

- 3 UARTs with hardware flow control and supports baud rate up to 921,600 bps
- FS/LS USB 1.1 device controller
- Multimedia card, secure digital Memory Card, host controller with flexible I/O voltage power
- Supports 4-bit SDIO interface for SDIO peripherals as well as WIFI connectivity
- DAI/PCM and I2S interface for audio applications
- I2C master interface for peripheral management including image sensors
- SPI master/slave interface for peripheral management.

Power management

- Li-ion battery charger
- 13 LDOs for the power supply of memory card, camera, Bluetooth, RF, SIM card and other diversified usage
- 1 open-drain output switches to supply/control the LED
- LDO type vibrator
- One NMOS switch to control keypad LED
- Thermal overload protection
- Under-voltage lock-out protection
- Over-voltage protection
- Different levels of power-down modes with sophisticated software control enables excellent power saving performance.

MEDIATEK CONFIDENTIAL FOR dengzhen@ far-sightedmobile.com USE ONLY

This document contains information that is proprietary to MediaTek Inc.
Unauthorized reproduction or disclosure of this information in whole or in part is strictly prohibited.

Test and debugging

- Built-in digital and analog loop back modes for both audio and baseband front-end
- DAI port complies with GSM Rec.11.10.
- JTAG port for debugging embedded MCU

MEDIATEK CONFIDENTIAL
FOR dengzhenli@ far-sightedmobile.com USE ONLY

This document contains information that is proprietary to MediaTek Inc.
Unauthorized reproduction or disclosure of this information in whole or in part is strictly prohibited.

1.2 MODEM Features

Radio interface and baseband front-end

- Digital PM data path with baseband front-end
- High dynamic range delta-sigma ADC converts the downlink analog I and Q signals to digital baseband.
- 10-bit D/A converter for Automatic Power Control (APC)
- Programmable radio Rx filter with adaptive gain control
- Dedicated Rx filter for FB acquisition
- 6-pin Baseband Parallel Interface (BPI) with programmable driving strength
- Supports multi-band

Voice and modem CODEC

- Dial tone generation
- Voice memo
- Noise reduction
- Echo suppression
- Advanced sidetone oscillation reduction
- Digital sidetone generator with programmable gain
- Two programmable acoustic compensation filters
- Supports GSM/GPRS modem
- GSM quad vocoders for adaptive multirate (AMR), enhanced full rate (EFR), full rate (FR) and half rate (HR)
- GSM channel coding, equalization and A5/1, A5/2 and A5/3 ciphering
- GPRS GEA1, GEA2 and GEA3 ciphering
- GPRS packet switched data with CS1/CS2/CS3/CS4 coding schemes
- GPRS Class 12
- Supports SAIC (single antenna interference cancellation) technology
- Supports VAMOS(Voice services over Adaptive Multi-user channels on One Slot) technology in R9 spec.

Voice interface and voice front-end

- Microphone input has one low-noise amplifier with programmable gain and Automatic Gain Control (AGC) mechanisms
- Voice power amplifier with programmable gain
- 2nd order Sigma-Delta A/D converter for voice uplink path
- Shares D/A converter with audio playback path
- Supports full-duplex hands-free operation
- Compliant with GSM 03.50

This document contains information that is proprietary to MediaTek Inc.
Unauthorized reproduction or disclosure of this information in whole or in part is strictly prohibited.
MEDIATEK CONFIDENTIAL FOR dengzhenli@far-sightedmobile.com USE ONLY

1.3 GSM/GPRS RF Features

Receiver

- Dual single-ended LNAs support Quad bandQuadrature RF mixer
- Fully integrated channel filter
- High dynamic range ADC
- 12dB PGA gain with 6dB gain step

Transmitter

- Transmitter outputs support quad bands.
- Highly precise and low noise RF transmitter for GSM/GPRS applications

Frequency synthesizer

- Programmable fractional-N synthesizer
- Integrated wide range RFVCO
- Integrated loop filter
- Fast settling time suitable for multi-slot GPRS applications

Digitally-Controlled Crystal Oscillator (DCXO)

- Two-pin 26MHz crystal oscillator
- On-chip programmable capacitor array for coarse-tuning
- On-chip programmable capacitor array for fine-tuning
- Low power mode supports 32K crystal removal

MEDIATEK CONFIDENTIAL FOR dengzhenli@far-sightedmobile.com USE ONLY

This document contains information that is proprietary to MediaTek Inc.
Unauthorized reproduction or disclosure of this information in whole or in part is strictly prohibited.

1.4 Multimedia Features

LCD controller

- Supports simultaneous connection to serial 2 lane LCD modules
- LCM formats supported: RGB565, RGB666, RGB888
- Supports LCD module with maximum resolution up to 320x240
- Per pixel alpha channel
- True color engine
- Supports hardware display rotation
- Capable of combining display memories with up to 4 blending layers

Camera interface

- YUV422 format image input
- Capable of processing image of size up to VGA (Mediatek serial interface)

JPEG decoder

- Baseline JPEG decoding
- Supports various YUV formats, DC/AC Huffman tables and quantization tables

JPEG encoder

- ISO/IEC 10918-1 JPEG baseline mode
- ISO/IEC 10918-2 compliance
- Supports YUV420 and grayscale formats
- Supports EXIF/JFIF
- Standard DC and AC Huffman tables
- Provides 5 levels of encode quality
- Supports zeros shutter delay

MJPEG

- Decode spec: CIF@30fps
- Encode spec: QVGA@15fps

Image data processing

- Supports 4x digital zoom
- High throughput hardware scaler. Capable of tailoring an image to an arbitrary size.
- Horizontal scaling with bilinear interpolation
- Vertical scaling with bilinear interpolation
- YUV and RGB color space conversion
- RGB/YCbCr format thumbnail output

MPEG-4/H.263 CODEC

- Software-based MPEG4 encoder
- Software-based MPEG4 decoder
- ISO/IEC 14496-2 simple profile:
  - Decode spec: 480x320@25fps
  - Encode spec: QVGA@15fps
- ISO/IEC 14496-2 advanced simple profile:
  - Decode @ level 0/1/2/3
  - ITU-T H.263 profile 0 @ level 40
- Supports visual tools for decoder: I-VOP, P-VOP, B-VOP, AC/DC prediction, 4-MV, unrestricted MV, error resilience, short header, global motion compensation, method 1/2 quantization, quarter-pel motion compensation.
- Error resilience for decoder: Slice resynchronization, data partitioning, reversible VLC
- Supports visual tools for encoder: I-VOP, P-VOP, Half-Pel, DC prediction, unrestricted MV, short header

H.264

- ISO/IEC 14496-10 baseline profile
  - Decode spec: QCIF@30fps

2D accelerator

- Supports 32-bpp ARGB8888, 24-bpp RGB888, 16-bpp RGB565, 24-bpp ARGB6666.

This document contains information that is proprietary to MediaTek Inc.
Unauthorized reproduction or disclosure of this information in whole or in part is strictly prohibited.

MEDIATEK CONFIDENTIAL FOR dengzhenli@far-sightedmobile.com USE ONLY

- 4 layers overlay with individual color format, window size, source key, constant alpha and rotation
- Rectangle fill with constant
- BitBlt: Capable with 7 rotation types
- Alpha blending with 7 rotation types, per-pixel alpha and pre-multiplied alpha
- Font drawing: Normal font and anti-aliasing font

Audio CODEC

- Supports AAC codec decoding
- Wavetable synthesis with up to 64 tones
- Advanced wavetable synthesizer capable of generating simulated stereo
- Wavetable including GM full set of 128 instruments and 47 sets of percussions
- PCM playback and record
- Digital audio playback

Audio interface and audio front-end

- Supports I2S interface
- High-resolution D/A converters for stereo audio playback
- Voice band A/D converter support
- Stereo to mono conversion

MEDIATEK CONFIDENTIAL
FOR dengzhenli@ far-sightedmobile.com USE ONLY

This document contains information that is proprietary to MediaTek Inc.
Unauthorized reproduction or disclosure of this information in whole or in part is strictly prohibited.

1.5 Bluetooth Features

Radio features

- Fully compliant with Bluetooth specification 3.0 + EDR
- Low out-of-band spurious emissions support simultaneous operation with GPS and GSM/GPRS worldwide radio systems
- Low-IF architecture with high degree of linearity and high order channel filter
- Integrated T/R switch and Balun
- Fully integrated PA provides 7.5dBm output power
- -95dBm sensitivity with excellent interference rejection performance
- Hardware AGC dynamically adjusts receiver performance in changing environments

Baseband features

- Up to 4 simultaneous active ACL links
- Up to 1 simultaneous SCO or eSCO link with CVSD coding
- Supports eSCO
- Scatternet support: Up to 4 piconets simultaneously with background inquiry/page scan
- Supports sniff mode
- AFH and PTA collaborative support for WLAN/BT coexistence
- Idle mode and sleep mode enables ultra-low power consumption.
- Supports PCM interface and built-in programmable transcoders for linear voice with re-transmission
- Built-in hardware modem engine for access code correlation, header error correction, forward error correction, CRC, whitening and encryption
- Channel quality driven data rate adaptation
- Channel assessment for AFH

Platform features

- Embedded processor for Bluetooth protocol stack with built-in memory system
- Fully verified ROM based system with code patch for feature enhancement

MEDIATEK CONFIDENTIAL FOR dengzhenli@ far-sightedmobile.com USE ONLY

This document contains information that is proprietary to MediaTek Inc.
Unauthorized reproduction or disclosure of this information in whole or in part is strictly prohibited.

1.6 FM Features

- 65-108MHz worldwide FM bands with 50KHz tuning step
- Supports RDS/RBDS radio data system
- Digital stereo demodulator
- Adaptive FM demodulator for both high- and low-quality scenarios
- Low sensitivity level with superior interference rejection
- Programmable de-emphasis (bypass/50µS/75µS)
- Stereophonic multiplex signal (MPX) signal detection and demodulation
- Superior stereo noise reduction and soft mute volume control
- Audio dynamic range control
- Mono/stereo blending
- Audio sensitivity3dBµVemf (SINAD=26dB)
- Audio SINAD≥60dB
- Supports Anti-jamming algorithm
- Supports short antenna

MEDIATEK CONFIDENTIAL
FOR dengzhenli@ far-sightedmobile.com USE ONLY

This document contains information that is proprietary to MediaTek Inc.
Unauthorized reproduction or disclosure of this information in whole or in part is strictly prohibited.

1.7 General Descriptions

Figure 2 is the block diagram of MT6261A. Based on a multi-processor architecture, MT6261A integrates an ARM7EJ-S™ core, the main processor running high-level GSM protocol software as well as multimedia applications, single digital signal processor core, which manages the low-level MODEM and advanced audio functions, an embedded processor running Bluetooth baseband and link control protocol and the Bluetooth radio control.

MT6261A consists of the following subsystems:

- Microcontroller Unit (MCU) subsystem: Includes an ARM7EJ-S™ RISC processor and its accompanying memory management and interrupt handling logics
- Digital Signal Processor (DSP) subsystem: Includes a DSP and its accompanying memory, memory controller and interrupt controller
- MCU/DSP interface: Junction at which the MCU and the DSP exchange hardware and software information
- Microcontroller peripherals: Include all user interface modules and RF control interface modules
- Microcontroller coprocessors: Run computing-intensive processes in place of the microcontroller
- DSP peripherals: Hardware accelerators for GSM/GPRS channel codec
- Multimedia subsystem: Integrates several advanced accelerators to support multimedia applications
- Voice front-end: Data path for converting analog speech to and from digital speech
- Audio front-end: Data path for converting stereo audio from an audio source
- Baseband front-end: Data path for converting a digital signal to and from an analog signal from the RF modules
- Timing generator: Generates the control signals related to the TDMA frame timing
- Power, reset and clock subsystem: Manage the power, reset and clock distribution inside MT6261A.
- Bluetooth subsystem: Includes an embedded processor with embedded ROM/RAM system, baseband processor, and a high-performance radio block
- Power management unit: Self-contained power supply source which also controls the charging and system startup circuitry.

Details of the individual subsystems and blocks are described in the following chapters.

This document contains information that is proprietary to MediaTek Inc.
Unauthorized reproduction or disclosure of this information in whole or in part is strictly prohibited.
MEDIATEK CONFIDENTIAL FOR dengzhenli@far-sightedmobile.com USE ONLY

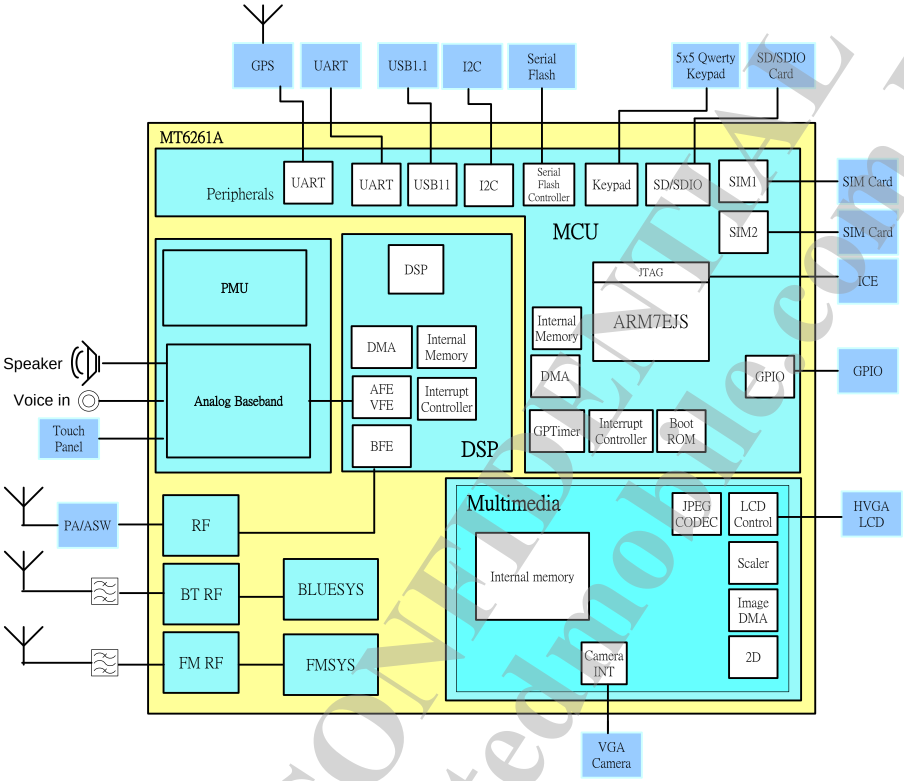

Figure 2. MT6261A block diagram

MEDIATEK CONFIDENTIAL FOR dengzhenli@ far-sightedmobile.com USE ONLY

This document contains information that is proprietary to MediaTek Inc.
Unauthorized reproduction or disclosure of this information in whole or in part is strictly prohibited.

2 Product Descriptions

2.1 Pin Description

2.1.1 Ball Diagram

For MT6261A, an TFBGA 8.1mm*7.6mm, 145-ball, 0.5mm pitch package is offered. Pin-outs and the top view are illustrated in **Figure 3** for this package.

	1	2	3	4	5	6	7	8	9	10	11	12	13	14	15	16	
A	RXLB	AVSS_2G	XTAL1	XTAL2		AVSS_BT	BT_LNA		BPI_BUS2	CMCSD0		CMRST	KCOL1		KROW1	KROW0	A
B		RXHB	EINT	AVSS_2G	GPIO_11	FREF	AVSS_BT	BPI_BUS1	BPI_BUS0	CMMCLK	CMCSK	CMPDN	KCOL0		KROW2		B
C	TX_LB	AVSS_2G			SRCLKENAI			AVDD15_BTRF	CMCSD1			VDDK	KCOL2	KCOL3	KROW3	KROW4	C
D	AVSS_2G	TX_HB		GPIO_10	EXT_CLK_SEL			VIO28	SDA28			GND		KCOL4	URXD1	UTXD1	D
E		AVSS44_ALDO			VRF			SCL28	GND			GND	GND	GPIO_0	GPIO_1		E
F	AVSS_FM	FM_ANT_P								GND					GPIO_2	GPIO_3	F
G	VREF	PWRKEY	VBAT_VA	VCAMA	TESTMODE	AVSS44_ALDO	GND	GND	GND						GPIO_5	GPIO_4	G
H		CHRLDO	BATSNS	ISENSE				GND	GND			GPIO_9	GPIO_8	GPIO_7	GPIO_6		H
J	VCDT	BATON							GND			GND	RESETB	VSF	LSCE_B	LSRSTB	J
K	DRV	KPLED	ISINK							GND					LSDA	LSCK	K
L		AVSS44_PMU		AVDD25_V2P5			AU_MICBIAS0	ACCDET		AVSS44_DLDO					LSA0		L
M	SPK_OUTN	AVSS_SPK		VSBST	VSBST		AU_VIN0_P	APC			SIM1_SIO	VIO18	SIM2_SIO	VSIM2	LPTE	SIM2_SRST	M
N	SPK_OUTP	AVSS_SPK		AVSS44_BOOST	AVSS44_BOOST		AU_VIN0_N	AUXIN4			VUSB		MCDA3	MCCM0	MCDA1	SIM2_SCLK	N
P		AVDD_SPK		VSBST_OUT	AVSS28_ABB	AU_VIN1_P	AU_VIN1_N	VCORE	VRTC	USB11_DM	USB11_DP	SIM1_SCLK	MCDA2		MCDA0		P
R	AU_HPR	AU_HPL	AU_HSP	AU_HSN	VA		AVSS28_ABB		VBAT_DIGITAL	VIBR		SIM1_SRST	VSIM1		MCCK	VMC	R
	1	2	3	4	5	6	7	8	9	10	11	12	13	14	15	16	

Figure 3. Ball diagram and top view

2.1.2 Pin Coordination

Table 1. Pin coordinates

Pin#	Net name	Pin#	Net name	Pin#	Net name

This document contains information that is proprietary to MediaTek Inc.
Unauthorized reproduction or disclosure of this information in whole or in part is strictly prohibited.

Pin#	Net name	Pin#	Net name	Pin#	Net name
A1	RXLB	D16	UTXD1	J1	VCDT
A10	CMCSD0	D2	TX_HB	J12	GND
A12	CMRST	D4	GPIO_10	J13	RESETB
A13	KCOL1	D5	EXT_CLK_SEL	J14	VSF
A15	KROW1	D8	VIO28	J15	LSCE_B
A16	KROW0	D9	SDA28	J16	LSRSTB
A2	AVSS_2G	E12	GND	J2	BATON
A3	XTAL1	E13	GND	J9	GND
A4	XTAL2	E14	GPIO_0	K1	DRV
A6	AVSS_BT	E15	GPIO_1	K10	GND
A7	BT_LNA	E2	AVSS44_ALDO	K15	LSDA
A9	BPI_BUS2	E5	VRF	K16	LSCK
B10	CMMCLK	E8	SCL28	K2	KPLED
B11	CMCSK	E9	GND	K3	ISINK
B12	CMPDN	F1	AVSS_FM	L10	AVSS44_DLDO
B13	KCOL0	F10	GND	L15	LSA0
B15	KROW2	F15	GPIO_2	L2	AVSS44_PMU
B2	RXHB	F16	GPIO_3	L4	AVDD25_V2P5
B3	EINT	F2	FM_ANT_P	L7	AU_MICBIAS0
B4	AVSS_2G	G1	VREF	L8	ACCDET
B5	GPIO_11	G15	GPIO_5	M1	SPK_OUTN
B6	FREF	G16	GPIO_4	M11	SIM1_SIO
B7	AVSS_BT	G2	PWRKEY	M12	VIO18
B8	BPI_BUS1	G3	VBAT_VA	M13	SIM2_SIO
B9	BPI_BUS0	G4	VCAMA	M14	VSIM2
C1	TX_LB	G5	TESTMODE	M15	LPTE
C12	VDDK	G6	AVSS44_ALDO	M16	SIM2_SRST
C13	KCOL2	G7	GND	M2	AVSS_SPK
C14	KCOL3	G8	GND	M4	VSBST
C15	KROW3	G9	GND	M5	VSBST
C16	KROW4	H12	GPIO_9	M7	AU_VIN0_P
C2	AVSS_2G	H13	GPIO_8	M8	APC
C5	SRCLKENAI	H14	GPIO_7	N1	SPK_OUTP
C8	AVDD15_BTRF	H15	GPIO_6	N11	VUSB
C9	CMCSD1	H2	CHRLDO	N13	MCDA3
D1	AVSS_2G	H3	BATSNS	N14	MCCM0
D12	GND	H4	ISENSE	N15	MCDA1
D14	KCOL4	H8	GND	N16	SIM2_SCLK
D15	URXD1	H9	GND	N2	AVSS_SPK
N4	AVSS44_BOOST	P4	VSBST_OUT	R15	MCCK
N5	AVSS44_BOOST	P5	AVSS28_ABB	R16	VMC
N7	AU_VIN0_N	P6	AU_VIN1_P	R2	AU_HPL
N8	AUXIN4	P7	AU_VIN1_N	R3	AU_HSP
P10	USB11_DM	P8	VCORE	R4	AU_HSN

This document contains information that is proprietary to MediaTek Inc.
Unauthorized reproduction or disclosure of this information in whole or in part is strictly prohibited.
MEDIATEK CONFIDENTIAL FOR designer@far-sightmobile.com USE ONLY

Pin#	Net name	Pin#	Net name	Pin#	Net name
P11	USB11_DP	P9	VRTC	R5	VA
P12	SIM1_SCLK	R1	AU_HPR	R7	AVSS28_ABB
P13	MCDA2	R10	VIBR	R9	VBAT_DIGITAL
P15	MCDA0	R12	SIM1_SRST		
P2	AVDD_SPK	R13	VSIM1		

MEDIATEK CONFIDENTIAL FOR dengzhenli@far-sightedmobile.com USE ONLY

This document contains information that is proprietary to MediaTek Inc.
Unauthorized reproduction or disclosure of this information in whole or in part is strictly prohibited.

2.1.3 Detailed Pin Description

Table 2. Acronym for pin types

Abbreviation	Description
AI	Analog input
AO	Analog output
AIO	Analog bi-direction
DI	Digital input
DO	Digital output
DIO	Digital bi-direction
P	Power
G	Ground

Table 3. PIN function description and power domain

Pin name	Type	Description	Power domain
System			
RESETB	DIO	System reset	DVDD18_EMI
SRCLKENAI	DIO	26MHz clock request by external devices	VRF
EINT	DIO	External Interrupt	VRF
GPIO_0	DIO	General purpose input /output 0	DVDD28
GPIO_1	DIO	General purpose input /output 1	DVDD28
GPIO_2	DIO	General purpose input /output 2	DVDD28
GPIO_3	DIO	General purpose input /output 3	DVDD28
GPIO_4	DIO	General purpose input /output 4	DVDD28
GPIO_5	DIO	General purpose input /output 5	DVDD28
GPIO_6	DIO	General purpose input /output 6	DVDD28
GPIO_7	DIO	General purpose input /output 7	DVDD28
GPIO_8	DIO	General purpose input /output 8	DVDD28
GPIO_9	DIO	General purpose input /output 9	DVDD28
GPIO_10	DIO	General purpose input /output 10	VRF
GPIO_11	DIO	General purpose input /output 11	VRF
RF control circuitro			
BPI_BUS0	DIO	RF hard-wire control bus bit 0	DVDD28
BPI_BUS1	DIO	RF hard-wire control bus bit 1	DVDD28
BPI_BUS2	DIO	RF hard-wire control bus bit 2	DVDD28
UART interface			
URXD1	DIO	UART1 receive data	DVDD28
UTXD1	DIO	UART1 transmit data	DVDD28
Keypad interface			
KCOL0	DIO	Keypad column 0	DVDD28
KCOL1	DIO	Keypad column 1	DVDD28
KCOL2	DIO	Keypad column 2	DVDD28
KCOL3	DIO	Keypad column 3	DVDD28
KCOL4	DIO	Keypad column 4	DVDD28
KROW0	DIO	Keypad row 0	DVDD28

This document contains information that is proprietary to MediaTek Inc.
Unauthorized reproduction or disclosure of this information in whole or in part is strictly prohibited.
MEDIATEK CONFIDENTIAL FOR dengzhenli@far-sightedmobile.com USE ONLY

KROW1	DIO	Keypad row 1	DVDD28
KROW2	DIO	Keypad row 2	DVDD28
KROW3	DIO	Keypad row 3	DVDD28
KROW4	DIO	Keypad row 4	DVDD28
Camera interface			
CMRST	DIO	CMOS sensor reset signal output	DVDD28
CMPDN	DIO	CMOS sensor power down control	DVDD28
CMCSD0	DIO	CMOS sensor data input 0	DVDD28
CMCSD1	DIO	CMOS sensor data input 1	DVDD28
CMMCLK	DIO	CMOS sensor pixel clock input	DVDD28
CMCSK	DIO	CMOS sensor pixel clock output	DVDD28
MS/SD card interface			
MCDA0	DIO	SD serial data IO 0/memory stick serial data IO	DVDD33_MSDC
MCDA1	DIO	SD serial data IO 1/memory stick serial data IO	DVDD33_MSDC
MCDA2	DIO	SD serial data IO 2/memory stick serial data IO	DVDD33_MSDC
MCDA3	DIO	SD serial data IO 3/memory stick serial data IO	DVDD33_MSDC
MCCK	DIO	SD serial clock/memory stick serial clock	DVDD33_MSDC
MCCM0	DIO	SD command output/memory stick bus state output	DVDD33_MSDC
SIM card interface			
SIM1_SIO	DIO	SIM1 data input/outputs	VSIM1
SIM1_SRST	DIO	SIM1 card reset output	VSIM1
SIM1_SCLK	DIO	SIM1 card clock output	VSIM1
SIM2_SIO	DIO	SIM2 data input/outputs	VSIM2
SIM2_SRST	DIO	SIM2 card reset output	VSIM2
SIM2_SCLK	DIO	SIM2 card clock output	VSIM2
I2C interface			
SCL28	DIO	I2C clock 2.8v power domain	DVDD28
SDA28	DIO	I2C data 2.8v power domain	DVDD28
LCD interface			
LSRSTB	DIO	Serial display interface reset signal	DVDD18_EMI
LSCE_B	DIO	Serial display interface chip select output	DVDD18_EMI
LSCK	DIO	Serial display interface clock	DVDD18_EMI
LSDA	DIO	Serial display interface data	DVDD18_EMI
LSA0	DIO	Serial display interface address	DVDD18_EMI
LPTE	DIO	Serial display tearing signal	DVDD18_EMI
FM			
FM_ANT_P	AI	FM input from antenna	VCAMA
Bluetooth			
BT_LNA	AIO	Bluetooth RF single-ended input	DVDD28
2G RF			
RXHB	AI	RF input for highband Rx (DCS/PCS)	VRF
RXLB	AI	RF input for lowband Rx (GSM900/GSM850)	VRF
TX_HB	AO	RF output for highband Tx (DCS/PCS)	VRF

This document contains information that is proprietary to MediaTek Inc.
Unauthorized reproduction or disclosure of this information in whole or in part is strictly prohibited.
MEDIATEK CONFIDENTIAL FOR dengzhenli@fae-sinotecmobile.com USE ONLY

TX_LB	AO	RF output pin for lowband Tx (GSM900/GSM850)	VRF
FREF	AO	DCXO reference clock output	VRF
XTAL1	AIO	Input 1 for DCXO crystal	VRF
XTAL2	AIO	Input 2 for DCXO crystal	VRF
EXT_CLK_SEL	AIO	DCXO mode selection	VRF
USB			
USB11_DM	AIO	D- data input/output	-
USB11_DP	AIO	D+ data input/output	-
Analog baseband			
AU_HPR	AIO	Audio head phone output (R channel)	AVDD28_ABB
AU_HPL	AIO	Audio head phone output (L channel)	AVDD28_ABB
AU_HSP	AIO	Voice handset output (positive)	AVDD28_ABB
AU_HSN	AIO	Voice handset output (negative)	AVDD28_ABB
AU_VIN0_P	AIO	Microphone 0 input (positive)	AVDD28_ABB
AU_VIN0_N	AIO	Microphone 0 input (negative)	AVDD28_ABB
AU_VIN1_P	AIO	Microphone 1 input (positive)	AVDD28_ABB
AU_VIN1_N	AIO	Microphone 1 input (negative)	AVDD28_ABB
AUX_IN4	AIO	Auxiliary ADC input	AVDD28_ABB
SPK_OUTP	AIO	Speaker positive output	VBAT_SPK
SPK_OUTN	AIO	Speaker negative output	VBAT_SPK
APC	AIO	Automatic power control DAC output	AVDD28_ABB
AU_MICBIAS0	AIO	Microphone bias source 0	AVDD28_ABB
ACCDET	AIO	Accessory detection	AVDD28_ABB
Power management unit			
VA	AIO	LDO output for ABB - VA	VBAT_ANALOG
VCAMA	AIO	LDO output for sensor – VCAMA	VBAT_VA
VIBR	AIO	LDO output for vibrator - VIBR	VBAT_DIGITAL
VIO18	AIO	LDO output for 1.8V power - VIO18	VBAT_DIGITAL
VIO28	AIO	LDO output for 2.8V power - VIO28	VBAT_DIGITAL
VMC	AIO	LDO output for memory card - VMC	VBAT_DIGITAL
VSF	AIO	LDO output - VSF	VBAT_DIGITAL
VRF	AIO	LDO output for GSMRF - VRF	VBAT_VA
VRTC	AIO	LDO output for RTC - VRTC	VBAT_DIGITAL
VSIM1	AIO	LDO output for 1st SIM - VSIM	VBAT_DIGITAL
VSIM2	AIO	LDO output for 2nd SIM - VSIM2	VBAT_DIGITAL
VUSB	AIO	LDO output for USB - VUSB	VBAT_DIGITAL
VCORE	AIO	LDO output for core circuit - Vcore	VBAT_DIGITAL
VREF	AIO	Band gap reference	BATSNS
VCDT	AIO	Charger-In level sense pin	BATSNS
DRV	AIO	IDAC current output open-drain pin	BATSNS
BATON	AIO	Battery Pack, NTC connected pin	BATSNS
ISENSE	AIO	Top node of current sensing 0.2ohm Rsense resistor	BATSNS
CHRLDO	AIO	2.8V shunt-regulator output	BATSNS
BATDET	AIO	Battery detection pin	BATSNS
ISINK0	AIO	Backlight driver channel 0	VBAT_VA
KPLED	AIO	Keypad led driver	VBAT_VA

This document contains information that is proprietary to MediaTek Inc.
Unauthorized reproduction or disclosure of this information in whole or in part is strictly prohibited.
MEDIATEK CONFIDENTIAL FOR dengzhenli@fareastmobile.com USE ONLY

VSBST_OUT	AIO	Audio boost output	VSBST
TESTMODE	AIO	Test mode	BATSNS
PWRKEY	AIO	PWR key	BATSNS
AVDD25_V2P5	AIO	Reference voltage for ABT	-
Analog power			
VSBST	P	VBAT input for audio boost	
AVDD15_BTRF	P	BTRF power input	-
VBAT_DIGITAL	P	Digital LDOs used battery voltage input	-
VBAT_VA	P	Analog LDOs used battery voltage input	-
AVDD_SPK	P	Input for loud speaker driver	-
BATSNS	P	Battery node of battery pack	-
AVDD15_BTRF	P	BTRF power input	-
Analog ground			
AVSS28_ABB	G	ABB 2.8V ground	-
AVSS_BT	G	BT ground	-
AVSS_2G	G	2G RF ground	-
AVSS_FM	G	FM ground	-
AVSS44_PMU	G	PMU ground	-
AVSS44_ALDO	G	ALDO ground	-
AVSS44_DLDO	G	DLDO ground	-
AVSS_SPK	G	SPK ground	-
AGND	G	GND for VREF	-
AVSS44_BOOST	G	Audio boost GND	-
Digital power			
VDDK	P	Core power	-
Digital ground			
GND	G	Ground	-

Table 4. Acronym for state of pins

Abbreviation	Description
I	Input
LO	Low output
HO	High output
LO	Low output
PU	Pull-up
PD	Pull-down
-	No PU/PD
0~N	Aux. function number
X	Delicate function pin

Table 5. State of pins

MEDIATEK CONFIDENTIAL FOR dengzhenli@far-sightedmobile.com USE ONLY

This document contains information that is proprietary to MediaTek Inc.
Unauthorized reproduction or disclosure of this information in whole or in part is strictly prohibited.

Name	Reset			Output drivability	Termination when not used	IO type
	State[1]	Aux[2]	PU/PD[3]			
System						
RESETB	HO	1	-	DIOH3/DIOL3	No need	IO Type 3
SRCLKENAI	I	0	PD	DIOH1/DIOL1	No need	IO Type 1
EINT	I	0	PD	DIOH1/DIOL1	No need	IO Type 1
GPIO_0	I	0	PD	DIOH1/DIOL1	No need	IO Type 1
GPIO_1	I	0	PD	DIOH1/DIOL1	No need	IO Type 1
GPIO_2	I	0	PD	DIOH1/DIOL1	No need	IO Type 1
GPIO_3	I	0	PD	DIOH1/DIOL1	No need	IO Type 1
GPIO_4	I	0	PD	DIOH2/DIOL2	No need	IO Type 2
GPIO_5	LO	0	PD	DIOH2/DIOL2	No need	IO Type 2
GPIO_6	LO	0	PD	DIOH2/DIOL2	No need	IO Type 2
GPIO_7	LO	0	PD	DIOH2/DIOL2	No need	IO Type 2
GPIO_8	I	0	PD	DIOH2/DIOL2	No need	IO Type 2
GPIO_9	I	0	PD	DIOH2/DIOL2	No need	IO Type 2
GPIO_10	I	0	PD	DIOH1/DIOL1	No need	IO Type 1
GPIO_11	I	0	PD	DIOH1/DIOL1	No need	IO Type 1
RF control circuitry						
BPI_BUS0	LO	1	PD	DIOH2/DIOL2	No need	IO Type 2
BPI_BUS1	I	1	PD	DIOH2/DIOL2	No need	IO Type 2
BPI_BUS2	I	1	PD	DIOH2/DIOL2	No need	IO Type 2
UART interface						
URXD1	I	1	PU	DIOH3/DIOL3	No need	IO Type 3
UTXD1	HO	1	PU	DIOH2/DIOL2	No need	IO Type 2
Keypad Interface						
KCOL0	I	0	PU	DIOH4/DIOL4	No need	IO Type 4
KCOL1	I	0	PU	DIOH4/DIOL4	No need	IO Type 4
KCOL2	I	0	PU	DIOH4/DIOL4	No need	IO Type 4
KCOL3	I	0	PU	DIOH4/DIOL4	No need	IO Type 4
KCOL4	I	0	PU	DIOH4/DIOL4	No need	IO Type 4
KROW0	I	0	PD	DIOH5/DIOL5	No need	IO Type 5
KROW1	I	0	PD	DIOH5/DIOL5	No need	IO Type 5
KROW2	I	0	PD	DIOH6/DIOL6	No need	IO Type 6
KROW3	I	0	PD	DIOH6/DIOL6	No need	IO Type 6
KROW4	I	0	PD	DIOH6/DIOL6	No need	IO Type 6
Camera interface						

1 The column "State" of "Reset" shows the pin state during reset. (Input, High Output, Low Output, etc)

2 The column "Aux" for "Reset" means the default aux function number, shown in the table "Pin Multiplexing, Capability and Settings".

3 The column "PU/PD" for "Reset" means if there is internal pull-up or pull-down when the pin is input in the reset state.

This document contains information that is proprietary to MediaTek Inc.
Unauthorized reproduction or disclosure of this information in whole or in part is strictly prohibited.

MEDIATEK CONFIDENTIAL FOR dengzhenli@far-sightedmobile.com USE ONLY

Name	Reset			Output drivability	Termination when not used	IO type
	State[1]	Aux[2]	PU/PD[3]			
CMRST	I	0	PD	DIOH2/DIOL2	No need	IO Type 2
CMPDN	HO	0	-	DIOH3/DIOL3	No need	IO Type 3
CMCSD0	I	0	PU	DIOH3/DIOL3	No need	IO Type 3
CMCSD1	I	0	PD	DIOH3/DIOL3	No need	IO Type 3
CMMCLK	I	0	PD	DIOH3/DIOL3	No need	IO Type 3
CMCSK	I	0	PD	DIOH2/DIOL2	No need	IO Type 2
MS/SD card interface						
MCDA0	I	0	PD	DIOH3/DIOL3	No need	IO Type 3
MCDA1	I	0	PD	DIOH3/DIOL3	No need	IO Type 3
MCDA2	I	0	PD	DIOH3/DIOL3	No need	IO Type 3
MCDA3	I	0	PD	DIOH3/DIOL3	No need	IO Type 3
MCCK	I	0	PU	DIOH3/DIOL3	No need	IO Type 3
MCCM0	I	0	PU	DIOH3/DIOL3	No need	IO Type 3
SIM card interface						
SIM1_SIO	I	1	PD	DIOH6/DIOL6	No need	IO Type 6
SIM1_SRST	I	1	PD	DIOH6/DIOL6	No need	IO Type 6
SIM1_SCLK	I	1	PD	DIOH6/DIOL6	No need	IO Type 6
SIM2_SIO	I	1	PD	DIOH6/DIOL6	No need	IO Type 6
SIM2_SRST	I	1	PD	DIOH6/DIOL6	No need	IO Type 6
SIM2_SCLK	I	1	PD	DIOH6/DIOL6	No need	IO Type 6
I2C interface						
SCL28	I	0	PD	DIOH2/DIOL2	No need	IO Type 2
SDA28	I	0	PD	DIOH2/DIOL2	No need	IO Type 2
LCD interface						
LSRSTB	I	0	PD	DIOH3/DIOL3	No need	IO Type 3
LSCE_B	HO	1	-	DIOH3/DIOL3	No need	IO Type 3
LSCK	I	0	PD	DIOH3/DIOL3	No need	IO Type 3
LSDA	I	0	PD	DIOH3/DIOL3	No need	IO Type 3
LSA0	I	0	PD	DIOH3/DIOL3	No need	IO Type 3
LPTE	I	0	PD	DIOH3/DIOL3	No need	IO Type 3

This document contains information that is proprietary to MediaTek Inc.
Unauthorized reproduction or disclosure of this information in whole or in part is strictly prohibited.
MEDIATEK CONFIDENTIAL FOR dengzhenli@fari-sightmobile.com USE ONLY

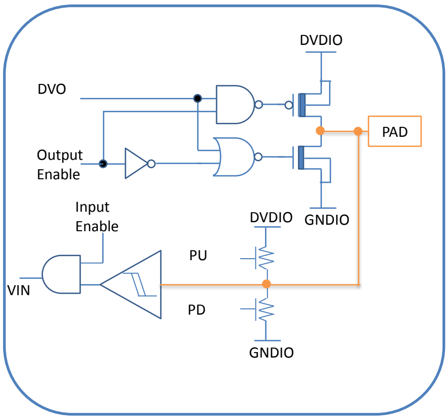

IO type1

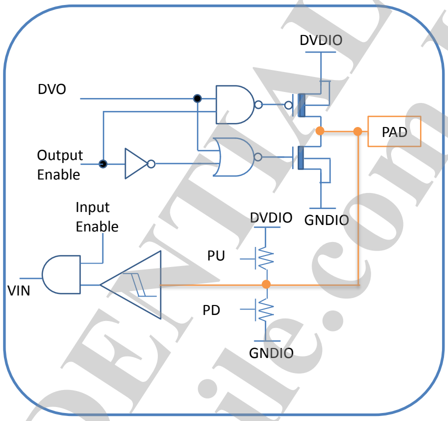

IO type2

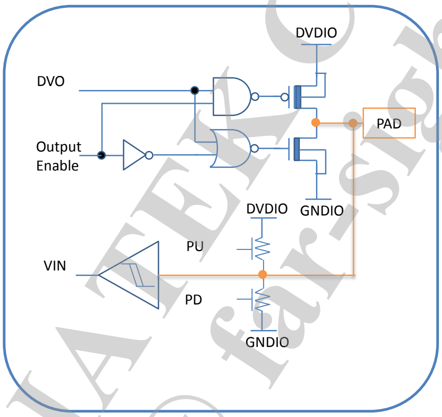

IO type3

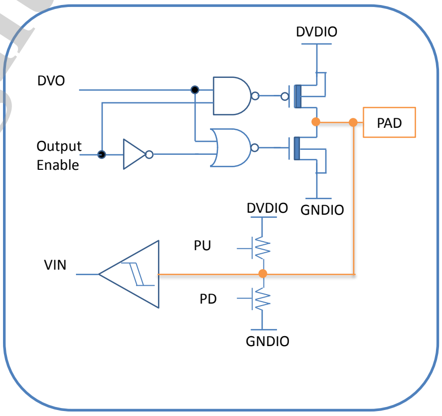

IO type4

MEDIATEK CONFIDENTIAL FOR dengzhenli@ far-sightedmobile.com USE ONLY

This document contains information that is proprietary to MediaTek Inc.
Unauthorized reproduction or disclosure of this information in whole or in part is strictly prohibited.

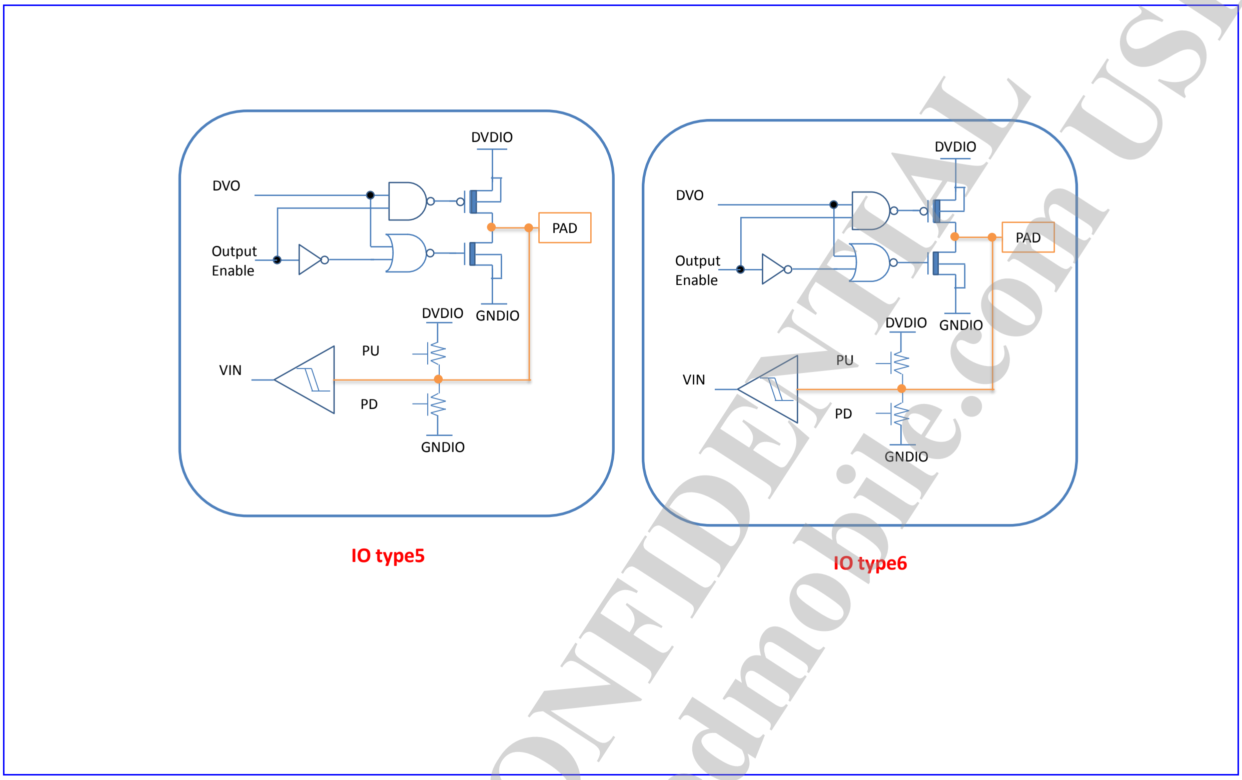

Figure 4. IO types in state of pins

This document contains information that is proprietary to MediaTek Inc.
Unauthorized reproduction or disclosure of this information in whole or in part is strictly prohibited.

MEDIATEK CONFIDENTIAL FOR dengzhenli@ far-sightedmobile.com USE ONLY

2.1.4 Pin Multiplexing, Capability and Settings

Table 6. Acronym for pull-up and pull-down types

Abbreviation	Description
PU	Pull-up, not controllable
PD	Pull-down, not controllable
CU	Pull-up, controllable
CD	Pull-down, controllable
X	Cannot pull-up or pull-down

Table 7. Capability of PU/PD, driving and Schmitt trigger

Name	Aux. function	Aux. name	Aux. type	PU/PD/ CU/CD	Driving	SMT
GPIO_0	0	GPIO0	IO	CU, CD	4, 8, 12, 16mA	0
	1	EINT0	I	CU, CD	4, 8, 12, 16mA	0
	2	XP	AIO	-	4, 8, 12, 16mA	0
	3	U3RXD	I	CU, CD	4, 8, 12, 16mA	0
	4	CMCSD2	I	CU, CD	4, 8, 12, 16mA	0
	5	CMCSK	I	CU, CD	4, 8, 12, 16mA	0
	6	EDIDO	O	CU, CD	4, 8, 12, 16mA	0
	7	JTDI	I	PU	4, 8, 12, 16mA	0
	8	BTJTDI	I	CU, CD	4, 8, 12, 16mA	0
	9	FMJTDI	I	CU, CD	4, 8, 12, 16mA	0
GPIO_1	0	GPIO1	IO	CU, CD	4, 8, 12, 16mA	0
	1	XM	AIO	-	4, 8, 12, 16mA	0
	2	EINT1	I	CU, CD	4, 8, 12, 16mA	0
	3	U3TXD	O	CU, CD	4, 8, 12, 16mA	0
	4	U1CTS	I	CU, CD	4, 8, 12, 16mA	0
	5	CMMCLK	O	CU, CD	4, 8, 12, 16mA	0
	6	EDIDI	I	CU, CD	4, 8, 12, 16mA	0
	7	JTMS	I	PU	4, 8, 12, 16mA	0
	8	BTJTMS	I	CU, CD	4, 8, 12, 16mA	0
	9	FMJTMS	I	CU, CD	4, 8, 12, 16mA	0
GPIO_2	0	GPIO2	IO	CU, CD	4, 8, 12, 16mA	0
	1	EINT2	O	CU, CD	4, 8, 12, 16mA	0
	2	YP	AIO	-	4, 8, 12, 16mA	0
	3	GPSFSYNC	O	CU, CD	4, 8, 12, 16mA	0
	4	PWM0	O	CU, CD	4, 8, 12, 16mA	0

This document contains information that is proprietary to MediaTek Inc.
Unauthorized reproduction or disclosure of this information in whole or in part is strictly prohibited.
MEDIATEK CONFIDENTIAL FOR dengzhenli@far-sightedmobile.com USE ONLY

Name	Aux. function	Aux. name	Aux. type	PU/PD/ CU/CD	Driving	SMT
	5	CMCSD0	I	CU, CD	4, 8, 12, 16mA	0
	6	EDIWS	O	CU, CD	4, 8, 12, 16mA	0
	7	JTRST_B	I	PD	4, 8, 12, 16mA	0
	8	BTJTRSTB	I	CU, CD	4, 8, 12, 16mA	0
	9	FMJTRSTB	I	CU, CD	4, 8, 12, 16mA	0
GPIO_3	0	GPIO3	IO	CU, CD	4, 8, 12, 16mA	0
	1	MCINS	I	CU, CD	4, 8, 12, 16mA	0
	2	YM	AIO	-	4, 8, 12, 16mA	0
	4	PWM1	O	CU, CD	4, 8, 12, 16mA	0
	5	CMCSD1	I	CU, CD	4, 8, 12, 16mA	0
	6	EDICK	O	CU, CD	4, 8, 12, 16mA	0
	7	JTDO	O	CU, CD	4, 8, 12, 16mA	0
	8	BTJTDO	O	CU, CD	4, 8, 12, 16mA	0
	9	FMJTDO	O	CU, CD	4, 8, 12, 16mA	0
GPIO_4	0	GPIO4	IO	CU, CD	4, 8, 12, 16mA	0
	1	EINT3	I	CU, CD	4, 8, 12, 16mA	0
	4	U1RTS	O	CU, CD	4, 8, 12, 16mA	0
GPIO_5	0	GPIO5	IO	CU, CD	4, 8, 12, 16mA	0
	1	EINT4	I	CU, CD	4, 8, 12, 16mA	0
	3	BPI_BUS3	O	CU, CD	4, 8, 12, 16mA	0
GPIO_6	0	GPIO6	IO	CU, CD	4, 8, 12, 16mA	0
	1	EINT5	I	CU, CD	4, 8, 12, 16mA	0
	2	MCINS	I	CU, CD	4, 8, 12, 16mA	0
	3	BPI_BUS4	O	CU, CD	4, 8, 12, 16mA	0
GPIO_7	0	GPIO7	IO	CU, CD	4, 8, 12, 16mA	0
	1	EINT6	I	CU, CD	4, 8, 12, 16mA	0
	3	BPI_BUS5	O	CU, CD	4, 8, 12, 16mA	0
GPIO_8	0	GPIO8	IO	CU, CD	4, 8, 12, 16mA	0
	1	EINT7	I	CU, CD	4, 8, 12, 16mA	0
	2	SCL	IO	CU, CD	4, 8, 12, 16mA	0
GPIO_9	0	GPIO9	IO	CU, CD	4, 8, 12, 16mA	0

This document contains information that is proprietary to MediaTek Inc.
Unauthorized reproduction or disclosure of this information in whole or in part is strictly prohibited.
MEDIATEK CONFIDENTIAL FOR dengzhenli@far-sightedmobile.com USE ONLY

Name	Aux. function	Aux. name	Aux. type	PU/PD/ CU/CD	Driving	SMT
	1	EINT8	I	CU, CD	4, 8, 12, 16mA	0
	2	SDA	IO	CU, CD	4, 8, 12, 16mA	0
URXD1	0	GPIO10	IO	CU, CD	4, 8, 12, 16mA	0
	1	U1RXD	I	PU	4, 8, 12, 16mA	0
	2	CMRST	O	CU, CD	4, 8, 12, 16mA	0
	3	EINT9	I	CU, CD	4, 8, 12, 16mA	0
	4	MCINS	I	CU, CD	4, 8, 12, 16mA	0
UTXD1	0	GPIO11	IO	CU, CD	4, 8, 12, 16mA	0
	1	U1TXD	O	CU, CD	4, 8, 12, 16mA	0
	2	CMPDN	O	CU, CD	4, 8, 12, 16mA	0
	3	EINT10	I	CU, CD	4, 8, 12, 16mA	0
KCOL4	0	GPIO12	IO	CU, CD	4, 8, 12, 16mA	0
	1	KCOL4	IO	-	4, 8, 12, 16mA	0
	2	U2RXD	I	CU, CD	4, 8, 12, 16mA	0
	3	EDIDI	I	CU, CD	4, 8, 12, 16mA	0
	4	FMJTDI	I	CU, CD	4, 8, 12, 16mA	0
	5	JTDI	I	PU	4, 8, 12, 16mA	0
	6	BTJTDI	I	CU, CD	4, 8, 12, 16mA	0
KCOL3	0	GPIO13	IO	CU, CD	4, 8, 12, 16mA	0
	1	KCOL3	IO	-	4, 8, 12, 16mA	0
	2	EINT11	I	CU, CD	4, 8, 12, 16mA	0
	3	PWM0	O	CU, CD	4, 8, 12, 16mA	0
	4	FMJTMS	I	CU, CD	4, 8, 12, 16mA	0
	5	JTMS	I	PU	4, 8, 12, 16mA	0
	6	BTJTMS	I	CU, CD	4, 8, 12, 16mA	0
KCOL2	0	GPIO14	IO	CU, CD	4, 8, 12, 16mA	0
	1	KCOL2	IO	-	4, 8, 12, 16mA	0
	2	EINT12	I	CU, CD	4, 8, 12, 16mA	0
	3	U1RTS	I	CU, CD	4, 8, 12, 16mA	0
KCOL1	0	GPIO15	IO	CU, CD	4, 8, 12, 16mA	0
	1	KCOL1	IO	-	4, 8, 12, 16mA	0
	2	GPSFSYNC	O	CU, CD	4, 8, 12, 16mA	0
	3	U1CTS	I	CU, CD	4, 8, 12, 16mA	0
	4	FMJTCK	I	CU, CD	4, 8, 12, 16mA	0

This document contains information that is proprietary to MediaTek Inc.
Unauthorized reproduction or disclosure of this information in whole or in part is strictly prohibited.
MEDIATEK CONFIDENTIAL FOR dengzhenlia@far-sightedmobile.com USE ONLY

Name	Aux. function	Aux. name	Aux. type	PU/PD/ CU/CD	Driving	SMT
	5	JTCK	I	PU	4, 8, 12, 16mA	0
	6	BTJTCK	I	CU, CD	4, 8, 12, 16mA	0
KCOL0	0	GPIO16	IO	CU, CD	4, 8, 12, 16mA	0
	1	KCOL0	IO	-	4, 8, 12, 16mA	0
KROW4	0	GPIO17	IO	CU, CD	4, 8, 12, 16mA	0
	1	KROW4	IO	-	4, 8, 12, 16mA	0
	2	U2TXD	O	CU, CD	4, 8, 12, 16mA	0
	3	EDICK	O	CU, CD	4, 8, 12, 16mA	0
KROW3	0	GPIO18	IO	CU, CD	4, 8, 12, 16mA	0
	1	KROW3	IO	-	4, 8, 12, 16mA	0
	2	EINT13	I	CU, CD	4, 8, 12, 16mA	0
	3	CLKO0	O	CU, CD	4, 8, 12, 16mA	0
	4	FMJTRSTB	I	CU, CD	4, 8, 12, 16mA	0
	5	JTRST_B	I	PD	4, 8, 12, 16mA	0
	6	BTJTRSTB	I	CU, CD	4, 8, 12, 16mA	0
KROW2	0	GPIO19	IO	CU, CD	4, 8, 12, 16mA	0
	1	KROW2	IO	-	4, 8, 12, 16mA	0
	2	PWM1	O	CU, CD	4, 8, 12, 16mA	0
	3	EDIWS	O	CU, CD	4, 8, 12, 16mA	0
	4	FMJTDO	O	CU, CD	4, 8, 12, 16mA	0
	5	JTDO	O	CU, CD	4, 8, 12, 16mA	0
	6	BTJTDO	O	CU, CD	4, 8, 12, 16mA	0

MEDIATEK CONFIDENTIAL FOR dengzhenli@far-sightedmobile.com USE ONLY

This document contains information that is proprietary to MediaTek Inc.
Unauthorized reproduction or disclosure of this information in whole or in part is strictly prohibited.

Name	Aux. function	Aux. name	Aux. type	PU/PD/ CU/CD	Driving	SMT
KROW1	0	GPIO20	IO	CU, CD	4, 8, 12, 16mA	0
	1	KROW1	IO	-	4, 8, 12, 16mA	0
	2	EINT14	I	CU, CD	4, 8, 12, 16mA	0
	3	EDIDO	O	CU, CD	4, 8, 12, 16mA	0
	4	BTPRI	IO	CU, CD	4, 8, 12, 16mA	0
	5	JTRCK	O	CU, CD	4, 8, 12, 16mA	0
	6	BTDBGACKN	O	CU, CD	4, 8, 12, 16mA	0
KROW0	0	GPIO21	IO	CU, CD	4, 8, 12, 16mA	0
	1	KROW0	IO	-	4, 8, 12, 16mA	0
	5	MCINS	I	CU, CD	4, 8, 12, 16mA	0
	6	BTDBGIN	I	CU, CD	4, 8, 12, 16mA	0
BPI_BUS2	0	GPIO22	IO	CU, CD	4, 8, 12, 16mA	0
	1	BPI_BUS2	O	CU, CD	4, 8, 12, 16mA	0
BPI_BUS1	0	GPIO23	IO	CU, CD	4, 8, 12, 16mA	0
	1	BPI_BUS1	O	CU, CD	4, 8, 12, 16mA	0
BPI_BUS0	0	GPIO24	IO	CU, CD	4, 8, 12, 16mA	0
	1	BPI_BUS0	IO	CU, CD	4, 8, 12, 16mA	0
CMRST	0	GPIO25	IO	CU, CD	4, 8, 12, 16mA	0
	1	CMRST	O	CU, CD	4, 8, 12, 16mA	0
	2	LSRSTB	O	CU, CD	4, 8, 12, 16mA	0
	3	CLKO1	O	CU, CD	4, 8, 12, 16mA	0
	4	EINT15	I	CU, CD	4, 8, 12, 16mA	0
	5	FMJTDI	I	CU, CD	4, 8, 12, 16mA	0
	6	JTDI	I	PU	4, 8, 12, 16mA	0
CMPDN	0	GPIO26	IO	CU, CD	4, 8, 12, 16mA	0
	1	CMPDN	O	CU, CD	4, 8, 12, 16mA	0
	2	LSCK1	O	CU, CD	4, 8, 12, 16mA	0
	3	DAICLK	O	CU, CD	4, 8, 12, 16mA	0
	4	SPICS	IO	CU, CD	4, 8, 12, 16mA	0
	5	FMJTMS	I	CU, CD	4, 8, 12, 16mA	0

This document contains information that is proprietary to MediaTek Inc.
Unauthorized reproduction or disclosure of this information in whole or in part is strictly prohibited.

MEDIATEK CONFIDENTIAL FOR dengzhenli@far-sightedmobile.com USE ONLY

Name	Aux. function	Aux. name	Aux. type	PU/PD/ CU/CD	Driving	SMT
	6	JTDI	I	PU	4, 8, 12, 16mA	0
CMCSD0	0	GPIO27	IO	CU, CD	4, 8, 12, 16mA	0
	1	CMCSD0	I	CU, CD	4, 8, 12, 16mA	0
	2	LSCE_B1	O	CU, CD	4, 8, 12, 16mA	0
	3	DAIPCMIN	I	CU, CD	4, 8, 12, 16mA	0
	4	SPISCK	IO	CU, CD	4, 8, 12, 16mA	0
	5	FMJTCK	I	CU, CD	4, 8, 12, 16mA	0
	6	JTCK	I	PU	4, 8, 12, 16mA	0
	8	MC2CM0	O	-	4, 8, 12, 16mA	0
CMCSD1	0	GPIO28	IO	CU, CD	4, 8, 12, 16mA	0
	1	CMCSD1	I	CU, CD	4, 8, 12, 16mA	0
	2	LSDA1	IO	CU, CD	4, 8, 12, 16mA	0
	3	DAIPCMOUT	O	CU, CD	4, 8, 12, 16mA	0
	4	SPIMOSI	IO	CU, CD	4, 8, 12, 16mA	0
	5	FMJTRSTB	I	CU, CD	4, 8, 12, 16mA	0
	6	JTRST_B	I	PD	4, 8, 12, 16mA	0
	8	MC2CK	O	-	4, 8, 12, 16mA	0
CMMCLK	0	GPIO29	IO	CU, CD	4, 8, 12, 16mA	0
	1	CMMCLK	O	CU, CD	4, 8, 12, 16mA	0
	2	LSA0DA1	O	CU, CD	4, 8, 12, 16mA	0
	3	DAISYNC	O	CU, CD	4, 8, 12, 16mA	0
	4	SPIMISO	IO	CU, CD	4, 8, 12, 16mA	0
	5	FMJTDO	O	CU, CD	4, 8, 12, 16mA	0
	6	JTDO	O	CU, CD	4, 8, 12, 16mA	0
	8	MC2DA0	IO	-	4, 8, 12, 16mA	0
CMCSK	0	GPIO30	IO	CU, CD	4, 8, 12, 16mA	0
	1	CMCSK	I	CU, CD	4, 8, 12, 16mA	0
	2	LPTE	I	CU, CD	4, 8, 12, 16mA	0
	3	CMCSD2	I	CU, CD	4, 8, 12, 16mA	0
	4	EINT16	I	CU, CD	4, 8, 12, 16mA	0
	6	JTRCK	O	CU, CD	4, 8, 12, 16mA	0
MCCK	0	GPIO31	IO	CU, CD	4, 8, 12, 16mA	0
	1	MCCK	O	-	4, 8, 12, 16mA	0
	4	U2RXD	I	CU, CD	4, 8, 12, 16mA	0

This document contains information that is proprietary to MediaTek Inc.
Unauthorized reproduction or disclosure of this information in whole or in part is strictly prohibited.
MEDIATEK CONFIDENTIAL FOR dengzhenlin@far-sightedmobile.com USE ONLY

Name	Aux. function	Aux. name	Aux. type	PU/PD/ CU/CD	Driving	SMT
MCCM0	0	GPIO32	IO	CU, CD	4, 8, 12, 16mA	0
	1	MCCM0	IO	-	4, 8, 12, 16mA	0
	4	U2TXD	O	CU, CD	4, 8, 12, 16mA	0
MCDA0	0	GPIO33	IO	CU, CD	4, 8, 12, 16mA	0
	1	MCDA0	IO	-	4, 8, 12, 16mA	0
	4	DAISYNC	O	CU, CD	4, 8, 12, 16mA	0
MCDA1	0	GPIO34	IO	CU, CD	4, 8, 12, 16mA	0
	1	MCDA1	IO	-	4, 8, 12, 16mA	0
	2	EINT17	I	CU, CD	4, 8, 12, 16mA	0
	4	DAIPCMIN	I	CU, CD	4, 8, 12, 16mA	0
MCDA2	0	GPIO35	IO	CU, CD	4, 8, 12, 16mA	0
	1	MCDA2	IO	-	4, 8, 12, 16mA	0
	2	EINT18	I	CU, CD	4, 8, 12, 16mA	0
	4	DAICLK	O	CU, CD	4, 8, 12, 16mA	0
MCDA3	0	GPIO36	IO	CU, CD	4, 8, 12, 16mA	0
	1	MCDA3	IO	-	4, 8, 12, 16mA	0
	2	EINT19	I	CU, CD	4, 8, 12, 16mA	0
	3	CLKO2	O	CU, CD	4, 8, 12, 16mA	0
	4	DAIPCMOUT	O	CU, CD	4, 8, 12, 16mA	0
SIM1_SIO	0	GPIO37	IO	CU, CD	2, 4, 6, 8mA	0
	1	SIM1_SIO	IO	-	2, 4, 6, 8mA	0
SIM1_SRST	0	GPIO38	IO	CU, CD	2, 4, 6, 8mA	0
	1	SIM1_SRST	IO	-	2, 4, 6, 8mA	0
SIM1_SCLK	0	GPIO39	IO	CU, CD	2, 4, 6, 8mA	0
	1	SIM1_SCLK	IO	-	2, 4, 6, 8mA	0
SIM2_SIO	0	GPIO40	IO	CU, CD	2, 4, 6, 8mA	0
	1	SIM2_SIO	IO	-	2, 4, 6, 8mA	0
	3	U2RTS	O	CU, CD	2, 4, 6, 8mA	0
SIM2_SRST	0	GPIO41	IO	CU, CD	2, 4, 6, 8mA	0
	1	SIM2_SRST	IO	-	2, 4, 6, 8mA	0
	2	CLKO3	O	CU, CD	2, 4, 6, 8mA	0
	3	U2CTS	I	CU, CD	2, 4, 6, 8mA	0
SIM2_SCLK	0	GPIO42	IO	CU, CD	2, 4, 6, 8mA	0
	1	SIM2_SCLK	IO	-	2, 4, 6, 8mA	0

This document contains information that is proprietary to MediaTek Inc.
Unauthorized reproduction or disclosure of this information in whole or in part is strictly prohibited.
MEDIATEK CONFIDENTIAL FOR dengzhenlin@far-sightedmobile.com USE ONLY

Name	Aux. function	Aux. name	Aux. type	PU/PD/ CU/CD	Driving	SMT
	2	LSCE1_B1	O	CU, CD	2, 4, 6, 8mA	0
SCL	0	GPIO43	IO	CU, CD	4, 8, 12, 16mA	0
	1	SCL	IO	CU, CD	4, 8, 12, 16mA	0
SDA	0	GPIO44	IO	CU, CD	4, 8, 12, 16mA	0
	1	SDA	IO	CU, CD	4, 8, 12, 16mA	0
LSRSTB	0	GPIO45	IO	CU, CD	4, 8, 12, 16mA	0
	1	LSRSTB	O	CU, CD	4, 8, 12, 16mA	0
	3	CMRST	O	CU, CD	4, 8, 12, 16mA	0
LSCE_B0	0	GPIO46	IO	CU, CD	4, 8, 12, 16mA	0
	1	LSCE_B0	O	CU, CD	4, 8, 12, 16mA	0
	2	EINT20	I	CU, CD	4, 8, 12, 16mA	0
	3	CMCSD0	I	CU, CD	4, 8, 12, 16mA	0
	4	CLKO4	O	CU, CD	4, 8, 12, 16mA	0
LSCK0	0	GPIO47	IO	CU, CD	4, 8, 12, 16mA	0
	1	LSCK0	O	CU, CD	4, 8, 12, 16mA	0
	3	CMPDN	O	CU, CD	4, 8, 12, 16mA	0
LSDA0	0	GPIO48	IO	CU, CD	4, 8, 12, 16mA	0
	1	LSDA0	IO	-	4, 8, 12, 16mA	0
	2	EINT21	I	CU, CD	4, 8, 12, 16mA	0
	3	CMCSD1	I	CU, CD	4, 8, 12, 16mA	0
	4	WIFITOBT	I	CU, CD	4, 8, 12, 16mA	0
LSA0	0	GPIO49	IO	CU, CD	4, 8, 12, 16mA	0
	1	LSA0DA0	O	-	4, 8, 12, 16mA	0
	2	LSCE1_B0	O	CU, CD	4, 8, 12, 16mA	0
	3	CMMCLK	O	CU, CD	4, 8, 12, 16mA	0
LPTE	0	GPIO50	IO	CU, CD	4, 8, 12, 16mA	0
	1	LPTE	I	CU, CD	4, 8, 12, 16mA	0
	2	EINT22	I	CU, CD	4, 8, 12, 16mA	0
	3	CMCSK	I	CU, CD	4, 8, 12, 16mA	0
	4	CMCSD2	I	CU, CD	4, 8, 12, 16mA	0
	6	MCINS	I	CU, CD	4, 8, 12, 16mA	0
	9	CLKO5	O	CU, CD	4, 8, 12, 16mA	0
RESETB	0	GPIO51	IO	CU, CD	4, 8, 12, 16mA	0
	1	RESETB	IO	CU, CD	4, 8, 12, 16mA	0

This document contains information that is proprietary to MediaTek Inc.
Unauthorized reproduction or disclosure of this information in whole or in part is strictly prohibited.
MEDIATEK CONFIDENTIAL FOR dengzhenlin@far-sightedmobile.com USE ONLY

Name	Aux. function	Aux. name	Aux. type	PU/PD/ CU/CD	Driving	SMT
EINT	0	AGPI52	I	CU, CD	8mA	0
	2	EINT23	I	CU, CD	8mA	0
SRCLKENAI	0	AGPI53	I	CU, CD	8mA	0
	1	SRCLKENAI	I	CU, CD	8mA	0
	2	EINT24	I	-	8mA	0
GPIO_10	0	AGPIO54	IO	CU, CD	8mA	0
GPIO_11	0	AGPIO55	IO	CU, CD	8mA	0

2.2 Electrical Characteristics

2.2.1 Absolute Maximum Ratings

Table 8. Absolute maximum ratings for power supply

Symbol or pin name	Description	Min.	Max.	Unit
VBAT_DIGITAL	Digital used battery voltage input	-0.3	+4.4	V
VBAT_ANALOG	Analog used battery voltage input	-0.3	+4.4	V
AVDD_SPK	VBAT input for loud speaker driver	-0.3	+5.5	V
VSBST	Boost used battery voltage input	-0.3	+4.4	V
VDDK	1.3v core power	-0.3	+1.43	V

Table 9. Absolute maximum ratings for voltage input

Symbol or pin name	Description	Min.	Max.	Unit
VIN1	Digital input voltage for IO Type 1	-0.3	3.08	V
VIN2	Digital input voltage for IO Type 2	-0.3	3.08	V
VIN3	Digital input voltage for IO Type 3	-0.3	3.63	V
VIN4	Digital input voltage for IO Type 4	-0.3	3.08	V
VIN5	Digital input voltage for IO Type 5	-0.3	3.08	V
VIN6	Digital input voltage for IO Type 6	-0.3	3.08	V
VIN7	Digital input voltage for IO Type 7	-0.3	3.63	V

Table 10. Absolute maximum ratings for storage temperature

Symbol or pin name	Description	Min.	Max.	Unit
Tstg	Storage temperature	-55	125	^{o}C

MEDIATEK CONFIDENTIAL FOR dengzhenli@far-sightedmobile.com USE ONLY

© 2014 MediaTek Inc.

This document contains information that is proprietary to MediaTek Inc.
Unauthorized reproduction or disclosure of this information in whole or in part is strictly prohibited.

2.2.2 Recommended Operating Conditions

Table 11. Recommended operating conditions for power supply

Symbol or pin name	Description	Min.	Typ.	Max.	Unit
VBAT_DIGITAL	Digital used battery voltage input	3.4	3.8	4.2	V
VBAT_ANALOG	Analog used battery voltage input	3.4	3.8	4.2	V
VBAT_SPK	VBAT input for loud speaker driver	3.4	3.8	4.2	V
VBAT_RF	RF used battery voltage input	3.4	3.8	4.2	V
VDDK	1.2v core power	1.17	1.3	1.43	V

Table 12. Recommended operating conditions for voltage input

Symbol or pin name	Description	Min.	Typ.	Max.	Unit
VIN1	Digital input voltage for IO Type 1	-0.3	-	DVDIO+0.3	V
VIN2	Digital input voltage for IO Type 2	-0.3	-	DVDIO+0.3	V
VIN3	Digital input voltage for IO Type 3	-0.3	-	DVDIO+0.3	V
VIN4	Digital input voltage for IO Type 4	-0.3	-	DVDIO+0.3	V
VIN5	Digital input voltage for IO Type 5	-0.3	-	DVDIO+0.3	V
VIN6	Digital input voltage for IO Type 6	-0.3	-	DVDIO+0.3	V
VIN7	Digital input voltage for IO Type 7	-0.3	-	DVDIO+0.3	V

Table 13. Recommended operating conditions for operating temperature

Symbol or pin name	Description	Min.	Typ	Max.	Unit
Tc	Operating temperature	-20	-	85	^{o}C

2.2.3 Electrical Characteristics under Recommended Operating Conditions

Table 14. Electrical characteristics

Symbol	Description	Condition	Min.	Typ.	Max.	Unit
DIIH1	Digital high input current for IO Type 1	PU/PD disabled, DVDIO = 2.8V, 2.1 < VIN1 < 3.1	-5	-	5	µA
		PU enabled, DVDIO = 2.8V, 2.1 < VIN1 < 3.1	-22.5	-	12.5	
		PD enabled, DVDIO = 2.8V, 2.1<VIN1<3.1	6.1	-	82.5	
DIIL1	Digital low input current for IO Type 1	PU/PD disabled, DVDIO = 2.8V, -0.3 < VIN1 < 0.7	-5	-	5	µA
		PU enabled, DVDIO = 2.8V, -0.3 < VIN1 < 0.7	-82.5	-	-6.1	

MEDIATEK CONFIDENTIAL FOR dengzhenli@ farsightedmobile.com USE ONLY

This document contains information that is proprietary to MediaTek Inc.
Unauthorized reproduction or disclosure of this information in whole or in part is strictly prohibited.

Symbol	Description	Condition	Min.	Typ.	Max.	Unit
		PD enabled, DVDIO = 2.8V, -0.3 < VIN1 < 0.7	-12.5	-	22.5	
DIOH1	Digital high output current for IO Type 1	DVOH > 2.38V, DVDIO = 2.8V	-16	-	-	mA
DIOL1	Digital low output current for IO Type 1	DVOL < 0.42V, DVDIO = 2.8V	-	-	16	mA
DRPU1	Digital I/O pull-up resistance for IO Type 1	DVDIO = 2.8V	40	85	190	kΩ
DRPD1	Digital I/O pull-down resistance for IO Type 1	DVDIO = 2.8V	40	85	190	kΩ
DVOH1	Digital output high voltage for IO Type 1	DVDIO = 2.8V	2.38			V
DVOL1	Digital output low voltage for IO Type 1	DVDIO = 2.8V			0.42	V
DIIH2	Digital high input current for IO Type 2	PU/PD disabled, DVDIO = 2.8V, 2.1 < VIN1 < 3.1	-5	-	5	µA
		PU enabled, DVDIO = 2.8V, 2.1 < VIN1 < 3.1	-22.5	-	12.5	
		PD enabled, DVDIO = 2.8V, 2.1<VIN1<3.1	6.1	-	82.5	
		PU/PD disabled, DVDIO = 1.8V, 1.35 < VIN1 < 2.1	-5	-	5	µA
		PU enabled, DVDIO = 1.8V, 1.35 < VIN1 < 2.1	-11.4	-	9.3	
		PD enabled, DVDIO = 1.8V, 1.35 < VIN1 < 2.1	-0.8	-	35	
DIIL2	Digital low input current for IO Type 2	PU/PD disabled, DVDIO = 2.8V, -0.3 < VIN2 < 0.7	-5	-	5	µA
		PU enabled, DVDIO = 2.8V, -0.3 < VIN2 < 0.7	-82.5	-	-6.1	
		PD enabled, DVDIO = 2.8V, -0.3 < VIN2 < 0.7	-12.5	-	22.5	
		PU/PD disabled, DVDIO = 1.8V, -0.3 < VIN1 < 0.45	-5	-	5	µA
		PU enabled, DVDIO = 1.8V, -0.3 < VIN1 < 0.45	-35	-	0.8	

This document contains information that is proprietary to MediaTek Inc.
Unauthorized reproduction or disclosure of this information in whole or in part is strictly prohibited.

MEDIATEK CONFIDENTIAL FOR dengzhenli@far-sightedmobile.com USE ONLY

Symbol	Description	Condition	Min.	Typ.	Max.	Unit
		PD enabled, DVDIO = 1.8V, -0.3 < VIN1 < 0.45	-9.3	-	11.4	
DIOH2	Digital high output current for IO Type 2	DVOH > 2.38V, DVDIO = 2.8V	-16	-	-	mA
		DVOH > 1.53V, DVDIO = 1.8V	-12	-	-	mA
DIOL2	Digital low output current for IO Type 2	DVOL < 0.42V, DVDIO = 2.8V	-	-	16	mA
		DVOL < 0.27V, DVDIO = 1.8V	-	-	12	mA
DRPU2	Digital I/O pull-up resistance for IO Type 2	DVDIO = 2.8V	40	85	190	kΩ
		DVDIO = 1.8V	70	150	320	kΩ
DRPD2	Digital I/O pull-down resistance for IO Type 2	DVDIO = 2.8V	40	85	190	kΩ
		DVDIO = 1.8V	70	150	320	kΩ
DVOH2	Digital output high voltage for IO Type 2	DVDIO = 2.8V	2.38			V
		DVDIO = 1.8V	1.53			V
DVOL2	Digital output low voltage for IO Type 2	DVDIO = 2.8V			0.42	V
		DVDIO = 1.8V			0.27	V
DIIH3	Digital high input current for IO Type 3	PU/PD disabled, DVDIO = 2.8V, 2.1 < VIN3 < 3.1	-5	-	5	µA
		PU enabled, DVDIO = 2.8V, 2.1 < VIN3 < 3.1	-22.5	-	12.5	
		PD enabled, DVDIO = 2.8V, 2.1 < VIN3 < 3.1	6.1	-	82.5	
		PU/PD disabled, DVDIO = 1.8V, 1.35 < VIN3 < 2.1	-5	-	5	µA
		PU enabled, DVDIO = 1.8V, 1.35 < VIN3 < 2.1	-11.4	-	9.3	
		PD enabled, DVDIO = 1.8V, 1.35 < VIN3 < 2.1	-0.8	-	35	
DIIL3	Digital low input current for IO Type 3	PU/PD disabled, DVDIO = 2.8V, -0.3 < VIN3 < 0.7	-5	-	5	µA
		PU enabled, DVDIO = 2.8V, -0.3 < VIN3 < 0.7	-82.5	-	-6.1	
		PD enabled, DVDIO = 2.8V, -0.3 < VIN3 < 0.7	-12.5	-	22.5	

This document contains information that is proprietary to MediaTek Inc.
Unauthorized reproduction or disclosure of this information in whole or in part is strictly prohibited.
MEDIATEK CONFIDENTIAL FOR dengzhenli@ fat-giantedmobile.com USE ONLY

Symbol	Description	Condition	Min.	Typ.	Max.	Unit
		PU/PD disabled, DVDIO = 1.8V, -0.3 < VIN3 < 0.45	-5	-	5	
		PU enabled, DVDIO = 1.8V, -0.3 < VIN3 < 0.45	-35	-	0.8	µA
		PD enabled, DVDIO = 1.8V, -0.3 < VIN3 < 0.45	-9.3	-	11.4	
DIOH3	Digital high output current for IO Type 3	DVOH > 2.38V, DVDIO = 2.8V	-16	-	-	mA
		DVOH > 1.53V, DVDIO = 1.8V	-12	-	-	mA
DIOL3	Digital low output current for IO Type 3	DVOL < 0.42V, DVDIO = 2.8V	-	-	16	mA
		DVOL < 0.27V, DVDIO = 1.8V	-	-	12	mA
DRPU3	Digital I/O pull-up resistance for IO Type 3	DVDIO = 2.8V	10	47	100	kΩ
		DVDIO = 1.8V	10	47	100	kΩ
DRPD3	Digital I/O pull-down resistance for IO Type 3	DVDIO = 1.8V	10	47	100	kΩ
		DVDIO = 2.8V	10	47	100	kΩ
DVOH3	Digital output high voltage for IO Type 3	DVDIO = 2.8V	2.38			V
		DVDIO = 1.8V	1.53			V
DVOL3	Digital output low voltage for IO Type 3	DVDIO = 2.8V			0.42	V
		DVDIO = 1.8V			0.27	V
DIIH4	Digital high input current for IO Type 4	PU/PD disabled, DVDIO = 2.8V, 2.1 < VIN4 < 3.1	-5	-	5	µA
		PU enabled, DVDIO = 2.8V, 2.1 < VIN4 < 3.1	-22.5	-	12.5	
		PD enabled, DVDIO = 2.8V, 2.1 < VIN4 < 3.1	6.1	-	82.5	
DIIL4	Digital low input current for IO Type 4	PU/PD disabled, DVDIO = 2.8V, -0.3 < VIN4 < 0.7	-5	-	5	µA
		PU enabled, DVDIO = 2.8V, -0.3 < VIN4 < 0.7	-82.5	-	-6.1	
		PD enabled, DVDIO = 2.8V, -0.3 < VIN4 < 0.7	-12.5	-	22.5	
DIOH4	Digital high output current for IO Type 4	DVOH > 2.38V, DVDIO = 2.8V	-16	-	-	mA

This document contains information that is proprietary to MediaTek Inc.
Unauthorized reproduction or disclosure of this information in whole or in part is strictly prohibited.

Symbol	Description	Condition	Min.	Typ.	Max.	Unit
DIOL4	Digital low output current for IO Type 4	DVOL < 0.42V, DVDIO = 2.8V	-	-	16	mA
DRPU4	Digital I/O pull-up resistance for IO Type 4 (GPIO mode)	DVDIO = 2.8V	15	36	55	kΩ
DRPD4	Digital I/O pull-down resistance for IO Type 4 (GPIO mode)	DVDIO = 2.8V	15	36	55	kΩ
DRPU4 1200K	Digital I/O pull-up resistance for IO Type 4 (Key PAD mode)	DVDIO = 2.8V	1200	-	-	kΩ
DRPD4 1200K	Digital I/O pull-down resistance for IO Type 4 (Key PAD mode)	DVDIO = 2.8V	1200	-	-	kΩ
DVOH4	Digital output high voltage for IO Type 4	DVDIO = 2.8V	2.38			V
DVOL4	Digital output low voltage for IO Type 4	DVDIO = 2.8V			0.42	V
DIIH5	Digital high input current for IO Type 5	PU/PD disabled, DVDIO = 2.8V, 2.1 < VIN5 < 3.1	-5	-	5	μA
		PU enabled, DVDIO = 2.8V, 2.1 < VIN5 < 3.1	-22.5	-	12.5	
		PD enabled, DVDIO = 2.8V, 2.1 < VIN5 < 3.1	6.1	-	82.5	
DIIL5	Digital low input current for IO Type 5	PU/PD disabled, DVDIO = 2.8V, -0.3 < VIN5 < 0.7	-5	-	5	μA
		PU enabled, DVDIO = 2.8V, -0.3 < VIN5 < 0.7	-82.5	-	-6.1	
		PD enabled, DVDIO = 2.8V, -0.3 < VIN5 < 0.7	-12.5	-	22.5	
DIOH5	Digital high output current for IO Type 5	DVOH > 2.38V, DVDIO = 2.8V	-16	-	-	mA
DIOL5	Digital low output current for IO Type 5	DVOL < 0.42V, DVDIO = 2.8V	-	-	16	mA
DRPU5	Digital I/O pull-up resistance for IO Type 5 (GPIO mode)	DVDIO = 2.8V	15	36	55	kΩ
DRPD5	Digital I/O pull-down resistance for IO Type 5 (GPIO mode)	DVDIO = 2.8V	15	36	55	kΩ
DRPU5 1K	Digital I/O pull-up resistance for IO Type 4 (Key PAD mode)	DVDIO = 2.8V	1	-	-	kΩ

This document contains information that is proprietary to MediaTek Inc.
Unauthorized reproduction or disclosure of this information in whole or in part is strictly prohibited.
MEDIATEK CONFIDENTIAL FOR dengzhiyi@fast-signedmobile.com USE ONLY

Symbol	Description	Condition	Min.	Typ.	Max.	Unit
DRPD5 1K	Digital I/O pull-down resistance for IO Type 4 (Key PAD mode)	DVDIO = 2.8V	1	-	-	kΩ
DVOH5	Digital output high voltage for IO Type 5	DVDIO = 2.8V	2.38			V
DVOL5	Digital output low voltage for IO Type 5	DVDIO = 2.8V			0.42	V
DIIH6	Digital high input current for IO Type 6	PU/PD disabled, DVDIO = 2.8V, 2.1 < VIN6 < 3.1	-5	-	5	μA
		PU enabled, DVDIO = 2.8V, 2.1 < VIN6 < 3.1	-22.5	-	12.5	
		PD enabled, DVDIO = 2.8V, 2.1 < VIN6 < 3.1	6.1	-	82.5	
		PU/PD disabled, DVDIO = 1.8V, 1.35 < VIN6 < 2.1	-5	-	5	μA
		PU enabled, DVDIO = 1.8V, 1.35 < VIN6 < 2.1	-11.4	-	9.3	
		PD enabled, DVDIO = 1.8V, 1.35 < VIN6 < 2.1	-0.8	-	35	
DIIL6	Digital low input current for IO Type 6	PU/PD disabled, DVDIO = 2.8V, -0.3 < VIN6 < 0.7	-5	-	5	μA
		PU enabled, DVDIO = 2.8V, -0.3 < VIN6 < 0.7	-82.5	-	-6.1	
		PD enabled, DVDIO = 2.8V, -0.3 < VIN6 < 0.7	-12.5	-	22.5	
		PU/PD disabled, DVDIO = 1.8V, -0.3 < VIN6 < 0.45	-5	-	5	μA
		PU enabled, DVDIO = 1.8V, -0.3 < VIN6 < 0.45	-35	-	0.8	
		PD enabled, DVDIO = 1.8V, -0.3 < VIN6 < 0.45	-9.3	-	11.4	
DIOH6	Digital high output current for IO Type 6	DVOH > 2.38V, DVDIO = 2.8V	-8	-	-	mA
		DVOH > 1.53V, DVDIO = 1.8V	-6	-	-	mA

This document contains information that is proprietary to MediaTek Inc.
Unauthorized reproduction or disclosure of this information in whole or in part is strictly prohibited.
MEDIATEK CONFIDENTIAL FOR denghenli@fair-unitedmobile.com USE ONLY

Symbol	Description	Condition	Min.	Typ.	Max.	Unit
DIOL6	Digital low output current for IO Type 6	DVOL < 0.42V, DVDIO = 2.8V	-	-	8	mA
		DVOL < 0.27V, DVDIO = 1.8V	-	-	6	mA
DRPU6	Digital I/O pull-up resistance for IO Type 6	DVDIO = 2.8V	40	85	190	kΩ
		DVDIO = 1.8V	70	150	320	kΩ
DRPD6	Digital I/O pull-down resistance for IO Type 6	DVDIO = 2.8V	40	85	190	kΩ
		DVDIO = 1.8V	70	150	320	kΩ
DVOH6	Digital output high voltage for IO Type 6	DVDIO = 2.8V	2.38			V
		DVDIO = 1.8V	1.53			V
DVOL6	Digital output low voltage for IO Type 6	DVDIO = 2.8V			0.42	V
		DVDIO = 1.8V			0.27	V
DIIH7	Digital high input current for IO Type 7	PU/PD disabled, DVDIO = 2.8V, 2.1 < VIN7 < 3.1	-5	-	5	μA
		PU enabled, DVDIO = 2.8V, 2.1 < VIN7 < 3.1	-22.5	-	12.5	
		PD enabled, DVDIO = 2.8V, 2.1<VIN7<3.1	6.1	-	82.5	
		PU/PD disabled, DVDIO = 1.8V, 1.35 < VIN7 < 2.1	-5	-	5	μA
		PU enabled, DVDIO = 1.8V, 1.35 < VIN7 < 2.1	-11.4	-	9.3	
		PD enabled, DVDIO = 1.8V, 1.35 < VIN7 < 2.1	-0.8	-	35	
DIIL7	Digital low input current for IO Type 7	PU/PD disabled, DVDIO = 2.8V, -0.3 < VIN7 < 0.7	-5	-	5	μA
		PU enabled, DVDIO = 2.8V, -0.3 < VIN7 < 0.7	-82.5	-	-6.1	
		PD enabled, DVDIO = 2.8V, -0.3 < VIN7 < 0.7	-12.5	-	22.5	
		PU/PD disabled, DVDIO = 1.8V, -0.3 < VIN7 < 0.45	-5	-	5	μA
		PU enabled, DVDIO = 1.8V, -0.3 < VIN7 < 0.45	-35	-	0.8	

This document contains information that is proprietary to MediaTek Inc.
Unauthorized reproduction or disclosure of this information in whole or in part is strictly prohibited.

Symbol	Description	Condition	Min.	Typ.	Max.	Unit
		PD enabled, DVDIO = 1.8V, -0.3 < VIN7 < 0.45	-5	-	5	
DIOH7	Digital high output current for IO Type 7	DVOH > 2.38V, DVDIO = 2.8V	-16	-	-	mA
		DVOH > 1.53V, DVDIO = 1.8V	-12	-	-	mA
DIOL7	Digital low output current for IO Type 7	DVOL < 0.42V, DVDIO = 2.8V	-	-	16	mA
		DVOL < 0.27V, DVDIO = 1.8V	-	-	12	mA
DRPU7	Digital I/O pull-up resistance for IO Type 7	DVDIO = 2.8V	40	85	190	kΩ
		DVDIO = 1.8V	70	150	320	kΩ
DRPD7	Digital I/O pull-down resistance for IO Type 7	DVDIO = 2.8V	40	85	190	kΩ
		DVDIO = 1.8V	70	150	320	kΩ
DVOH7	Digital output high voltage for IO Type 7	DVDIO = 2.8V	2.38			V
		DVDIO = 1.8V	1.53			V
DVOL7	Digital output low voltage for IO Type 7	DVDIO = 2.8V			0.42	V
		DVDIO = 1.8V			0.27	V

2.3 System Configuration

2.3.1 Strapping Resistors

Table 15. Strapping table

Pin name	Description	Trapping condition
LSA0	Pull-up with 10K resister(Default internal pull-down with 47K resister)	Power-on reset
BPI_BUS1	Pull-up with 10K resister (Default internal pull-down with 75K resister)	Power-on reset
BPI_BUS2	Pull-up with 10K resister (Default internal pull-down with 75K resister)	Power-on reset

2.3.2 Mode Selection

Table 16. Mode selection of chip

Pin name	Description
EXT_CLK_SEL	GND: Uses DCXO as 26M clock source VRF: Uses external clock as 26M clock source
LSA0	GND: Uses 1.8V serial flash device DVDD18_EMI: Uses 3.3V serial flash device
KCOL0	GND: Boots ROM to enter USB download mode DVDD28: Normal boot-up mode
{BPI_BUS1,BPI_BU	{GND, GND}: No JTAG

This document contains information that is proprietary to MediaTek Inc.
Unauthorized reproduction or disclosure of this information in whole or in part is strictly prohibited.
MEDIATEK CONFIDENTIAL FOR dengzhenli@farsightedmobile.com USE ONLY

S2}	{GND, DVDD28}: JTAG at keypad pins {DVDD28, GND}: JTAG at GPIO pins {DVDD28, DVDD28}: JTAG at camera pins

2.4 Power-on Sequence and Protection Logic

MT6261A provides 32K crystal removal feature. The XOSC32_ENB state tells if MT6261A provides this feature or not. VRF will be turned on at the same time with VRTC when XOSC32_ENB = 1. The power-on/off sequence controlled by “Control” and “Reset Generator” is shown as the figure below.

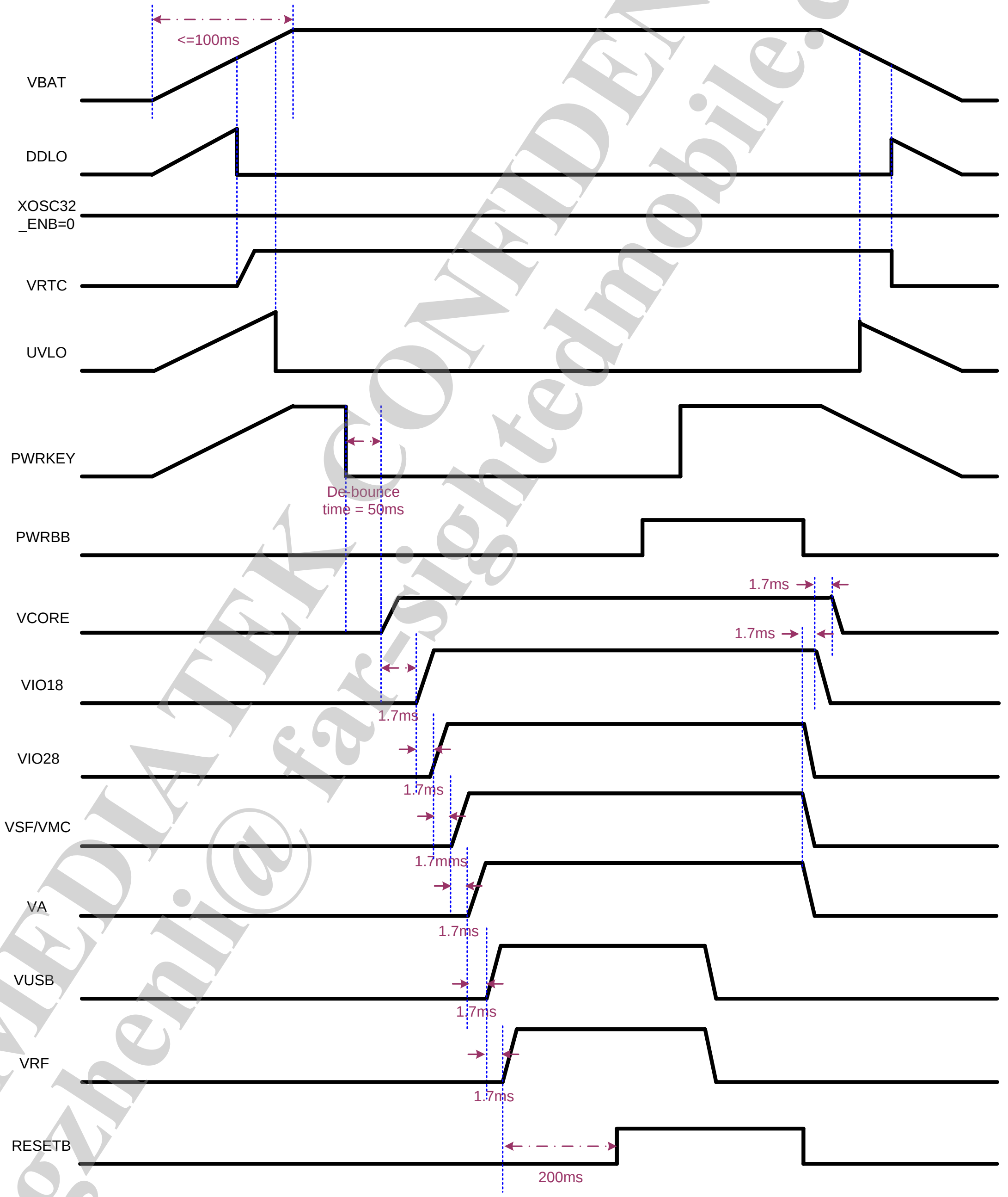

Figure 5. Power-on/off control sequence by pressing PWRKEY and XOSC32_ENB = 0

MEDIATEK CONFIDENTIAL
FOR dengzhenli@far-sightedmobile.com USE ONLY

This document contains information that is proprietary to MediaTek Inc.
Unauthorized reproduction or disclosure of this information in whole or in part is strictly prohibited.

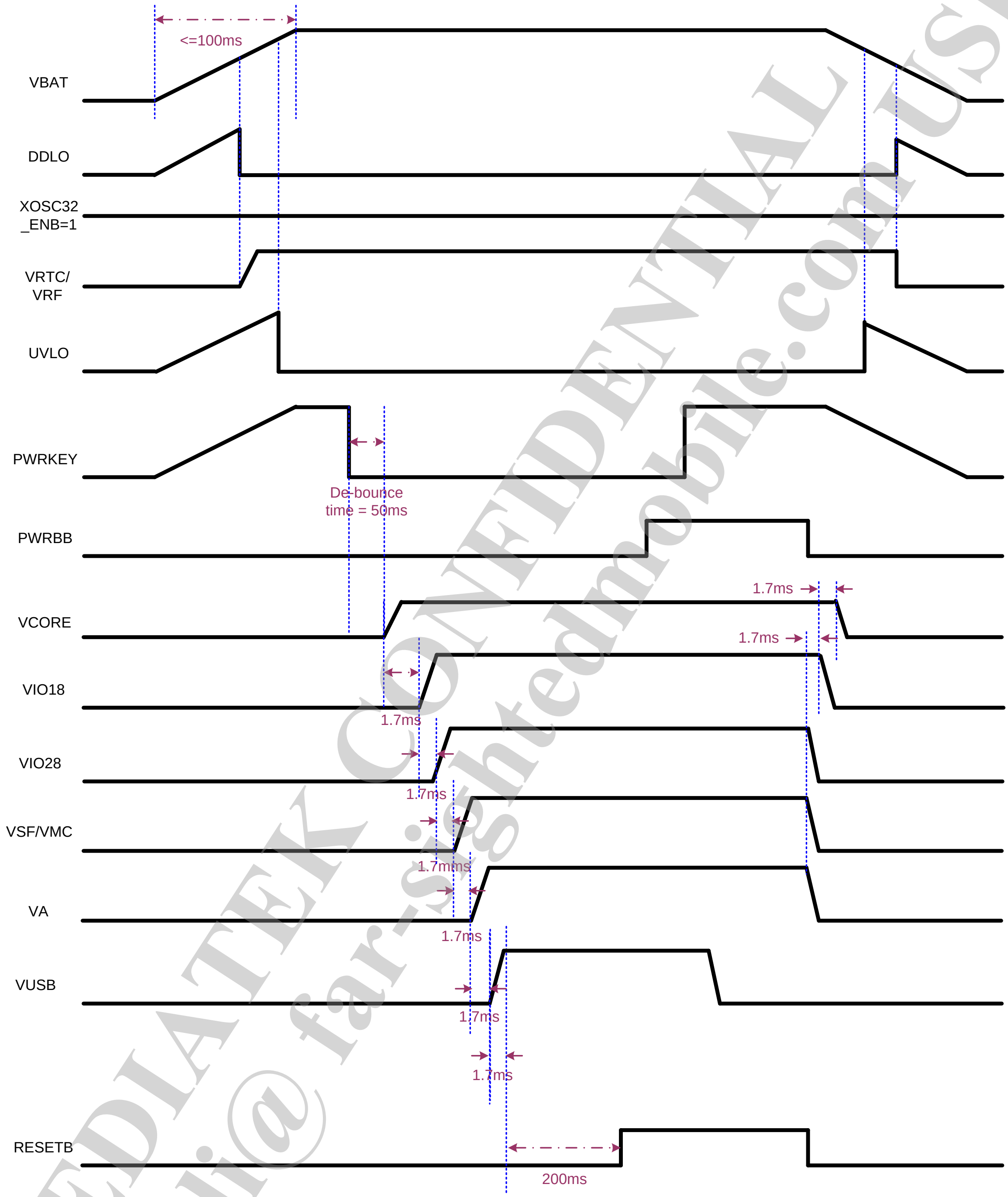

Figure 6. Power-on/off control sequence by pressing PWRKEY and XOSC32_ENB = 1

Note that each of the above figures only shows one power-on/off condition when XOSC32_ENB = 0 or XOSC32_ENB = 1. MT6261A handles the power-on and off of the handset. The following three methods can switch on the handset (when leaving UVLO): XOSC32_ENB = 0

1. Push PWRKEY (Pull the PWRKEY pin to the low level.)

This document contains information that is proprietary to MediaTek Inc.
Unauthorized reproduction or disclosure of this information in whole or in part is strictly prohibited.

MEDIATEK CONFIDENTIAL FOR dengzhenli@ far-sightedmobile.com USE ONLY

Pulling PWRKEY low is the typical way to turn on the handset. The turn-on sequence is VCORE → VIO18 → VIO28 → VSF, VMC → VA → VUSB → VRF.

The supplies for the baseband are ready, and the system reset ends at the moment when the above LDOs are fully turned on to ensure correct timing and function. After that, the baseband will send the PWRBB signal back to the PMU for acknowledgement. To successfully power on the handset, PWRKEY should be kept low until PMU receives PWRBB from the baseband.

2. RTC module generates PWRBB to wake up the system.

   If the RTC module is scheduled to wake up the handset at a certain time, the PWRBB signal will be directly sent to the PMU. In this case, PWRBB will become high at specific moment and allow the PMU to be powered on as the sequence described above. This is called the RTC alarm.

3. Valid charger plug-in (CHRIN voltage is within the valid range.)

   The charger plug-in will also turn on the handset if the charger is valid (no OVP takes place). However, if the battery voltage is too low to power on the handset (UVLO state), the system will not be turned on by any of the three methods. In this case, the charger will charge the battery first and the handset will be powered on automatically as long as the battery voltage is high enough.

Under-voltage lockout (UVLO)

The UVLO state in the PMU prevents startup if the initial voltage of the main battery is below the 3.2V threshold. It ensures that the handset is powered on with the battery in good condition. The UVLO function is performed by a hysteretic comparator which ensures a smooth power-on sequence. In addition, when the battery voltage is getting lower, it will enter the UVLO state, and the PMU will be turned off by itself, except for VRTC LDO, to prevent further discharging. Once the PMU enters the UVLO state, it will draw low quiescent current. The RTC LDO will still be working until the DDLO disables it.

Deep discharge lockout (DDLO)

The PMU will enter the deep discharge lockout (DDLO) state when the battery voltage drops below 2.5V. In this state, the VRTC LDO will be shut down. Otherwise, it will draw very low quiescent current to prevent further discharging or damage to the cells.

Reset

The PMU contains a reset control circuit which takes effect at both power-up and power-down. The RESETB pin is held low in the beginning of power-up and returns to high after the pre-determined delay time. The delay time is controlled by a large counter which uses the clock from internal ring-oscillator. At power-off, the RESETB pin will return to low immediately without any delay.

Over-temperature protection

This document contains information that is proprietary to MediaTek Inc.
Unauthorized reproduction or disclosure of this information in whole or in part is strictly prohibited.
MEDIATEK CONFIDENTIAL FOR dengzhenli@farsightedmobile.com USE ONLY

If the die temperature of PMU exceeds 150°C, the PMU will automatically disable all the LDOs except for VRTC. Once the over-temperature state is resolved, a new power-on sequence will be required to enable the LDOs.

2.5 Analog Baseband

To communicate with analog blocks, a common control interface for all analog blocks is implemented. In addition, there are some dedicated interfaces for data transfer. The common control interface translates the APB bus write and read cycle for specific addresses related to analog front-end control. During the writing or reading of any of these control registers, there is a latency associated with the transfer of data to or from the analog front-end. Dedicated data interface of each analog block is implemented in the corresponding digital block. An analog block includes the following analog functions for the complete GSM/GPRS baseband signal processing:

1. RF control: DAC for Automatic Power Control (APC) is included, and its output is provided to external RF power amplifier respectively.
2. Auxiliary ADC: Provides an ADC for the battery and other auxiliary analog functions monitoring
3. Audio mixed-signal block: Provides complete analog voice signal processing including microphone amplification, A/D conversion, D/A conversion, earphone driver, etc. Dedicated stereo D/A conversion and amplification for audio signals are also included.
4. Clock generation: Includes a clock squarer for shaping the system clock, and PLL providing clock signals to DSP, MCU and USB unit

2.5.1 APC-DAC

2.5.1.1 Block Description

APC-DAC is a 10-bit DAC with output buffer aiming at automatic power control. See the tables below for its analog pin assignment and functional specifications. It is an event-driven scheme for power saving purpose.

2.5.1.2 Functional Specifications

Table 17. APC-DAC specifications

Symbol	Parameter	Min.	Typ.	Max.	Unit
N	Resolution		10		Bit
FS	Sampling rate			1.0833	MSPS

This document contains information that is proprietary to MediaTek Inc.
Unauthorized reproduction or disclosure of this information in whole or in part is strictly prohibited.
MEDIATEK CONFIDENTIAL FOR dengzhenli@ far-sightedmobile.com USE ONLY

Symbol	Parameter	Min.	Typ.	Max.	Unit
SINAD	Signal to noise and distortion ratio (10-kHz sine with 1.0V swing & 100-kHz BW)	47			dB
	99% settling time (full swing on maximal capacitance)			5	μS
	Output swing	0		AVDD	V
	Output capacitance		200	2200	pF
	Output resistance	0.47	10		KΩ
DNL	Differential nonlinearity for code 20 to 970		± 1		LSB
INL	Integral nonlinearity for code 20 to 970		± 1		LSB
DVDD	Digital power supply	1.1	1.2	1.3	V
AVDD	Analog power supply	2.6	2.8	3.0	V
T	Operating temperature	-20		80	°C
	Current consumption Power-up Power-down		 400 1		 μA μA

2.5.2 Auxiliary ADC

2.5.2.1 Block Description

The auxiliary ADC includes the following functional blocks:

1. Analog multiplexer: Selects signal from one of the seven auxiliary input pins. Real-world messages to be monitored, e.g. temperature, should be transferred to the voltage domain.

2. 10-bit A/D converter: Converts the multiplexed input signal to 10-bit digital data.

Channel	Application	Input range [V]
0	BATSNS	3.2 ~ 4.2
1	ISENSE	3.2 ~ 4.2
2	VCDT	Decided by application circuit
3	BATON	0 ~ AVDD28
4	AUXIN4	0 ~ AVDD28
others	Internal use	N/A

2.5.2.2 Functional Specifications

The functional specifications of the auxiliary ADC are listed in the following table.

Table 18. Functional specifications of auxiliary ADC

Symbol	Parameter	Min.	Typ.	Max.	Unit
N	Resolution		10		Bit
FC	Clock rate		1.08		MHz

This document contains information that is proprietary to MediaTek Inc.
Unauthorized reproduction or disclosure of this information in whole or in part is strictly prohibited.
MEDIATEK CONFIDENTIAL FOR dengzhenli@ fat-sightedmobile.com USE ONLY

Symbol	Parameter	Min.	Typ.	Max.	Unit
FS	Sampling rate @ N-Bit		1.08/(N+1)		MSPS
	Input swing	0		AVDD	V
CIN	Input capacitance Unselected channel Selected channel			 50 4	 fF pF
RIN	Input resistance Unselected channel Selected channel	 400 1			 MΩ MΩ
	Clock latency		N+1		1/FC
DNL	Differential nonlinearity		± 1		LSB
INL	Integral nonlinearity		± 1		LSB
OE	Offset error		± 10		mV
FSE	Full swing error		± 10		mV
SINAD	Signal to noise and distortion ratio (10-kHz full swing input & 1.0833-MHz clock rate)		50		dB
DVDD	Digital power supply	1.1	1.2	1.3	V
AVDD	Analog power supply	2.6	2.8	3.0	V
T	Operating temperature	-20		80	°C
	Current consumption Power-up Power-down		 280 1		 μA μA

2.5.3 Audio Mixed-Signal Blocks

2.5.3.1 Block Description

Audio Mixed-signal Blocks (AMB) integrate complete voice uplink/downlink and audio playback functions. As shown in the figure below, it includes three parts. The first consists of stereo audio DACs and audio amplifiers for audio playback. The second part is the voice downlink path, including voice-band DACs (left channel audio DAC) and voice amplifier, which produces voice signals to earphones or other auxiliary output devices. Amplifiers in the two blocks are equipped with multiplexers to accept signals from the internal audio/voice. Moreover, a ClassK amplifier is embedded to support continuous >1W output power with an on-chip charge-pump even under low battery scenario. The last part is the voice uplink path, which is the interface between the microphone (or other auxiliary input device) input and MT6261A DSP. A set of bias voltage is provided for the external electric microphone.

This document contains information that is proprietary to MediaTek Inc.
Unauthorized reproduction or disclosure of this information in whole or in part is strictly prohibited.
MEDIATEK CONFIDENTIAL FOR dengzhenli@far-sightedmobile.com USE ONLY

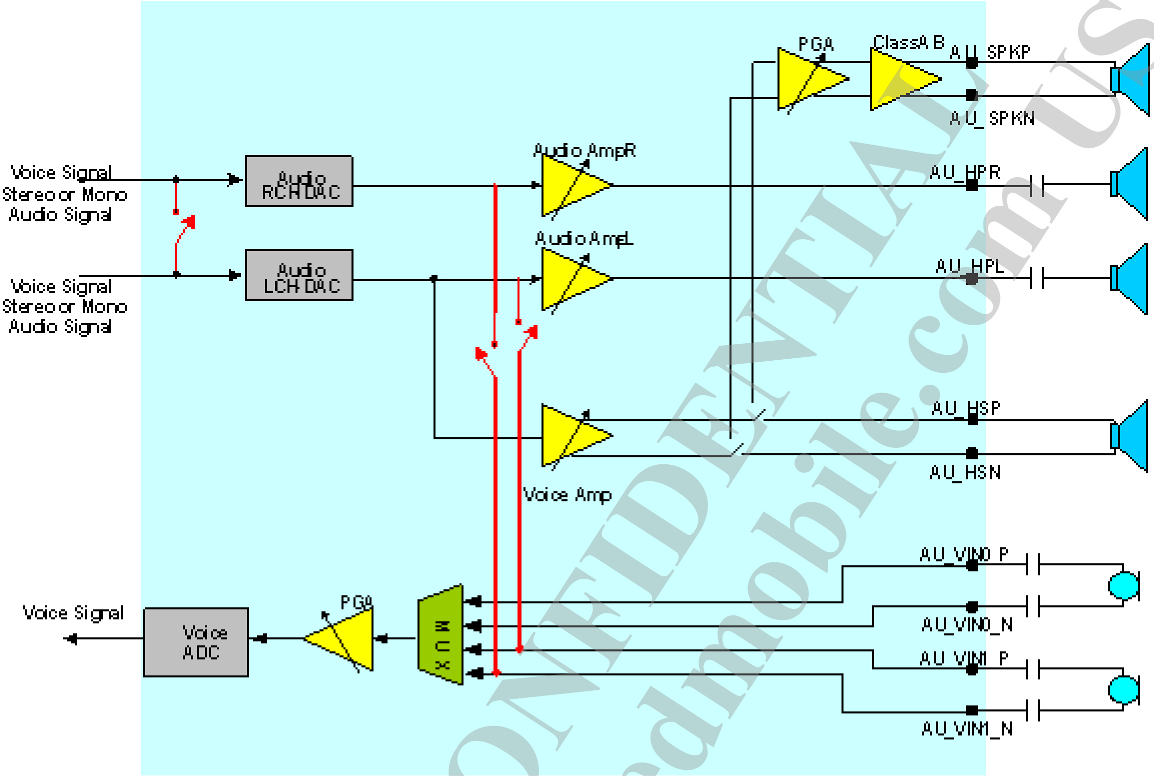

Figure 7. Block diagram of audio mixed-signal blocks

2.5.3.2 Functional Specifications

See the table below for the functional specifications of voice-band uplink/downlink blocks.

Table 19. Functional specifications of analog voice blocks

Symbol	Parameter	Min.	Typ.	Max.	Unit
FS	Sampling rate		6,500		kHz
DVDD	Digital power supply	1.1	1.2	1.3	V
AVDD	Analog power supply	2.6	2.8	3.0	V
T	Operating temperature	-20		80	°C
VMIC	Microphone biasing voltage		1.9	2.2	V
IMIC	Current draw from microphone bias pins			2	mA
Uplink path[7]					
IDC	Current consumption for one channel		1.5		mA
SINAD	Signal to noise and distortion ratio Input level: -40 dbm0 Input level: 0 dbm0	29	 69		dB dB
RIN	Input impedance (differential)	13	20	27	KΩ

[7] For uplink-path, not all gain settings of VUPG meet the specifications listed in the table, especially for several the lowest gains. The minimum gain that meets the specifications is to be determined.

This document contains information that is proprietary to MediaTek Inc.
Unauthorized reproduction or disclosure of this information in whole or in part is strictly prohibited.
MEDIATEK CONFIDENTIAL FOR dengzhenlin@far-sightedmobile.com USE ONLY

Symbol	Parameter	Min.	Typ.	Max.	Unit
ICN	Idle channel noise			-67	dBm0
Downlink path					
IDC	Current consumption		4		mA
SINAD	Signal to noise and distortion ratio Input level: -40 dBm0 Input level: 0 dBm0	29	69		dB dB
RLOAD	Output resistor load (differential)	16	32		Ω
CLOAD	Output capacitor load			250	pF
ICN	Idle channel noise of transmit path			-64	dBPa
XT	Crosstalk level on transmit path			-66	dBm0

See the table below for the functional specifications of audio blocks.

Table 20. Functional specifications of analog audio blocks

Symbol	Parameter	Min.	Typ.	Max.	Unit
FCK	Clock frequency		6.5		MHz
Fs	Sampling rate	32	44.1	48	kHz
AVDD	Power supply	2.6	2.8	3.0	V
T	Operating temperature	-20		80	°C
IDC	Current consumption		4		mA
PSNR	Peak signal to noise ratio		88		dB
DR	Dynamic range		88		dB
VOUT	Output swing for 0dBFS input level @ -1dB headphone gain		0.707		Vrms
$VOUT_{MAX}$	Maximum output swing		2.0		Vpp
THD	Total harmonic distortion 10mW at 64Ω load			-70	dB
RLOAD	Output resistor load (single-ended)	64			Ω
CLOAD	Output capacitor load			250	pF
XT	L-R channel cross talk	70			dB

2.6 Power Management Unit Blocks

The power management unit (PMU) manages the power supply of the entire chip, such as baseband, processor, memory, SIM cards, camera, vibrator, etc. The digital part of PMU is integrated into the analog part (see the figure below). PMU includes the following analog functions for signal processing:

- LDO: Regulates battery voltage to lower voltage level
- BOOST: Boosts battery voltage to target voltage for Class-AB audio amplifier
- Keypad LED driver (KPLED) and current sink (ISINK) switches: Sink current for keypad LED and LCM module
- Start-up (STRUP): Generates power-on/off control sequence of start-up circuits

This document contains information that is proprietary to MediaTek Inc.
Unauthorized reproduction or disclosure of this information in whole or in part is strictly prohibited.
MEDIATEK CONFIDENTIAL FOR dengzhenli@far-sightedmobile.com USE ONLY

- Pulse charger (PCHR): Controls battery charging

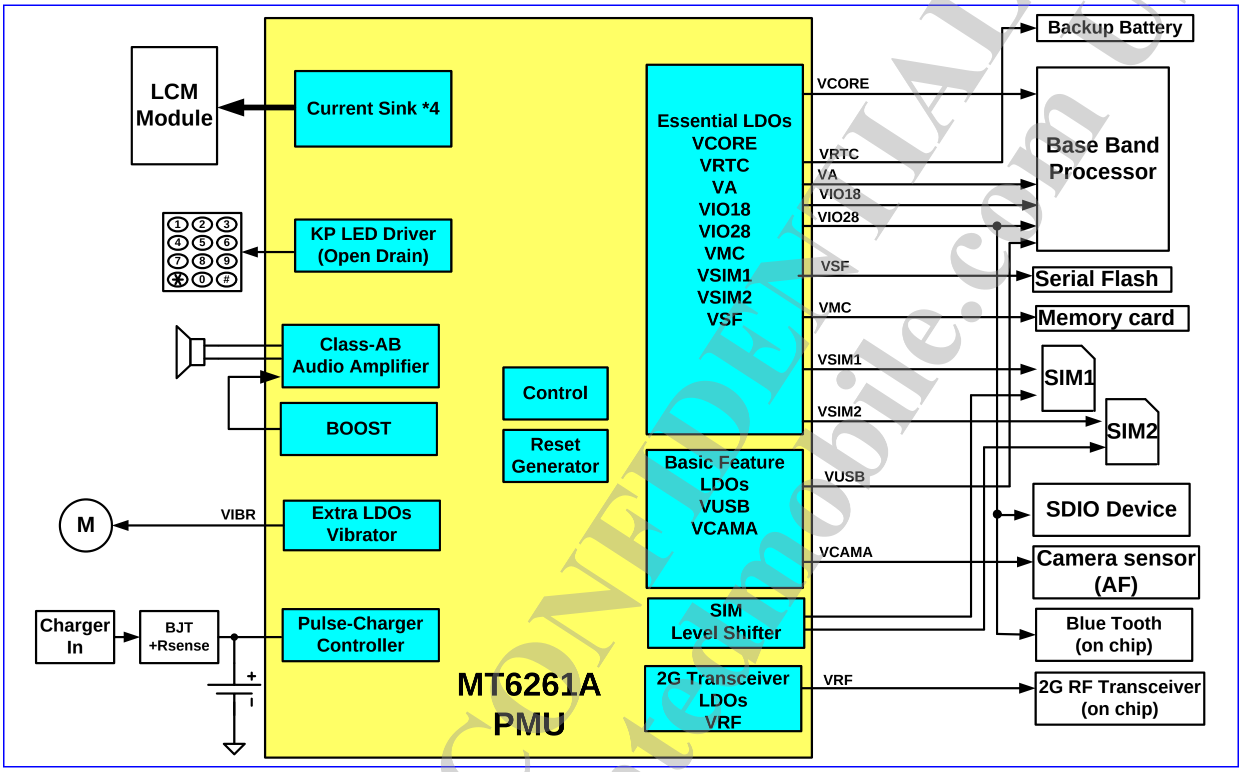

Figure 8. PMU system block diagram.

2.6.1 LDO

PMU integrates 13 general low dropout regulators (LDO) optimized for their given functions by balancing the quiescent current, dropout voltage, line/load regulation, ripple rejection and output noise.

This document contains information that is proprietary to MediaTek Inc.
Unauthorized reproduction or disclosure of this information in whole or in part is strictly prohibited.
MEDIATEK CONFIDENTIAL FOR dengzhenli@ far-sightmobile.com USE ONLY

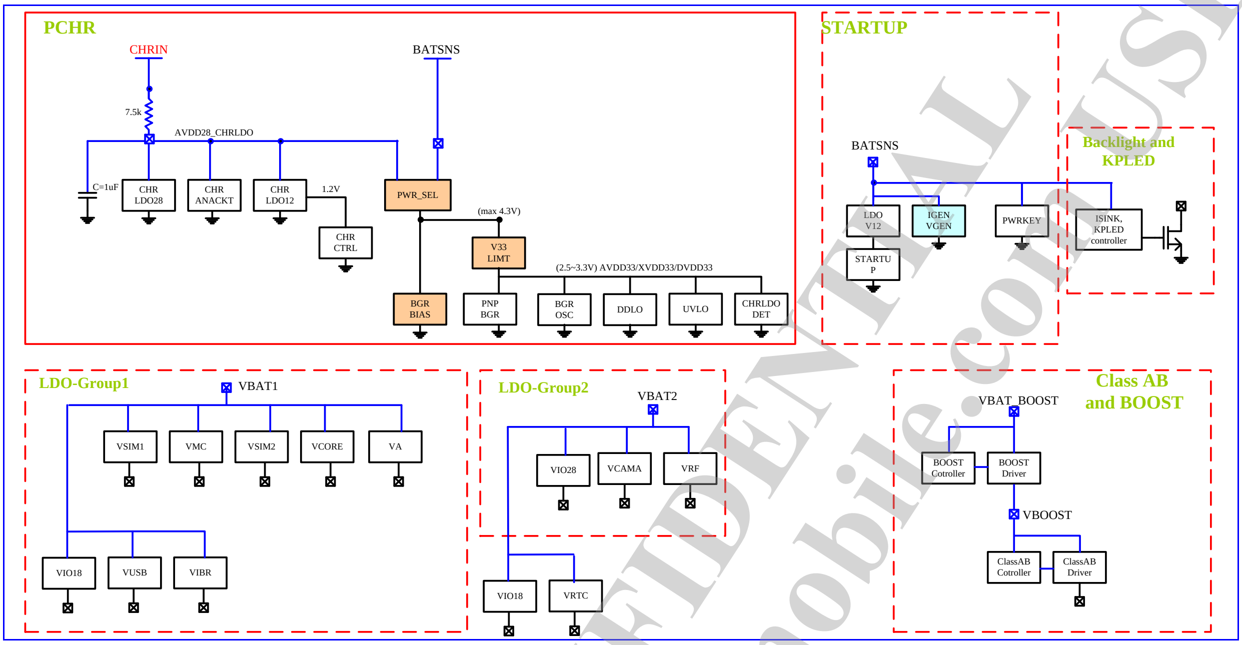

Figure 9. Power domain

2.6.1.1 LDO

A low-dropout regulator (LDO) is capable of maintaining its specified output voltage over a wide range of load current and input voltage, down to a very small difference between input and output voltages.

There are several features in the design of LDO, including discharge control, soft start and current limit. Before LDO is enabled, the output pin of LDO should be discharged first to avoid voltage accumulation on the capacitance. The soft-start limits inrush current and controls output-voltage rising time during the power-up. The current limit is the current protection to limit the LDO's output current and power dissipation.

There are three types of LDOs in PMU of MT6261A PMU. The analog LDO is optimized for low-frequency ripple rejection in order to reject the ripples coming from the burst of RF power amplifier. The digital IO LDO is a linear regulator optimized for very low quiescent current. The single-step RTC LDO is a linear regulator that can charge up a capacitor-type backup coin cell, which also supplies the RTC module even at the absence of the main battery. The single-step LDO features reverse current protection and is optimized for ultra-low quiescent current while sustaining the RTC function as long as possible.

MEDIATEK CONFIDENTIAL
OR dengzhenli@far-sightedmobile.com USE ONL

This document contains information that is proprietary to MediaTek Inc.
Unauthorized reproduction or disclosure of this information in whole or in part is strictly prohibited.

2.6.1.1.1 Block Description

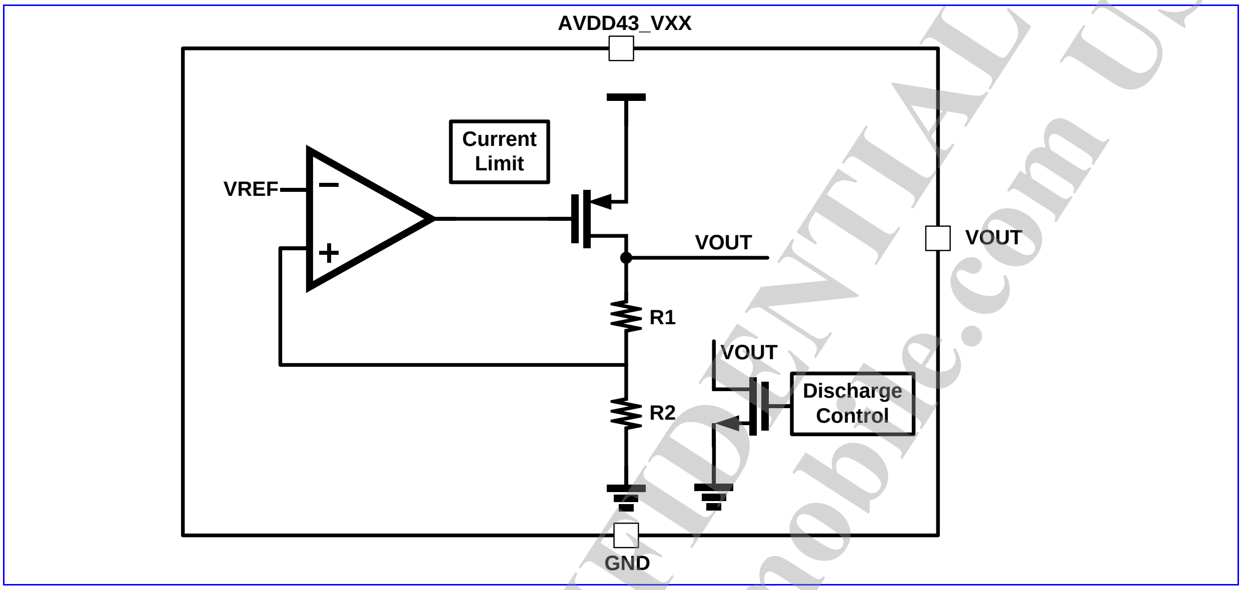

Figure 10. LDO block diagram

2.6.1.1.2 LDO Types

Table 21. LDO types and brief specifications

Type	LDO name	Vout (Volt)	Imax(mA)	Description
ALDO	VRF	2.8	150	RF chip and 26MHz reference clock
ALDO	VA	2.8	150	Analog baseband
ALDO	VCAMA	2.8	70	Camera sensor
DLDO	VIO28	2.8	100	Digital IO and Blue tooth
DLDO	VSIM1	1.8/3.0	30	SIM card
DLDO	VSIM2	1.8/3.0	30	SIM card
DLDO	VUSB	3.3	50	USB
DLDO	VIO18	1.8	100	Digital IO
DLDO	VCORE	0.75~1.35	150	Digital baseband
DLDO	VIBR	1.8/2.8/3.0	100	Vibrator
DLDO	VMC	1.8/2.8/3.0/3.3	100	Memory card
DLDO	VSF	1.86/2.8/3.0/3.3	50	Serial flash
RTCLDO	VRTC	2.8/3.3	2	Real-time clock

2.6.1.1.3 Functional Specifications

Table 22. Analog LDO specifications

Symbol	Description	Condition	Min.	Typ.	Max.	Unit

This document contains information that is proprietary to MediaTek Inc.
Unauthorized reproduction or disclosure of this information in whole or in part is strictly prohibited.
MEDIATEK CONFIDENTIAL FOR dengzhenli@far-sightedmobile.com USE ONLY

Symbol	Description	Condition	Min.	Typ.	Max.	Unit
	Load capacitor			1		µF
	Current limit		1.2*Imax		5*Imax	mA
	Vout	Includes load regulation, line regulation, and temperature coefficient	Max. (-5%, -0.1V)		Max. (+5%, +0.1V)	V
	Transient response	Slew: 15mA/us	Max. (-5%, -0.1V)		Max. (+5%, +0.1V)	V
	Temperature coefficient				100	ppm/C
	PSRR	Iout < 0.5*Imax 10 < f < 3 kHz	65			dB
		Iout < 0.5*Imax 3K < f< 30 kHz	45			dB
	Output noise	With A-weighted filter			90	uVrms
	Quiescent current	Iout = 0		55		µA
	Turn-on overshoot	Iout = 0			Max. (+10%, +0.1V)	V
	Turn-on settling time	Iout = 0			240	µsec

Table 23. Digital LDO specifications

Symbol	Description	Condition	Min.	Typ.	Max.	Unit
	Load capacitor			1[8]		µF
	Current limit		1.2*Imax		5*Imax	mA
	Vout	Includes load regulation, line regulation, and temperature coefficient	Max. (-5%, -0.1V)		Max. (+5%, +0.1V)	V
	Transient response	Slew: 15mA/us	Max. (-5%, -0.1V)		Max. (+5%, +0.1V)	V
	Temperature coefficient				100	ppm/C
	Quiescent current	Iout = 0		30		µA
	Turn-on overshoot	Iout = 0			Max. (+10%, +0.1V)	V
	Turn-on settling time	Iout = 0			240	µs

[8] VCORE loading capacitor typical value is 2.2uF. Other LDOs are 1uF.

This document contains information that is proprietary to MediaTek Inc.
Unauthorized reproduction or disclosure of this information in whole or in part is strictly prohibited.
MEDIATEK CONFIDENTIAL FOR dengzhenli@fulisignedmobile.com USE ONLY

Table 24. RTC LDO specification

Symbol	Description	Condition	Min.	Typ.	Max.	Unit
	Load capacitor			1		µF
	Vout	Includes load regulation, line regulation, and temperature coefficient	2	2.8	3	V
	Temperature coefficient				100	ppm/C
	Quiescent current	Iout = 0		15		µA

2.6.2 BOOST

2.6.2.1 Functional Specifications

Table 25. BOOST specification

Symbol	Description	Condition	Min.	Typ.	Max.	Unit
	Cin Cout			2.2uF 4.7uF		µF
	L	Rdcr,max<80mOhm		0.68		uH
	Vout			5.3		V
	Ripple	Vin=3.4V/3.8V/4.2V, Cin=2.2uF & Cout=4.7uF, L= 0.68uH (Rdcr,max<80mOhm) 650mA , switching Freq 2MHz			100	mV
	Switching frequency			2		MHz
	Quiescent current	Iout = 0		4	6	mA

2.6.3 ISINK and KPLED Switches

One built-in open-drain output switch drives the keypad LED (KPLED) in the handset. The switch is controlled by the baseband with enabling registers. The switch of keypad LED can sink as much as 60mA current, and the output is high impedance when disabled. The value of the sink current decides the brightness of the LED.

One current controlled open drain drivers are also implemented to drive the LCM backlight module, and provides 6-current-level steps of up to 48mA.

MEDIATEK CONFIDENTIAL FOR dengzhenli@far-sightedmobile.com USE ONLY

This document contains information that is proprietary to MediaTek Inc.
Unauthorized reproduction or disclosure of this information in whole or in part is strictly prohibited.

2.6.3.1 Block Description

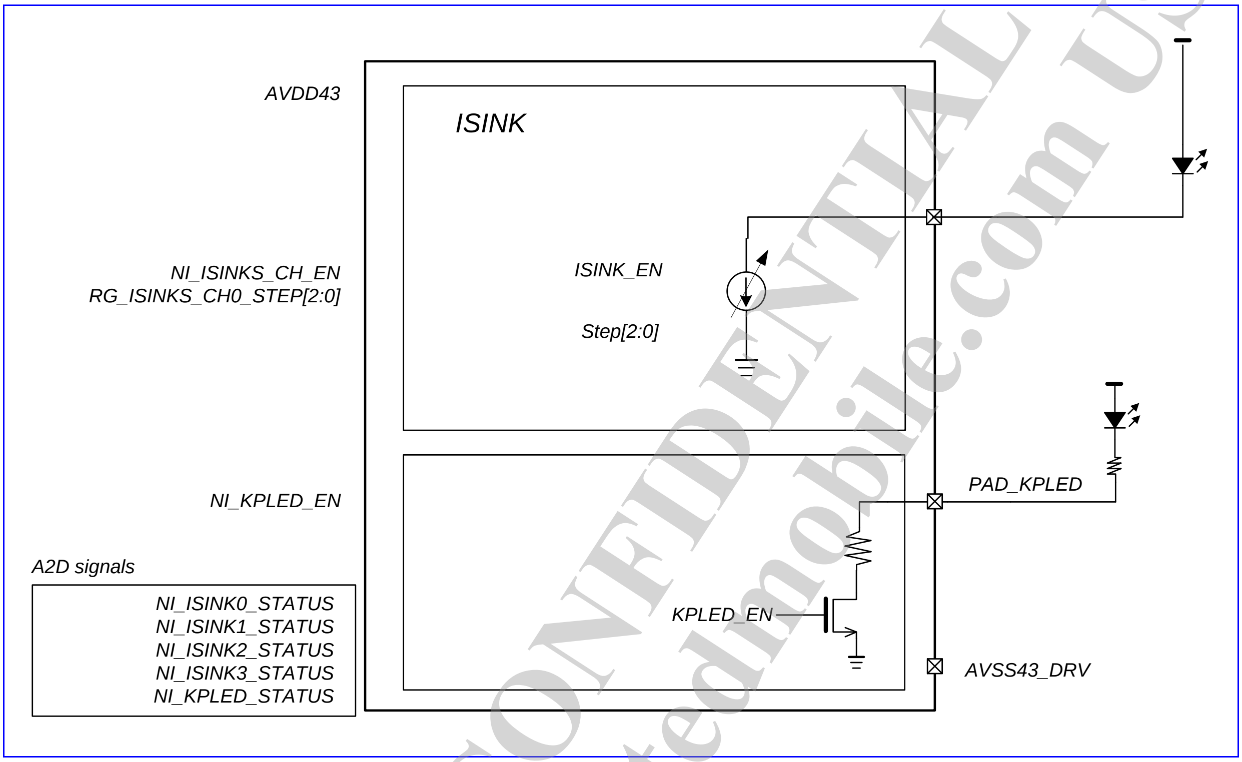

Figure 11. ISINKs and KPLED switches bock diagram

2.6.3.2 Functional Specifications

Table 26. ISINKs and KPLED switches specification

Symbol	Description	Condition	Min.	Typ.	Max.	Unit
	Sink current of keypad LED driver	Von > 0.5V, 100% dimming duty	60			mA
	Sink current of ISINK	Von > 0.15V, 100% dimming duty, ISINKS_CHx_STEP = 000		4		mA
	Sink current of ISINK	Von > 0.15V, 100% dimming duty, ISINKS_CHx_STEP = 001		8		mA
	Sink current of ISINK	Von > 0.15V, 100% dimming duty, ISINKS_CHx_STEP = 010		12		mA
	Sink current of ISINK	Von > 0.15V, 100% dimming duty, ISINKS_CHx_STEP = 011		16		mA
	Sink current of ISINK	Von > 0.15V, 100% dimming duty, ISINKS_CHx_STEP = 100		20		mA
	Sink current of ISINK	Von > 0.15V, 100% dimming		24		mA

This document contains information that is proprietary to MediaTek Inc.
Unauthorized reproduction or disclosure of this information in whole or in part is strictly prohibited.
MEDIATEK CONFIDENTIAL FOR dengzhenli@fat-lightedmobile.com USE ONLY

Symbol	Description	Condition	Min.	Typ.	Max.	Unit
		duty, ISINKS_CHx_STEP = 101				
	Current mismatch between the 4 channels	Von > 0.15V, 100% dimming duty	-5		5	%

2.6.4 STRUP

PMU handles the power-on and off of the handset. If the battery voltage is neither in the UVLO state (VBAT ≥ 3.4V) nor in the thermal condition, there are three methods to power on the handset system: pulling PWRKEY low (the user pushes PWRKEY), pulling PWRBB high (baseband BB_WakeUp) or valid charger plug-in.

According to different battery voltage (VBAT) and phone states, control signals and regulators will have different responses.

2.6.5 PCHR

The charger controller senses the charger input voltage from either a standard AC-DC adaptor or an USB charger. When the charger input voltage is within a pre-determined range, the charging process will be activated. This detector can resist higher input voltage than other parts of the PMU.

This document contains information that is proprietary to MediaTek Inc.
Unauthorized reproduction or disclosure of this information in whole or in part is strictly prohibited.
MEDIATEK CONFIDENTIAL FOR dengzhenli@ far-sightedmobile.com USE ONLY

2.6.5.1 Block Description

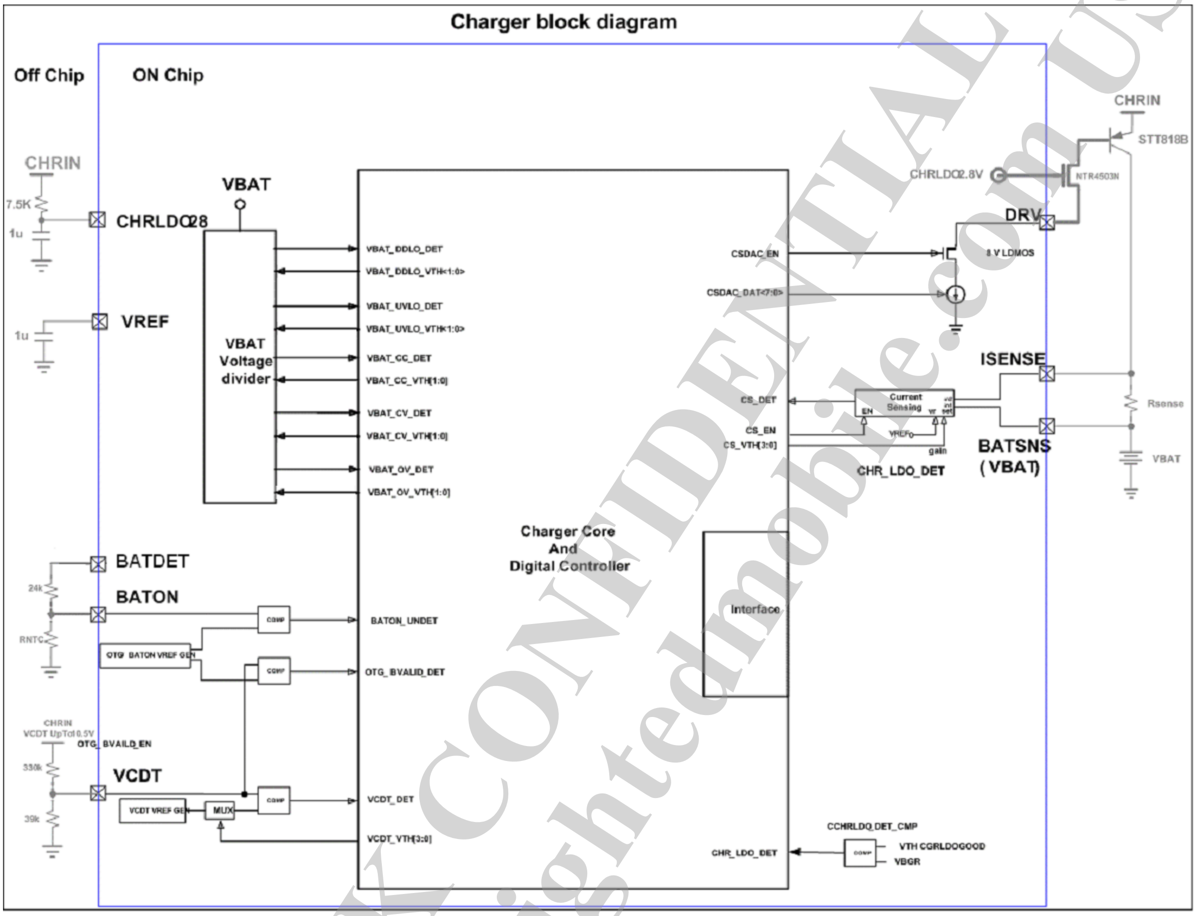

Figure 12. PCHR block diagram

2.6.5.1.1 Charger Detection

Whenever an invalid charging source is detected (> 7.0 V), the charger detector stops the charging process immediately to avoid burning out the chip or even the phone. In addition, if the charger-in level is not high enough (< 4.3V), the charger will also be disabled to avoid improper charging behavior.

2.6.5.1.2 Charging Control

When the charger is active, the charger controller manages the charging phase according to the battery status. During the charging period, the battery voltage is constantly monitored. The battery charger supports pre-charge mode (VBAT < 3.2V, PMU power-off state), CC mode (constant current mode or fast charging mode at the range 3.2V < VBAT < 4.2V) and CV mode (constant voltage mode) to optimize the charging procedure for Li-ion battery. The charging states diagram is shown in the figure below.

MEDIATEK CONFIDENTIAL FOR dengzhenli@far-sightedmobile.com USE ONLY

This document contains information that is proprietary to MediaTek Inc.
Unauthorized reproduction or disclosure of this information in whole or in part is strictly prohibited.

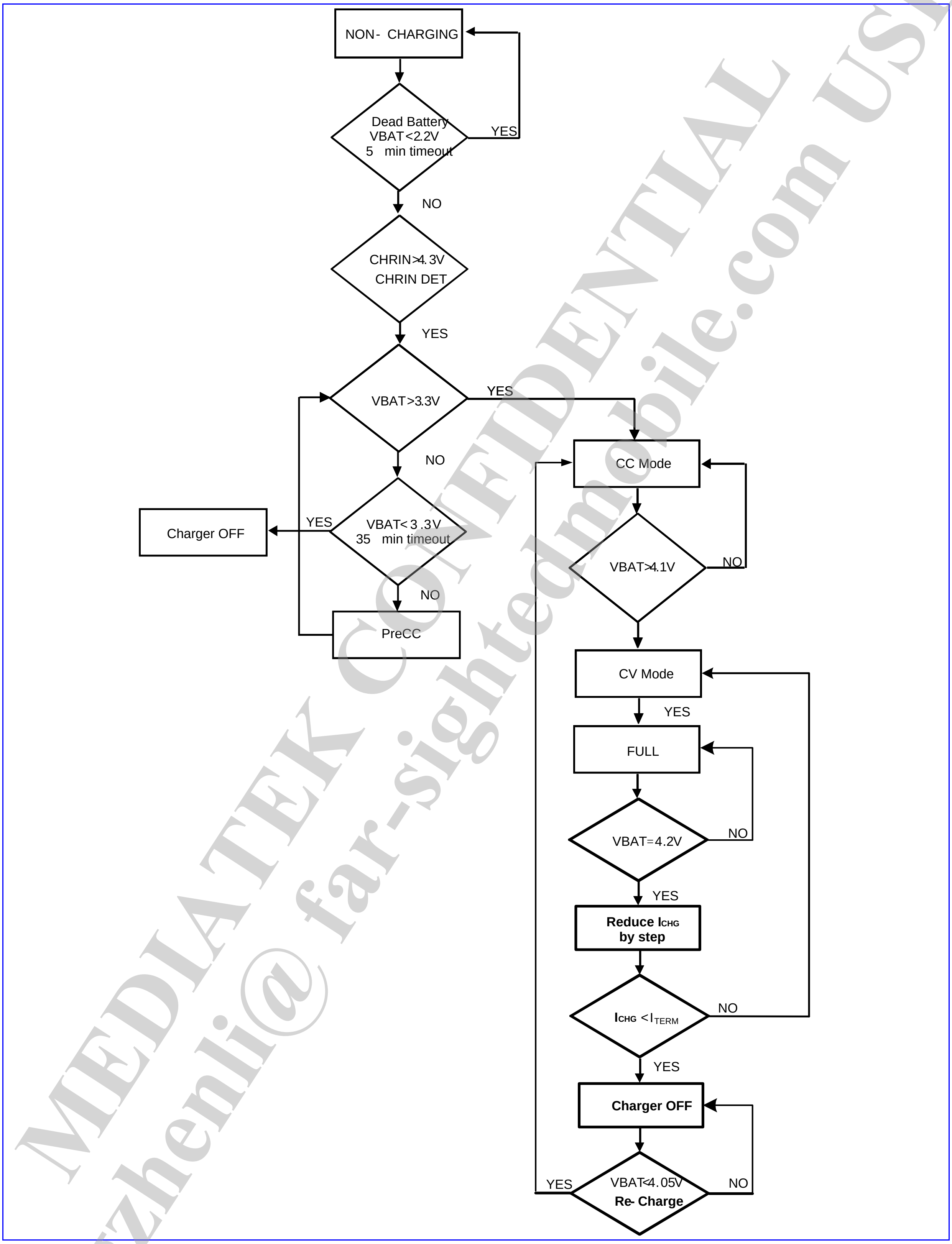

Figure 13. Charging states diagram

This document contains information that is proprietary to MediaTek Inc.
Unauthorized reproduction or disclosure of this information in whole or in part is strictly prohibited.

Pre-charge mode

When the battery voltage is in the UVLO state, the charger operates in the pre-charge mode. There are two steps in this mode. When the battery voltage is deeply discharged below 2.2V, PRECC0 trickle charging current will be applied to the battery.

The PRECC1 trickle charging current is about 550ms pulse 70mA current when VBAT is under 2.2V.

When the battery voltage exceeds 2.2V, called the PRECC2 stage, the closed-loop pre-charge is enabled. The voltage drop across the external RSENSE is kept around 40mV (AC charger) or 14mV (USB host). The closed-loop pre-charge current can be calculated:

$$I_{PRECC2,AC\,adapter} = \frac{V_{SENSE}}{Rsense} = \frac{40mV}{Rsense}$$

$$I_{PRECC2,USB\,HOST} = \frac{V_{SENSE}}{Rsense} = \frac{14mV}{Rsense}$$

Constant current mode

As the battery is charged up and over 3.4V, it can switch to the CC mode. (CHR_EN should be high) In the CC mode, several charging currents can be set by programming registers or the external RSENSE resistor. The charging current can be determined by CS_VTH/RSENSE, where CS_VTH is programmed by registers. For example, if RSENSE is selected as 0.2ohm, the CC mode charging current can be set from 70 to 800mA. It can accommodate the battery charger to various charger inputs with different current capabilities.

Constant voltage mode and over-voltage protection (OV)

While the battery voltage reaches about 4.2V, a constant voltage is used for charging. This is called the full-voltage charging mode or constant-voltage charging mode in correspondence to a linear charger. While the battery voltage actually reaches 4.2V, the charging current is gradually decreased step-by-step, the end-of-charging process starts. It may prolong the charging and detecting period for acquiring optimized full charging volume. The charging process is completed once the current reaches zero automatically and this mechanism is optimized for different battery

BC1.1 Dead-Battery Support of China Standard

MT6261A supports dead-battery condition from China standard (called BC1.1). The specification protects dead-battery charging by timer and trickle current. Once the battery voltage is below 2.2V, a period (TUNIT) of trickle current (IUNIT) will be applied to the battery.

If the battery voltage is still below 2.2V after applying trickle current, the charger will be disabled. On the other hand, if the battery voltage is raised to above 2.2V, the charger will enter the PRECC1 stage, and the charging current will be 70mA or 200mA depending on the type of charging port.

Under the condition of battery voltage from 2.2V to 3.3V, the charger will charge the battery with the PRECC1 current.

This document contains information that is proprietary to MediaTek Inc.
Unauthorized reproduction or disclosure of this information in whole or in part is strictly prohibited.
MEDIATEK CONFIDENTIAL FOR dengzhenli@far-sightedmobile.com USE ONLY

A dedicated 5mins (T1) timer will be timed out and disable the charger if the battery voltage is always below 2.7V under charging. Another 35mins (T2) timer will also be timed out and disable the charger if the battery voltage is always kept between 2.7V and 3.3V under charging.

The trickle current (IUNIT) and two dedicated timers protect the charging action if the battery is dead.

2.6.5.2 Functional Specifications

Table 27. Charger detection specifications

Symbol	Description	Condition	Min.	Typ.	Max.	Unit
	Charger detect-on range		4.3		7	V

Table 28. Pre-charge specifications

Symbol	Description	Condition	Min.	Typ.	Max.	Unit
	IUNIT with 500ms pulse	VBAT < 2.2V	20	48	100	mA
	Pre-charging current	VBAT < 2.2V (500ms pulse)	20	48	100	mA
		VBAT ≥ 2.2V (USB host)	$7/R_{sense}$	$14/R_{sense}$	$20/R_{sense}$	mA
		VBAT ≥ 2.2V (AC adapter < 7V)	$30/R_{sense}$	$40/R_{sense}$	$50/R_{sense}$	mA
		VBAT ≥ 2.2V (AC adapter > 7V)	$7/R_{sense}$	$14/R_{sense}$	$20/R_{sense}$	mA
	Pre-charging off threshold	CHR_EN = L		3.3		V
	Pre-charging off hysteresis			0.4		V

Table 29. Constant current specifications

Symbol	Description	Condition	Min.	Typ.	Max.	Unit
	CC mode charging current (CS_VTH)	CS_VTH [3:0] = 0000		$320/R_{sense}$		mA
		CS_VTH [3:0] = 0001		$300/R_{sense}$		mA
		CS_VTH [3:0] = 0010		$280/R_{sense}$		mA
		CS_VTH [3:0] = 0011		$260/R_{sense}$		mA
		CS_VTH [3:0] = 0100		$240/R_{sense}$		mA
		CS_VTH [3:0] = 0101		$220/R_{sense}$		mA
		CS_VTH [3:0] = 0110		$200/R_{sense}$		mA
		CS_VTH [3:0] = 0111		$180/R_{sense}$		mA
		CS_VTH [3:0] = 1000		$160/R_{sense}$		
		CS_VTH [3:0] = 1001		$140/R_{sense}$		

This document contains information that is proprietary to MediaTek Inc.
Unauthorized reproduction or disclosure of this information in whole or in part is strictly prohibited.
MEDIATEK CONFIDENTIAL FOR dengzhenli@far-sightedmobile.com USE ONLY

Symbol	Description	Condition	Min.	Typ.	Max.	Unit
		CS_VTH [3:0] = 1010		$130/R_{sense}$		
		CS_VTH [3:0] = 1011		$110/R_{sense}$		
		CS_VTH [3:0] = 1100		$90/R_{sense}$		
		CS_VTH [3:0] = 1101		$60/R_{sense}$		
		CS_VTH [3:0] = 1110		$40/R_{sense}$		
		CS_VTH [3:0] = 1111		$14/R_{sense}$		
	Current sensing resistor	RSENSE		0.2		ohm

Table 30. Constant voltage and over-voltage protection specifications

Symbol	Description	Condition	Min.	Typ.	Max.	Unit
	Charging complete threshold		4.15	4.2	4.25	V
	Battery over-voltage protection threshold (OV)			4.3		V

Table 31. BC1.1 specifications

Symbol	Description	Condition	Min.	Typ.	Max.	Unit
IUNIT	BC1.1 trickle current	VBAT < 2.2V		50	100	mA
IPRECC1 (USB host)	PRECC1 current	2.2 < VBAT < 3.3V		70	100	mA
IPRECC1 (AC adapter)	PRECC1 current	2.2 < VBAT < 3.3V		200	250	mA
T1	5 minute dedicated timer	2.2 < VBAT < 2.7V		5	6.5	min.
T2	35 minute dedicated timer	2.7 < VBAT < 3.3V		35	38.5	min.
TUNIT	BC1.1 trickle current period			550	770	ms.

2.7 GSM/GPRS RF

2.7.1 General Description

2G RFSYS which is built in MT6261A SOC is a highly integrated RF transceiver for multi-band GSM and GPRS cellular systems.

The features include:

This document contains information that is proprietary to MediaTek Inc.
Unauthorized reproduction or disclosure of this information in whole or in part is strictly prohibited.
MEDIATEK CONFIDENTIAL FOR dengzhenli@far-sightedmobile.com USE ONLY

Receiver

– Single-end saw-less Rx

– Quadrature RF mixer

– Fully integrated channel filter

– High dynamic range ADC

– 12dB PGA gain with 6dB gain step

Transmitter

– High accurate transmitter modulator for GSM/GPRS application

– Built-in calibration of SX loop filter and loop gain

Frequency synthesizer

– Programmable fractional-N synthesizer

– Integrated wide range RFVCO

– Integrated loop filter

– Fast settling time suitable for multi-slot GSM/GPRS applications

Digitally-Controlled Crystal Oscillator (DCXO)

– Two-pin 26 MHz crystal oscillator

– On-chip programmable capacitor array for coarse-tuning

– On-chip programmable capacitor array for fine-tuning

– Supports 32K XTAL-less operation

MEDIATEK CONFIDENTIAL FOR dengzhenli@far-sightedmobile.com USE ONLY

This document contains information that is proprietary to MediaTek Inc.
Unauthorized reproduction or disclosure of this information in whole or in part is strictly prohibited.

2.7.2 Functional Block Diagram

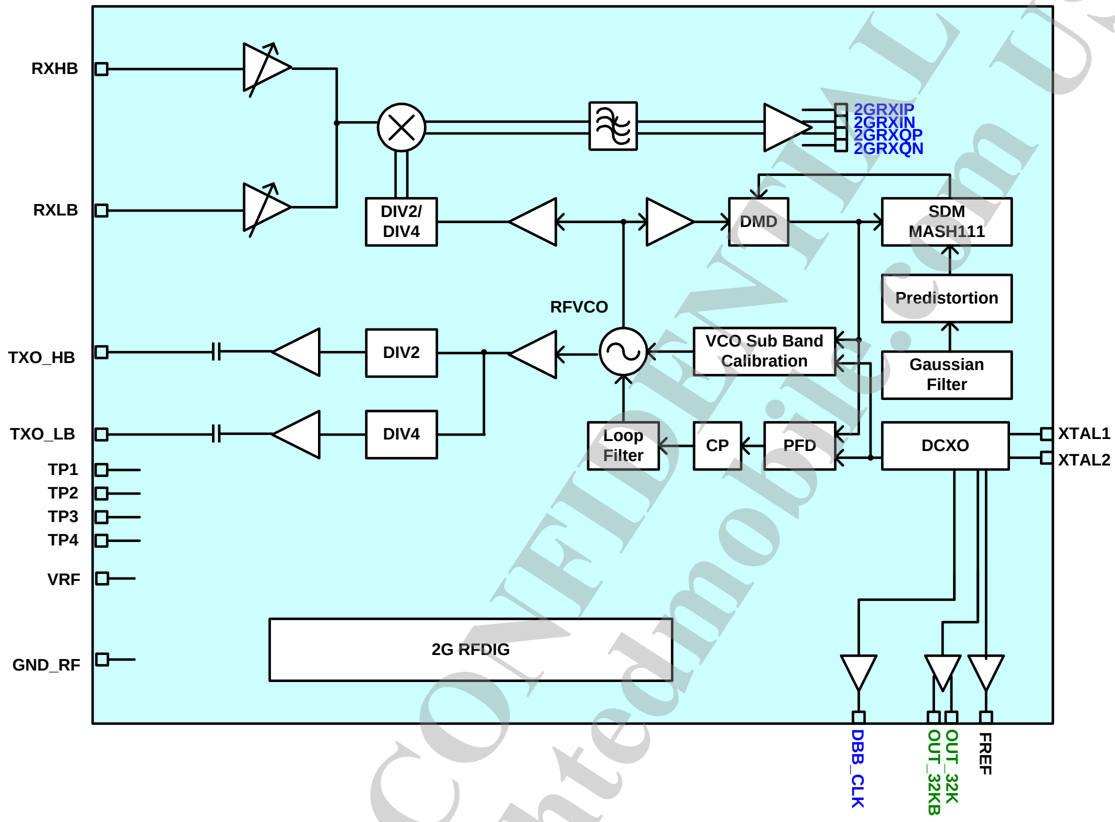

Figure 14. Diagram of MT6261A 2G RFSYS

2.7.3 Electrical Characteristics

Table 32. DC characteristics (TA = 25oC, VDD = 2.8V unless otherwise stated)

RFSYS mode	VRF	AVDD28_2GAFE	RFSYS total	Unit
BCM_Deep sleep (DCXO is off)	17	1	18	uA
BCM_Sleep (DCXO is on)	1.2	0.26	1.5	mA
Low power mode	60	1	61	uA
Full power mode	1.2	0.26	1.5	mA
RX (GSM850/EGSM)	62	5	67	mA
RX (DCS/PCS)	66	5	71	mA
TX (GSM850/EGSM)	41	2	43	mA
TX (DCS/PCS)	36	2	38	mA

Table 33. Rx AC characteristics (TA = 25oC, VDD = 2.8V unless otherwise stated)

Item	Symbol	Band	Test condition	Min.	Typ.	Max.	Unit
Input frequency	F_{RX}	GSM850		869		894	MHz
		GSM900		925		960	MHz

This document contains information that is proprietary to MediaTek Inc.
Unauthorized reproduction or disclosure of this information in whole or in part is strictly prohibited.
MEDIATEK CONFIDENTIAL FOR dengzhenli@far-sightedmobile.com USE ONLY

Item	Symbol	Band	Test condition	Min.	Typ.	Max.	Unit
		DCS1800		1,805		1,880	MHz
		PCS1900		1,930		1,990	MHz
Voltage gain 1	G_1	GSM850	LNA = High gain PGA = High gain	52[1]	55		dB
		GSM900		52[2]	55		dB
		DCS1800	LNA = High gain PGA = High gain	52[3]	55		dB
		PCS1900		52[4]	55		dB
Voltage gain 2	G_2	GSM850	LNA = Middle gain PGA = High gain		46		dB
		GSM900			46		dB
		DCS1800	LNA = Middle gain PGA = High gain		45		dB
		PCS1900			45		dB
Voltage gain 3	G_3	GSM850	LNA = Low gain PGA = High gain		26		dB
		GSM900			26		dB
		DCS1800	LNA = Low gain PGA = High gain		26		dB
		PCS1900			26		dB
Noise figure at 25°C	NF_{25}	GSM850	G_1		3	5[1]	dB
		GSM900			3	5[2]	dB
		DCS1800			3	5[3]	dB
		PCS1900			3	5[4]	dB
Noise figure at 85°C	NF_{85}	GSM850	G_1		4.5		dB
		GSM900			4.5		dB
		DCS1800			4.5		dB
		PCS1900			4.5		dB
2nd-order input intercept point	IIP2	GSM850	G2	31[1]	43		dBm
		GSM900		31[2]	43		dBm
		DCS1800		31[3]	43		dBm
		PCS1900		31[4]	43		dBm
3rd-order input intercept point	IIP3	GSM850	G2	-14[1]	-3		dBm
		GSM900		-14[2]	-3		dBm
		DCS1800		-14[3]	-3		dBm
		PCS1900		-14[4]	-3		dBm
3rd-order input intercept point @ -20°C	$IIP3_{-20}$	GSM850	G2		-5		dBm
		GSM900			-5		dBm
		DCS1800			-5		dBm
		PCS1900			-5		dBm
Receiver S/N with 3MHz blocker	SN_{3M}	GSM850	G2 Blocker = -23dBm	8[1]	12		dB
		GSM900		8[2]	12		dB
		DCS1800	G2 Blocker = -26dBm	8[3]	12		dB
		PCS1900		8[4]	12		dB
Receiver S/N with	SN_{OOB}	GSM850	G2	6[5]	8		dB

This document contains information that is proprietary to MediaTek Inc.
Unauthorized reproduction or disclosure of this information in whole or in part is strictly prohibited.

Item	Symbol	Band	Test condition	Min.	Typ.	Max.	Unit
OBB		GSM900	Blocker = 2dBm, offset +/-20MHz	6[5]	8		dB
		DCS1800	G2 Blocker = -10/2dBm, offset +/-80/-100MHz	6[5]	8		dB
		PCS1900		6[5]	8		dB
Image rejection ratio	IRR	ALL	G2	32[1,2,3,4]	40		dB
Receiver channel response attenuation		ALL	@3MHz offset		20		dB
			@6MHz offset		35		dB
Receiver filtering 3-dB bandwidth		ALL	For all gain settings		900		kHz
PGA gain linearity		ALL	INL		0.2	1[5]	dBΩ
			DNL		0.1	0.5[5]	dBΩ
PGA gain step		ALL			6		dBΩ
PGA dynamic range		ALL			12		dBΩ
I/Q common-mode output voltage		ALL	G1	1.1[5]	1.2	1.3[5]	V
Output static dc offset		ALL	G1		100	200	mV

Table 34. Tx GMSK AC characteristics (TA = 25oC, VDD = 2.8V unless otherwise stated)

Item	Symbol	Band	Test condition	Min.	Typ.	Max.	Unit
Frequency	F_{TX}	GSM850		824		849	MHz
		GSM900		880		915	MHz
		DCS1800		1,710		1,785	MHz
		PCS1900		1,850		1,910	MHz
RMS phase error	PE_{rms}	GSM850 GSM900			1.5	2.5[1,2]	degree
		DCS1800 PCS1900			1.5	2.5[3,4]	degree
Output modulation spectrum	ORFS	GSM850 GSM900	400kHz offset (RBW = 30kHz bandwidth)		-66	-64[1,2]	dBc
		DCS1800 PCS1900			-66	-64[3,4]	dBc
		GSM850 GSM900	1.8MHz offset (RBW = 30kHz bandwidth)			-75[5]	dBc
		DCS1800 PCS1900				-75[5]	dBc
Tx noise in Rx band		GSM850	20MHz offset		-165	-163[5]	dBc/Hz
			35MHz offset		-166	-164[5]	dBc/Hz
		GSM900	20MHz offset		-165	-163[5]	dBc/Hz

This document contains information that is proprietary to MediaTek Inc.
Unauthorized reproduction or disclosure of this information in whole or in part is strictly prohibited.
MEDIATEK CONFIDENTIAL FOR dengzhenli@far-sightedmobile.com USE ONLY

Item	Symbol	Band	Test condition	Min.	Typ.	Max.	Unit
			35MHz offset		-166	-164[5]	dBc/Hz
		DCS1800	20MHz offset		-160	-156[5]	dBc/Hz
		PCS1900	20MHz offset		-160	-156[5]	dBc/Hz
Output power level	P_{out}	GSM850 GSM900	PA driver amplifier R_{load} = 50Ω	1[1,2]	3	6[1,2]	dBm
		DCS1800 PCS1900		1[3,4]	3	6[3,4]	dBm
Output 3rd harmonics		ALL	PA driver amplifier		-10		dBc

Table 35. SX AC characteristics (TA = 25oC, VDD = 2.8V unless otherwise stated)

Item	Symbol	Test condition	Min.	Typ.	Max.	Unit
Frequency range	F_{range}		3,296		3,980	MHz
Reference frequency	F_{ref}			26		MHz
Frequency step resolution	F_{res}			3		Hz
Phase noise	PN_{10k}	@ 10kHz offset		-83		dBc/Hz
	PN_{400k}	@ 400kHz offset		-114		dBc/Hz
	PN_{3M}	@ 3MHz offset		-136		dBc/Hz
Lock time of Rx burst	T_{lock_rx}	Frequency error < ± 0.1ppm		150	200[5]	us
Lock time of Tx burst	T_{lock_tx}	Frequency error < ± 0.1ppm		200	300[5]	us
Pushing figure		With internal RFVCO LDO		400		kHz/V

Table 36. DCXO AC characteristics (TA = 25oC, VDD = 2.8V unless otherwise stated)

Item	Symbol	Test condition	Min.	Typ.	Max.	Unit
Operating frequency	F_{ref}			26		MHz
Crystal C load	C_L			7.5		pF
Crystal tuning sensitivity	T_S		27.5	32.3		ppm/pF
Static range	SR	CDAC from 0 to 255	± 22	± 50		ppm
Dynamic range	DR	CAFC from 0 to 8191	36	50		ppm
AFC tuning step	$F_{res\text{-}AFC}$			0.008		ppm/DAC
AFC settling time	T_{AFC}	CAFC from 0 to 8191 CAFC from 8191 to 0 Frequency error < 0.1ppm		100	200[5]	us
Start-up time	T_{DCXO}	Frequency error < 1ppm Amplitude > 90 %			4[5]	ms
Pushing figure				0.2		ppm/V
Fref buffer output level	V_{Fref}	Max. loading = 19pF	0.8[5]			$V_{p\text{-}p}$

This document contains information that is proprietary to MediaTek Inc.
Unauthorized reproduction or disclosure of this information in whole or in part is strictly prohibited.
MEDIATEK CONFIDENTIAL FOR dengzhenli@far-sightedmobile.com USE ONLY

Item	Symbol	Test condition	Min.	Typ.	Max.	Unit
Fref buffer output phase noise		10kHz offset Jitter noise		-135		dBc/Hz

[1, 2]: Tested at E-GSM Tx channel 0 and GSM850 Rx channel 190.
[3, 4]: Tested at PCS Tx channel 601 and DCS Rx channel 636.
[5]: Not subject to production test – verified by characterization and design.

2.8 Bluetooth

2.8.1 Block Description

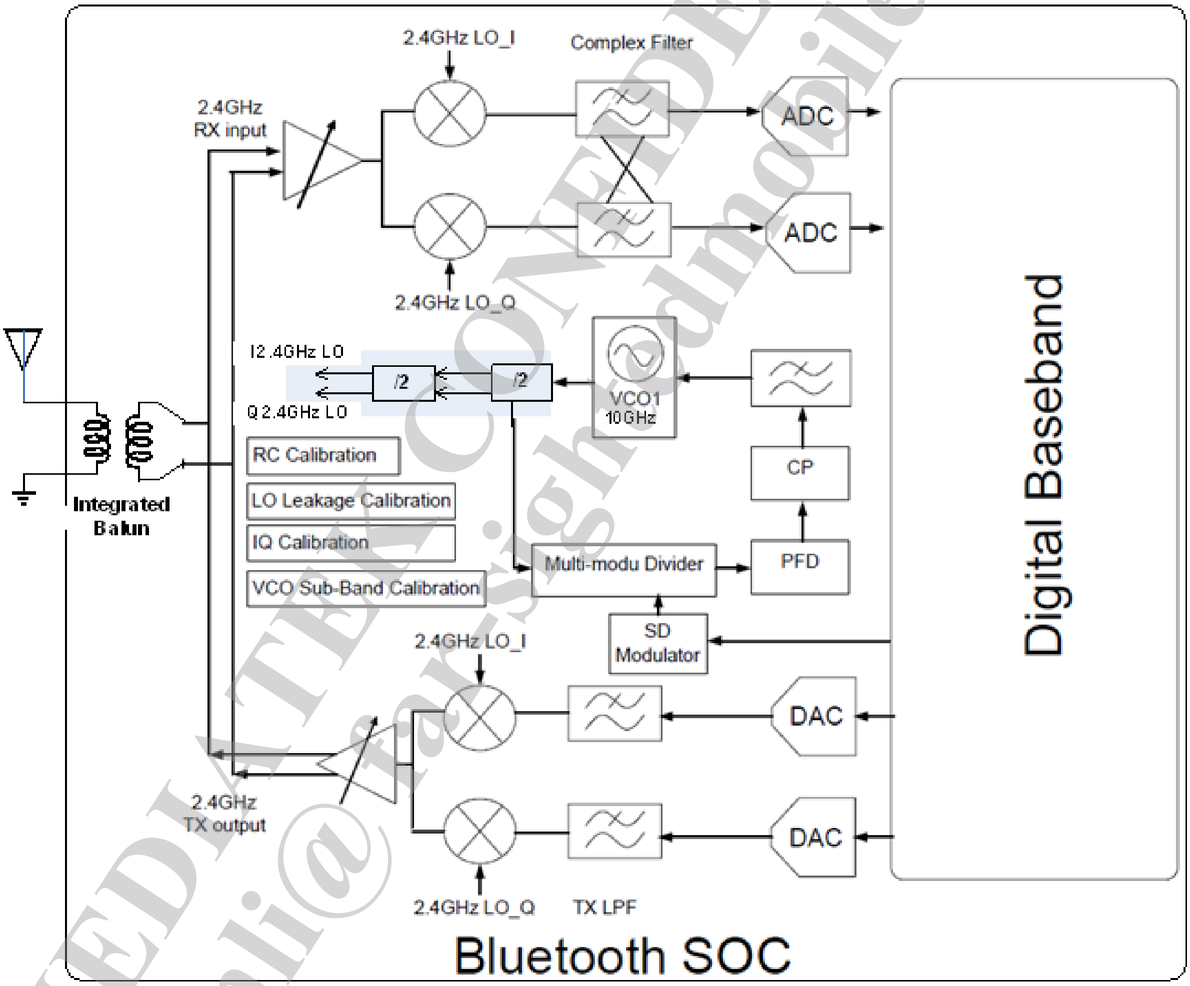

Figure 15. System diagram of Bluetooth RF transceiver

The Bluetooth RF subsystem contains a fully integrated transceiver.

For TX path, the baseband transmit data are digitally modulated in the baseband processor then up-converted to 2.4GHz RF channels through DA converter, filter, IQ up-converter and power amplifier. The power amplifier is capable of transmitting 7.5dBm power for class-1.5 operation.

This document contains information that is proprietary to MediaTek Inc.
Unauthorized reproduction or disclosure of this information in whole or in part is strictly prohibited.
MEDIATEK CONFIDENTIAL FOR denzhenli@fariglobalmobile.com USE ONLY

For RX path, MT6261A is a low IF receiver architecture. An image-reject mixer down-converts the RF signal to the IF with LO from the synthesizer, which supports different clock frequencies as the reference clock. The mixer output is then converted to digital signal and down-converted to baseband for demodulation. A fast AGC enables effective discovery of device within dynamic range of the receiver.

MT6261A features self calibration schemes to compensate the process and temperature variation to maintain high performance. Those calibrations are performed automatically right after system boot-up.

2.8.2 Functional Specifications

2.8.2.1 Basic Data Rate – Receiver Specifications

Table 37. Basic data rate – receiver specifications

Symbol	Description	Condition	Min.	Typ.	Max.	Unit
	Frequency range		2,402	-	2,480	MHz
	Receiver sensitivity	BER < 0.1%	-	-95	-	dBm
	Max. detectable input power	BER < 0.1%	-	0	-	dBm
	C/I co-channel selectivity	BER < 0.1%	-	4	-	dB
	C/I 1 MHz adj. channel selectivity	BER < 0.1%	-	-12	-	dB
	C/I 2 MHz adj. channel selectivity	BER < 0.1%	-	-42.5	-	dB
	C/I ≥ 3 MHz adj. channel selectivity	BER < 0.1%	-	-46	-	dB
	C/I image channel selectivity	BER < 0.1%	-	-24	-	dB
	C/I image 1 MHz adj. channel selectivity	BER < 0.1%	-	-45	-	dB
	Out-of-band blocking	30 to 2,000 MHz	-	-4	-	dBm
		2,000 to 2,399 MHz	-	-18	-	dBm
		2,498 to 3,000 MHz	-	-18	-	dBm
		3,000 MHz to 12.75 GHz	-	1	-	dBm
	Intermodulation		-	-22	-	dBm

2.8.2.2 Basic Data Rate – Transmitter Specification

Table 38. Basic data rate – transmitter specification

Symbol	Description	Condition	Min.	Typ.	Max.	Unit
	Frequency range		2,402	-	2,480	MHz
	Maximum transmit power		-	7.5	-	dBm
	Gain step		-	4	-	dB

This document contains information that is proprietary to MediaTek Inc.
Unauthorized reproduction or disclosure of this information in whole or in part is strictly prohibited.

MEDIATEK CONFIDENTIAL FOR dengzhenli@ farsightedmobile.com USE ONLY

Symbol	Description	Condition	Min.	Typ.	Max.	Unit
	Δf1avg (00001111)		140	158	175	kHz
	Δf2max (10101010)		115	130	-	kHz
	Δf1avg/Δf2avg		0.8	0.9	-	kHz
	Initial carrier frequency drift		-75	5	75	kHz
	Frequency drift	DH1	-25	9	25	kHz
		DH3	-40	10	40	kHz
		DH5	-40	10	40	kHz
	Max. drift rate		-	100	400	Hz/µs
	BW_{20dB} of Tx output spectrum		-	920	1,000	kHz
	In-band spurious emission	±2 MHz offset	-	-38	-	dBm
		±3 MHz offset	-	-43	-	dBm
		> ±3 MHz offset	-	-43	-	dBm
	Out-of-band spurious emission	30 MHz to 1 GHz	-	-36	-	dBm
		1 to 12.75 GHz	-	-30	-	dBm
		1.8 to 1.9 GHz	-	-47	-	dBm
		5.15 to 5.3 GHz	-	-47	-	dBm

2.8.2.3 Enhanced Data Rate – Receiver Specifications

Table 39. Enhanced data rate – receiver specifications

Symbol	Description	Condition	Min.	Typ.	Max.	Unit
	Frequency range		2,402	-	2,480	MHz
	Receiver sensitivity	π/4 DQPSK, BER < 0.01%	-	-95	-	dBm
		8PSK, BER < 0.01%	-	-88	-	dBm
	Max. detectable input power	π/4 DQPSK, BER < 0.01%	-	-4.5	-	dBm
		8PSK, BER < 0.01%	-	-4.5	-	dBm
	C/I co-channel selectivity	π/4 DQPSK, BER < 0.01%	-	8	-	dB
		8PSK, BER < 0.01%	-	14.5	-	dB
	C/I 1MHz adj. channel selectivity	π/4 DQPSK, BER < 0.01%	-	-13	-	dB
		8PSK, BER < 0.01%	-	-7	-	dB
	C/I 2MHz adj. channel selectivity	π/4 DQPSK, BER < 0.01%	-	-42	-	dB
		8PSK, BER < 0.01%	-	--41.5	-	dB
	C/I ≥ 3MHz adj. channel selectivity	π/4 DQPSK, BER < 0.01%	-	-48	-	dB
		8PSK, BER < 0.01%	-	-44.5	-	dB
	C/I image channel selectivity	π/4 DQPSK, BER < 0.01%	-	-30	-	dB
		8PSK, BER < 0.01%	-	-23	-	dB
	C/I image 1 MHz adj. channel selectivity	π/4 DQPSK, BER < 0.01%	-	-47.5	-	dB
		8PSK, BER < 0.01%	-	-44.5	-	dB

This document contains information that is proprietary to MediaTek Inc.
Unauthorized reproduction or disclosure of this information in whole or in part is strictly prohibited.
MEDIATEK CONFIDENTIAL FOR denghenli@ far-sightedmobile.com USE ONLY

2.8.2.4 Enhanced Data Rate – Transmitter Specifications

Table 40. Enhanced data rate – transmitter specifications

Symbol	Description	Condition	Min.	Typ.	Max.	Unit
	Frequency range		2,402	-	2,480	MHz
	Max. transmit power	π/4 DQPSK	-	4.5	-	dBm
		8PSK	-	4.5	-	dBm
	Relative transmit power	π/4 DQPSK	-	-1.7	-	dB
		8PSK	-	-1.7	-	dB
	Freq. stability ω_0	π/4 DQPSK	-	1.5	-	kHz
		8PSK	-	1.5	-	kHz
	Freq. stability ω_1	π/4 DQPSK	-	3	-	kHz
		8PSK	-	3	-	kHz
	$\| \omega_0+\omega_1 \|$	π/4 DQPSK	-	2.8	-	kHz
		8PSK	-	2.8	-	kHz
	RMS DEVM	π/4 DQPSK	-	7	-	%
		8PSK	-	6	-	%
	99% DEVM	π/4 DQPSK	-	11	-	%
		8PSK	-	11	-	%
	Peak DEVM	π/4 DQPSK	-	18	-	%
		8PSK	-	18	-	%
	In-band spurious emission	π/4 DQPSK, ±1 MHz offset	-	-28	-	dBm
		8PSK, ±1 MHz offset	-	-28	-	dBm
		π/4 DQPSK, ±2 MHz offset	-	-25	-	dBm
		8PSK, ±2 MHz offset	-	-25	-	dBm
		π/4 DQPSK, ±3 MHz offset	-	-40.5	-	dBm
		8PSK, ±3 MHz offset	-	-40.5	-	dBm

Note: To meet the specifications, use a front-end band-pass filter.

2.9 FM RF

2.9.1 Block Description

The connection between internal modules, as well as external interfaces, are as shown in Figure 16. The FM receiver section incorporates the complete receiving path with wide tuning range. The FM baseband signal processor incorporates the digital demodulator and audio processing function which provides superior audio quality.

FM contains completely integrated FM audio receiver functions (RDS/RBDS may also be supported depending on the model number). The integrated receiver enables superior sensitivity, ACI performance and FM audio performances with minimum external BOM.

This document contains information that is proprietary to MediaTek Inc.
Unauthorized reproduction or disclosure of this information in whole or in part is strictly prohibited.
MEDIATEK CONFIDENTIAL FOR denzheni@ far-signtedmobile.com USE ONLY

The FM subsystem supports either high performance stereo analog line out or digital audio output (I2S).

For models supporting RDS/RBDS, large dedicated internal data buffers are allocated to reduce the frequency of the interrupt to the host, so that the receiving host can enter low power states efficiently.

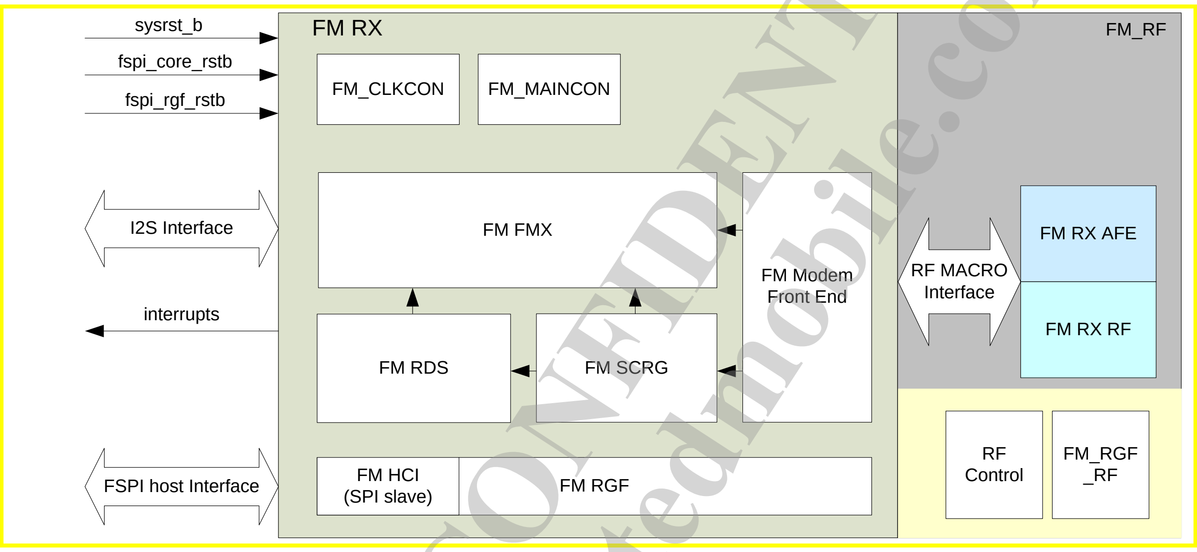

Figure 16. Block diagram of hardware top-level architecture

2.9.2 Functional Specifications

Table 41 . FM receiver DC characteristics (TA=25°C, VDD=2.8V unless otherwise stated)

Operating mode	Current consumption	Unit
Idle	5	µA
FM receiver	12	mA

Unless otherwise stated, all receiver characteristics are applicable to both long and short antenna ports when operated under the recommended operating conditions. Typical specifications are for channel 98.7MHz, default register settings and under recommended operating conditions. The minimum and maximum specifications are for extreme operating voltage and temperature conditions, unless otherwise stated.

Table 42. FM receiver AC characteristics

Symbol	Description	Condition	Min.	Typ.	Max.	Unit
	Input frequency range		65		108	MHz
	Sensitivity (long antenna)[1,3]	SINAD = 26dB, unmatched		3		dBµVemf
		SINAD = 26dB, matched		2		dBµVemf

This document contains information that is proprietary to MediaTek Inc.
Unauthorized reproduction or disclosure of this information in whole or in part is strictly prohibited.

Symbol	Description	Condition	Min.	Typ.	Max.	Unit
	RDS sensitivity (long antenna)	Δf=2kHz, BLER < 5%, unmatched		18		dBμVemf
	Sensitivity (short antenna)[1,3]	SINAD = 26dB, unmatched		3		dBμVemf
	RDS sensitivity (short antenna)	Δf = 2kHz, BLER < 5%, unmatched		18		dBμVemf
	LNA input resistance[4]	Antenna port		2.4k		Ohm
	LNA input capacitance[4]	Antenna port		8		pF
	AM suppression[1,4]	M = 0.3		58		dB
	Adjacent channel selectivity[1,4]	±200kHz		53		dB
	Alternate channel selectivity[1,4]	±400kHz		65		dB
	Spurious response rejection[4]	In-band		55		dB
	Maximum input level			117		dBμVemf
	Audio mono (S+N+D)/(N+D)[1,3,4]			60		dB
	Audio stereo (S+N+D)/(N+D)[2,3,4]			52		dB
	Audio stereo separation[4]	Δf = 75kHz		45		dB
	Audio output load resistance	Single-ended at AFR/AFL outputs		10k		Ohm
	Audio output load capacitance	Single-ended at AFR/AFL outputs		12.5		pF
	Audio output voltage[1,4]	At AFR/AFL outputs		80		mVrms
	Audio output THD[1,4]			0.05	0.1	%
	Audio output frequency range	3dB corner frequency	30		15k	Hz

[1] Δf = 22.5kHz, fm = 1kHz, 50μs de-emphasis, mono, L = R
[2] Δf = 22.5kHz, fm = 1kHz, 50us de-emphasis, stereo
[3] A-weighting, BW = 300 Hz to 15 kHz
[4] Vin = 60dBμVemf
[5] Reference clock accuracy assumes ideal FM source. If the input FM source has less frequency error, it is recommended to use a reference clock of accuracy within ±100ppm so as not to affect the channel scan quality.

MEDIATEK CONFIDENTIAL FOR dengzhenli@far-sightedmobile.com USE ONLY

This document contains information that is proprietary to MediaTek Inc.
Unauthorized reproduction or disclosure of this information in whole or in part is strictly prohibited.

2.10 Package Information

2.10.1 Package Outlines

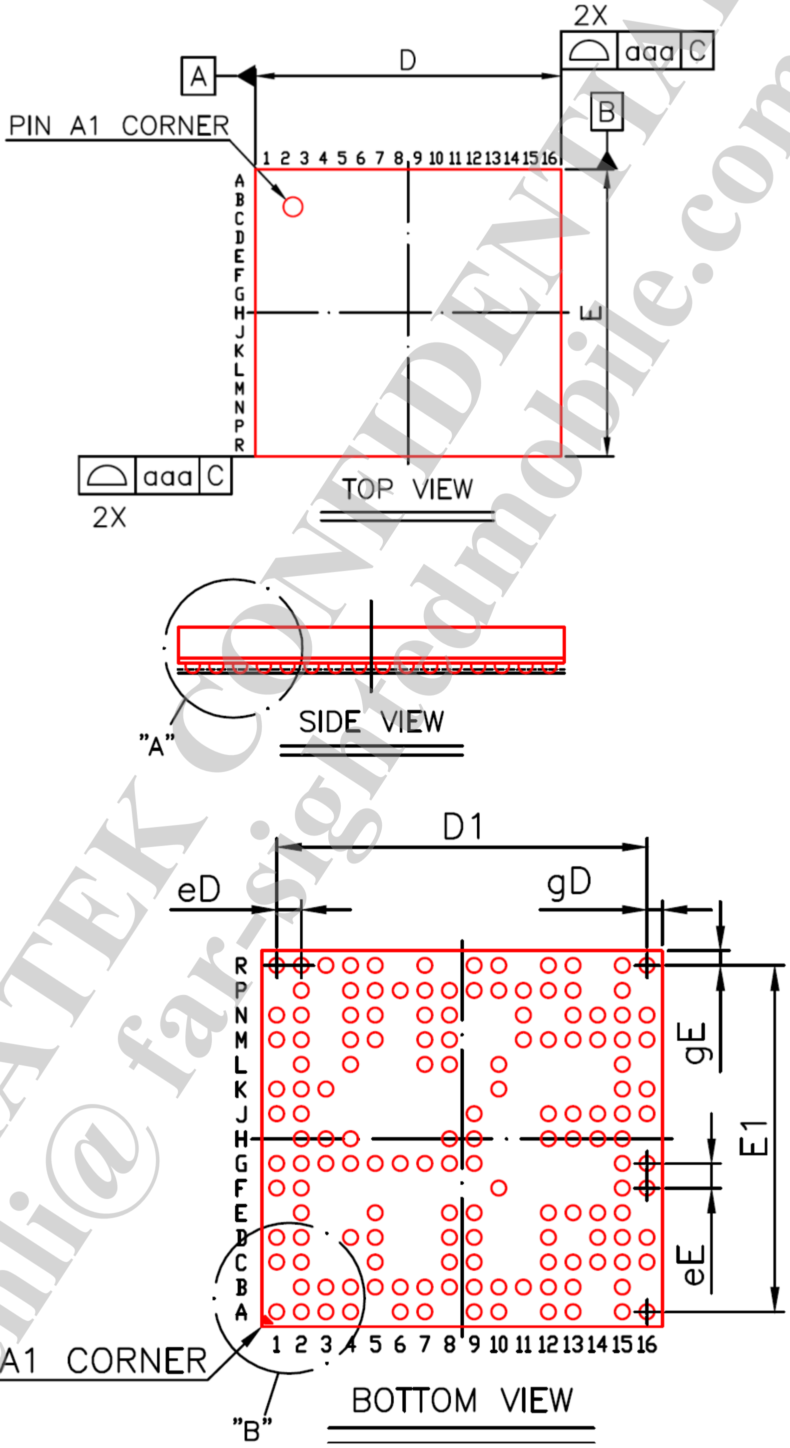

This document contains information that is proprietary to MediaTek Inc.
Unauthorized reproduction or disclosure of this information in whole or in part is strictly prohibited.

MEDIATEK CONFIDENTIAL FOR dengzhenli@ far-sightedmobile.com USE ONLY

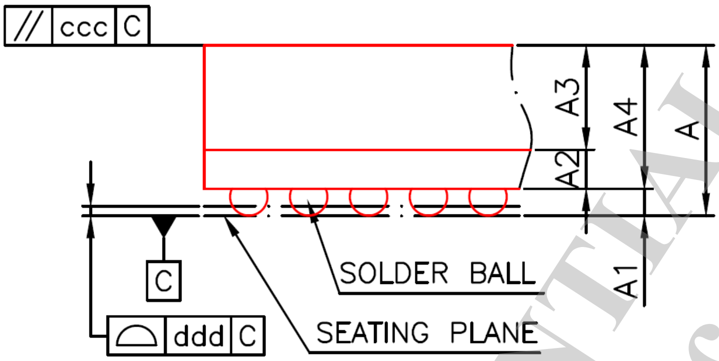

DETAIL : "A"

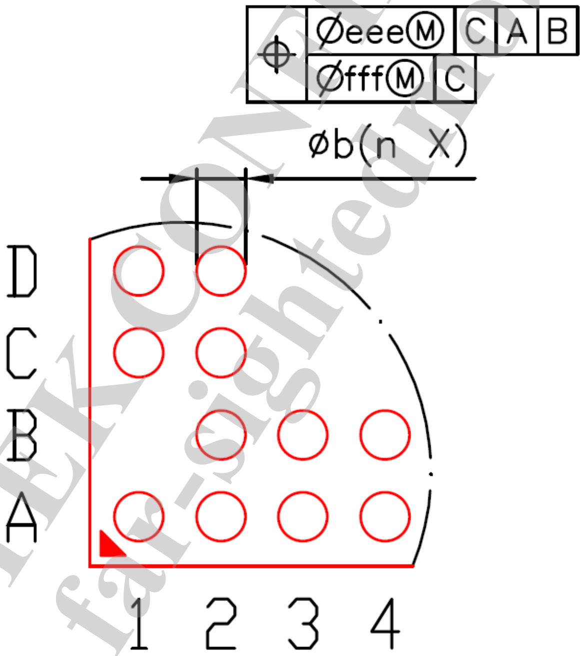

DETAIL : "B"

This document contains information that is proprietary to MediaTek Inc.
Unauthorized reproduction or disclosure of this information in whole or in part is strictly prohibited.

Item		Symbol	Common Dimensions MIN.	Common Dimensions NOM.	Common Dimensions MAX.
Package Type			TFBGA		
Body Size	X	D	8.00	8.10	8.20
Body Size	Y	E	7.50	7.60	7.70
Ball Pitch	X	eD	0.50		
Ball Pitch	Y	eE	0.50		
Mold Thickness		A3	0.65 Ref.		
Substrate Thickness		A2	0.11 Ref.		
Substrate+Mold Thickness		A4	0.71	0.76	0.81
Total Thickness		A	–	–	1.05
Ball Diameter			0.30		
Ball Stand Off		A1	0.16	0.21	0.26
Ball Width		b	0.25	0.30	0.35
Package Edge Tolerance		aaa	0.10		
Mold Flatness		ccc	0.10		
Coplanarity		ddd	0.08		
Ball Offset (Package)		eee	0.15		
Ball Offset (Ball)		fff	0.05		
Ball Count		n	145		
Edge Ball Center to Center	X	D1	7.50		
Edge Ball Center to Center	Y	E1	7.00		
Edge Ball Center to Package Edge	X	gD	0.30		
Edge Ball Center to Package Edge	Y	gE	0.30		

Figure 17. Outlines and dimension of TFBGA 8.1mm*7.6mm, 145-ball, 0.5 mm pitch package

MEDIATEK CONFIDENTIAL FOR dengzhenli@ far-sightedmobile.com USE ONLY

This document contains information that is proprietary to MediaTek Inc.
Unauthorized reproduction or disclosure of this information in whole or in part is strictly prohibited.

2.10.2 Thermal Operating Specifications

Symbol	Description	Value	Unit	Notes
	Thermal resistance from device junction to package case	48	C/W	
	Maximum package temperature	65	Deg C	
	Maximum power dissipation	1.28	W	

2.10.3 Lead-free Packaging

MT6261A is provided in a lead-free package and meets RoHS requirements

2.11 Ordering Information

2.11.1 Top Marking Definition

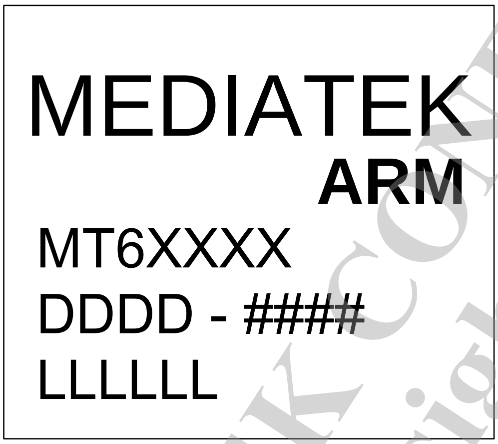

MTXXXXXX	Product No.
DDDD:	Date Code
####:	Subcontractor Code
LLLLLL:	Die Lot No.

Figure 18. Mass production top marking of MT6261A

Part number	Package	Description
MT6261A/A	TFBGA	8.1mm*7.6mm, 145-ball, 0.5 mm pitch package, non-security version

MEDIATEK CONFIDENTIAL FOR dengzhenli@far-sightedmobile.com USE ONLY

This document contains information that is proprietary to MediaTek Inc.
Unauthorized reproduction or disclosure of this information in whole or in part is strictly prohibited.

3 Micro-Controller Unit Peripherals

3.1 Pulse-Width Modulation Outputs (2 Channel)

3.1.1 General Description

2 generic pulse-width modulators are implemented to generate pulse sequences with programmable frequency and duty cycles for LCD backlight. As long as the internal counter value is bigger than or equal to the threshold value, the duration of the PWM output signal is LOW. The waveform is shown in Figure 19.

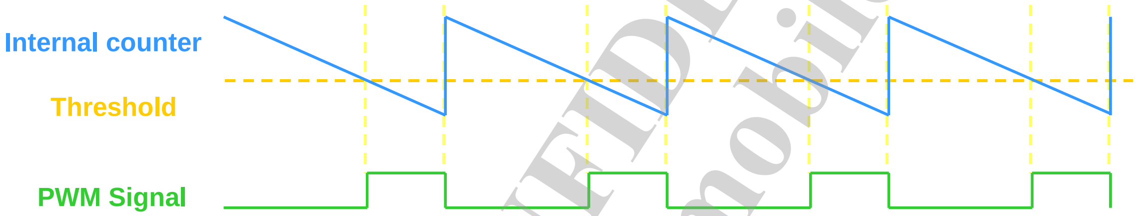

Figure 19. PWM waveform

The frequency and volume of the PWM output signal are determined by PWM1_COUNT, PWM1_THRES and PWM1_CON. The POWERDOWN (pdn1_pwm) signal is applied to power-down the PWM_1ch module. When PWM_1ch is deactivated (pwm1_pdn=1), the output is in the LOW state.

The output PWM frequency is determined by:

$$\frac{CLK}{CLOCK_DIV \times (PWM_COUNT+1)} \quad \mathrm{CLK} = 13000000 \text{ when } \mathrm{CLKSEL} = 0, CLK = 32000 \, when CLKSEL = 1$$

CLOCK_DIV = 1, when CLK[1:0] = 00b
CLOCK_DIV = 2, when CLK[1:0] = 01b
CLOCK_DIV = 4, when CLK[1:0] = 10b
CLOCK_DIV = 8, when CLK[1:0] = 11b

The output PWM duty cycle is determined by: $\frac{PWM_THRES}{PWM_COUNT+1}$

Note: PWM_THRES should be less than the PWM_COUNT. If this condition is not satisfied, the output pulse of the PWM will always be HIGH.

Figure 20 shows the PWM waveform with the indicated register values.

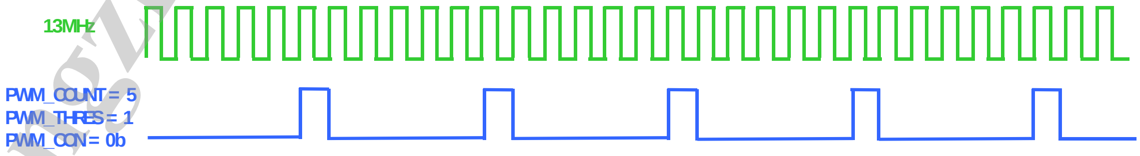

This document contains information that is proprietary to MediaTek Inc.
Unauthorized reproduction or disclosure of this information in whole or in part is strictly prohibited.
MEDIATEK CONFIDENTIAL FOR dengzhenli@far-sightedmobile.com USE ONLY

Figure 20. PWM waveform with register values

3.1.2 Register Definition

Module name: Pulse Width Modulation base address: (+A00E0000h)

Address	Name	Width	Register function
A00E0000	PWM1_CTRL_ADDR	16	PWM1 control register
A00E0004	PWM1_COUNT_ADDR	16	PWM1 max counter value register
A00E0008	PWM1_THRESH_ADDR	16	PWM1 threshold value register

A00E0000 PWM1_CTRL_ADDR PWM1 Control Register 0000

Bit	15	14	13	12	11	10	9	8	7	6	5	4	3	2	1	0
Name														PWM1_CLK_SEL	PWM1_CLK_DIV	
Type														RW	RW	
Reset														0	0	0

Bit(s)	Mnemonic	Name	Description
2	PWM1_CLK_SEL	CLK_SEL	**Selects source clock frequency of PWM1** 0: CLK = 13MHz 1: CLK = 32kHz
1:0	PWM1_CLK_DIV	CLK_DIV	**Selects clock prescaler scale of PWM1** 2'b00: f = fclk 2'b01: f = fclk/2 2'b10: f = fclk/4 2'b11: f = fclk/8

A00E0004 PWM1_COUNT_ADDR PWM1 Max. Counter Value Register 1FFF

Bit	15	14	13	12	11	10	9	8	7	6	5	4	3	2	1	0
Name				PWM1_COUNT												
Type				RW												
Reset				1	1	1	1	1	1	1	1	1	1	1	1	1

Bit(s)	Mnemonic	Name	Description
12:0	PWM1_COUNT	PWM1_COUNT	**PWM1 maximum counter value** This value is the initial value of the internal counter. Regardless of the operation mode, if PWM1_COUNT is written while the internal counter is counting backwards, the new initial value will not take effect until the internal counter counts down to 0, i.e. a complete period.

A00E0008 PWM1_THRESH_ADDR PWM1 Threshold Value Register 0000

Bit	15	14	13	12	11	10	9	8	7	6	5	4	3	2	1	0
Name				PWM1_THRES												
Type				RW												

This document contains information that is proprietary to MediaTek Inc.
Unauthorized reproduction or disclosure of this information in whole or in part is strictly prohibited.
MEDIATEK CONFIDENTIAL FOR dengzhenli@far-sightedmobile.com USE ONLY

Reset				0	0	0	0	0	0	0	0	0	0	0	0	0

Bit(s)	Mnemonic	Name	Description
12:0	**PWM1_THRES**	PWM1_THRES	**PWM1 threshold value** When the internal counter value is bigger than or equal to PWM1_THRES, the PWM1 output signal will be "0". When the internal counter is less than PWM1_THRES, the PWM1 output signal will be "1".

Module name: Pulse Width Modulation base address: (+A0280000h)

Address	Name	Width	Register function
A0280000	**PMW4_CTRL_ADDR**	16	PMW4 control register
A0280004	**PMW4_COUNT_ADDR**	16	PMW4 max counter value register
A0280008	**PMW4_THRESH_ADDR**	16	PMW4 threshold value register

A0280000 PMW4_CTRL_ADDR PMW4 Control Register 0000

Bit	15	14	13	12	11	10	9	8	7	6	5	4	3	2	1	0
Name														**PMW4_CLK_SEL**	**PMW4_CLK_DIV**	
Type														RW	RW	
Reset														0	0	0

Bit(s)	Mnemonic	Name	Description
2	**PMW4_CLK_SEL**	CLK_SEL	**Selects source clock frequency of PMW4** 0: CLK = 13MHz 1: CLK = 32kHz
1:0	**PMW4_CLK_DIV**	CLK_DIV	**Selects clock prescaler scale of PMW4** 2'b00: f = fclk 2'b01: f = fclk/2 2'b10: f = fclk/4 2'b11: f = fclk/8

A0280004 PMW4_COUNT_ADDR PMW4 Max. Counter Value Register 1FFF

Bit	15	14	13	12	11	10	9	8	7	6	5	4	3	2	1	0
Name				**PMW4_COUNT**												
Type				RW												
Reset				1	1	1	1	1	1	1	1	1	1	1	1	1

Bit(s)	Mnemonic	Name	Description
12:0	**PMW4_COUNT**	PMW4_COUNT	**PMW4 maximum counter value** This value is the initial value of the internal counter. Regardless of the operation mode, if PMW4_COUNT is written while the internal counter is counting backwards, the new initial value will not take effect until the internal counter counts down to 0, i.e. a complete period.

MEDIATEK CONFIDENTIAL FOR dengzhenli@far-sightedmobile.com USE ONLY

This document contains information that is proprietary to MediaTek Inc.
Unauthorized reproduction or disclosure of this information in whole or in part is strictly prohibited.

A0280008 **PMW4_THRESH_ADDR** **PMW4 Threshold Value Register** **0000**

Bit	15	14	13	12	11	10	9	8	7	6	5	4	3	2	1	0
Name				PMW4_THRES												
Type				RW												
Reset				0	0	0	0	0	0	0	0	0	0	0	0	0

Bit(s)	Mnemonic	Name	Description
12:0	PMW4_THRES	PMW4_THRES	**PMW4 threshold value** When the internal counter value is bigger than or equal to PMW4_THRES, the PMW4 output signal will be "0". When the internal counter is less than PMW4_THRES, the PMW4 output signal will be "1".

Module name: PWM_2CH base address: (+A0740000h)

Address	Name	Width	Register Function
A074000C	PWM2_CTRL	16	**PWM2 control register** Selects CLK SRC and prescaler scale.
A0740014	PWM2_THRES	16	**PWM2 threshold value register** Controls the duty of waveform
A0740018	PWM3_CTRL	16	**PWM3 control register** Select CLK SRC and prescaler scale.
A074001C	PWM3_COUNT	16	**PWM3 max counter value register** Configures internal counter's max. value
A0740020	PWM3_THRES	16	**PWM3 threshold value register**

A074000C **PWM2_CTRL** **PWM2 Control Register** **0000**

Bit	15	14	13	12	11	10	9	8	7	6	5	4	3	2	1	0
Name														PWM2_CLK_SEL		
Type														RW		
Reset														1		

Bit(s)	Name	Description
2	PWM2_CLK_SEL	**Selects PWM2 CLK** 0: CLK = 13M CLK 1: CLK = 32k CLK

A0740014 **PWM2_THRES** **PWM2 Threshold Value Register** **0000**

Bit	15	14	13	12	11	10	9	8	7	6	5	4	3	2	1	0
Name															PWM2_THRES	
Type															RW	
Reset															0	0

MEDIATEK CONFIDENTIAL
FOR dengzhenli@far-sightedmobile.com USE ONLY

This document contains information that is proprietary to MediaTek Inc.
Unauthorized reproduction or disclosure of this information in whole or in part is strictly prohibited.

Bit(s)	Name	Description
1:0	PWM2_THRES	**PWM2 threshold value** 0: Duty = 0% 1: Duty = 50% 2: Duty = 100%

A0740018 PWM3_CTRL PWM3 Control Register 0000

Bit	15	14	13	12	11	10	9	8	7	6	5	4	3	2	1	0
Name													PWM3_ALWAYS_HIGH	PWM3_CLK_SEL	PWM3_CLK_DIV	
Type													RW	RW	RW	
Reset													0	0	0	0

Bit(s)	Name	Description
3	PWM3_ALWAYS_HIGH	**When pwm3_thresh is set to be bigger than pwm3_width, which means the PWM output is always high, the driver should set this register to 1.** It is specially used by ISINK. 0: Duty! = 100% 1: Duty = 100%
2	PWM3_CLK_SEL	**Selects PWM3 CLK** 0: CLK = 13M CLK 1: CLK = 32k CLK
1:0	PWM3_CLK_DIV	**PWM3 CLK division** 2'b0: f = fclk 2'b1: f = fclk/2 2'b2: f = fclk/4 2'b3: f = fclk/8

A074001C PWM3_COUNT PWM3 Max Counter Value Register 1FFF

Bit	15	14	13	12	11	10	9	8	7	6	5	4	3	2	1	0
Name				PWM3_COUNT												
Type				RW												
Reset				1	1	1	1	1	1	1	1	1	1	1	1	1

Bit(s)	Name	Description
12:0	PWM3_COUNT	**PWM3 maximum counter value** This value is the initial value of the internal counter. Regardless of the operation mode, if PWM3_COUNT is written while the internal counter is counting backwards, the new initial value will not take effect until the internal counter counts down to 0, i.e. a complete period.

A0740020 PWM3_THRES PWM3 Threshold Value Register 0000

Bit	15	14	13	12	11	10	9	8	7	6	5	4	3	2	1	0
Name				PWM3_THRES												
Type				RW												

This document contains information that is proprietary to MediaTek Inc.
Unauthorized reproduction or disclosure of this information in whole or in part is strictly prohibited.

MEDIATEK CONFIDENTIAL
FOR dengzhenli@far-sightedmobile.com USE ONLY

Reset				0	0	0	0	0	0	0	0	0	0	0	0	0

Bit(s)	Name	Description
12:0	PWM3_THRES	**PWM3 threshold value** When the internal counter value is bigger than or equal to PWM3_THRES, the PWM3 output signal will be 0. When the internal counter is less than PWM3_THRES, the PWM3 output signal will be 1.

3.2 SIM Interface

MT6261A contains two dedicated smart card interfaces to allow the MCU to access two SIM cards. Each interface can operate via 5 terminals. See Figure 21, SIMVCC, SIMSEL, SIMRST, SIMCLK and SIMDATA are for one SIM interface, and SIM2VCC, SIM2SEL, SIM2RST, SIM2CLK and SIM2DATA are for the other SIM interface.

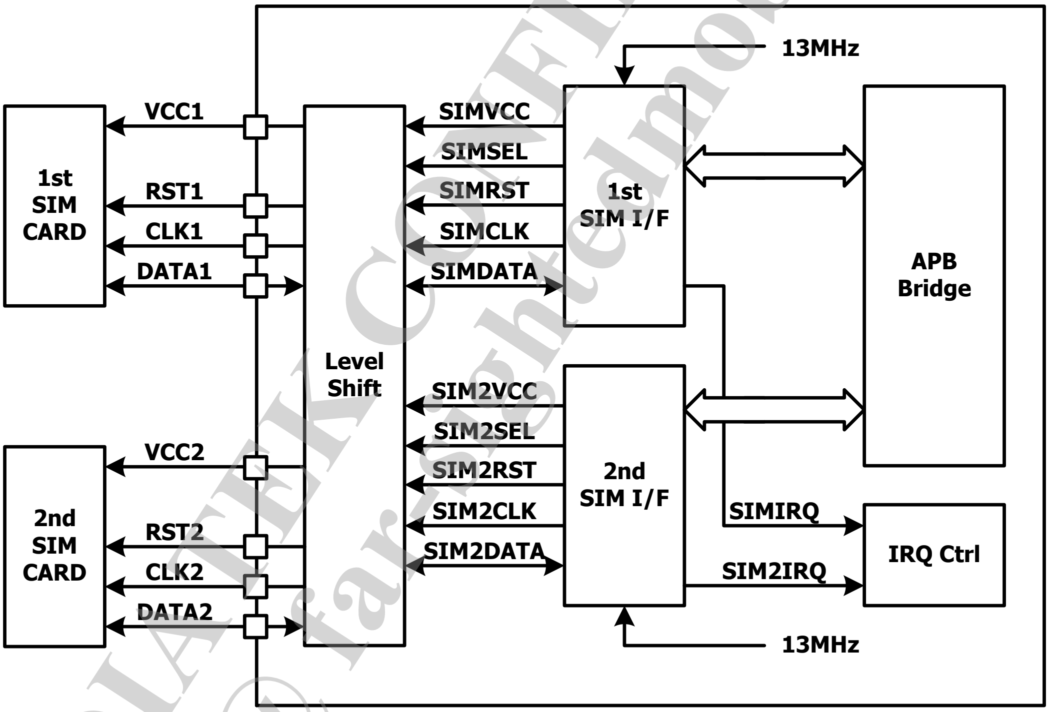

Figure 21. Block diagram of SIM interface

The functions of the two SIM interfaces are identical; therefore, only the first SIM interface will be described in this document. SIMVCC is used to control the external voltage supply to the SIM card, and SIMSEL determines the regulated smart card supply voltage. SIMRST is used as the SIM card reset signal. Besides, SIMDATA and SIMCLK are used for data exchange.

The SIM interface is a half duplex asynchronous communication port, and its data format is composed of ten consecutive bits: a start bit in state “low”, eight information bits and a tenth bit used for parity checking. The data format can be divided into two modes as follows:

This document contains information that is proprietary to MediaTek Inc.
Unauthorized reproduction or disclosure of this information in whole or in part is strictly prohibited.

- Direct convention mode (ODD = SDIR = SINV = 0)

  SB D0 D1 D2 D3 D4 D5 D6 D7 PB
  SB: Start bit (in state "low")
  Dx: Data byte (LSB is the first and logic level ONE is in state "high")
  PB: Even parity check bit

- Inverse convention mode (ODD = SDIR = SINV = 1)

  SB N7 N6 N5 N4 N3 N2 N1 N0 PB
  SB: Start bit (in state "low")
  Nx**:** Data byte (MSB is the first and logic level ONE is in state "low")
  PB: Odd parity check bit

If the receiver obtains a wrong parity bit, it will respond by pulling the SIMDATA "low" to inform the transmitter, and the transmitter will retransmit the character.

If the receiver is an SIM card, the error response will start 0.5 bit after the PB and may last for 1 ~ 2-bit period. If the receiver is an SIM interface, the error response will start 0.5 bit after the PB and last for 1.5-bit period.

If the SIM interface is a transmitter, it will take total 14 bits guard period wherever the error response appears. If the receiver shows the error response, the SIM interface will retransmit the previous character again, or it will transmit the next character.

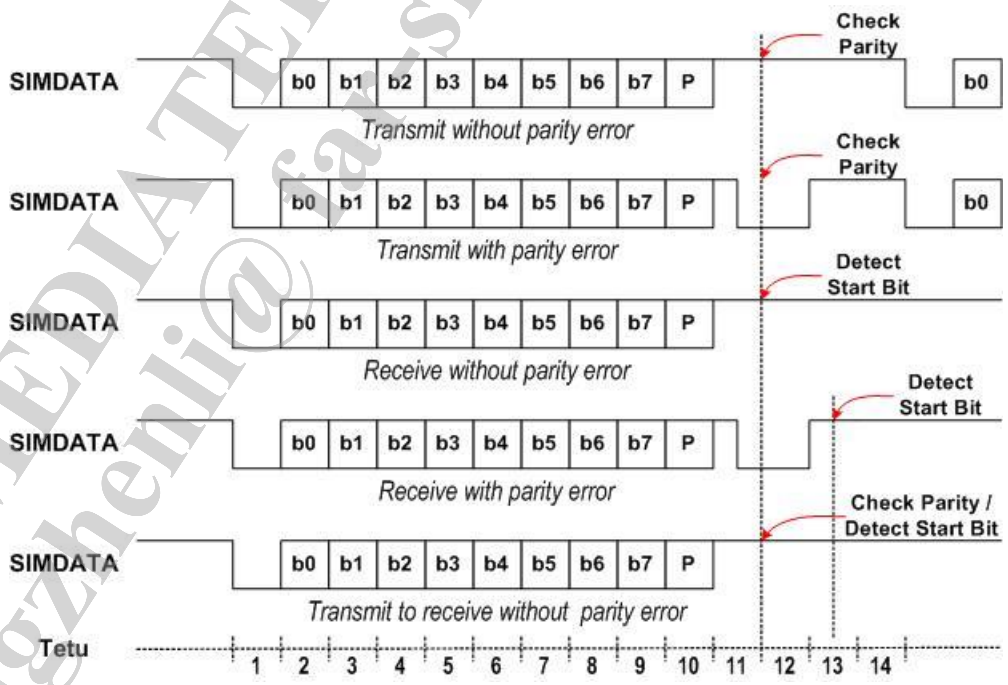

This document contains information that is proprietary to MediaTek Inc.
Unauthorized reproduction or disclosure of this information in whole or in part is strictly prohibited.
MEDIATEK CONFIDENTIAL FOR dengzhenli@far-sightedmobile.com USE ONLY

Figure 22. Timing diagram of SIM interface

3.2.1 Register Definition

When the MCU controls two SIM card interfaces, all registers will be duplicated to two copies but with different base address. n = "0" is for the 1st SIM card interface; n=1 is for the 2nd SIM card interface. For example, address SIMIF0+0000h is mapped to the SIMIF0_SIM_CTRL register while address SIMIF1+0000h is mapped to the SIMIF1_SIM_CTRL register.

3.2.1.1 Register Overview

MCU register address (hex)	Acronym	Description
1st SIM card interface		
SIMIF0+0000h	SIMIF0_SIM_CTRL	Control register
SIMIF0+0004h	SIMIF0_SIM_CONF	Configuration register
SIMIF0+0008h	SIMIF0_SIM_BRR	Baudrate register
SIMIF0+0010h	SIMIF0_SIM_IRQEN	Interrupt enabling register
SIMIF0+0014h	SIMIF0_SIM_STS	Status register
SIMIF0+0018h	SIMIF0_SIM_CLR_STA	SIM clear status
SIMIF0+0020h	SIMIF0_SIM_RETRY	Retry limit register
SIMIF0+0024h	SIMIF0_SIM_TIDE	FIFO tide mark register
SIMIF0+0030h	SIMIF0_SIM_DATA	TX/RX data register
SIMIF0+0034h	SIMIF0_SIM_COUNT	FIFO count register
SIMIF0+0040h	SIMIF0_SIM_ATIME	Activation time register
SIMIF0+0044h	SIMIF0_SIM_DTIME	Deactivation time register
SIMIF0+0048h	SIMIF0_SIM_TOUT	Character to character waiting time register
SIMIF0+004Ch	SIMIF0_SIM_GTIME	Block to block guard time register
SIMIF0+0050h	SIMIF0_SIM_ETIME	Block to error signal time register
SIMIF0+0054h	SIMIF0_SIM_EXT_TIME	Extend data I/O state switch time register
SIMIF0+0058h	SIMIF0_SIM_CGTIME	Character to character guard time register
SIMIF0+0060h	SIMIF0_SIM_INS	Command header register : INS
SIMIF0+0064h	SIMIF0_SIM_IMP3	Command header register : P3
SIMIF0+0068h	SIMIF0_SIM_SW1	Procedure byte register : SW1
SIMIF0+006Ch	SIMIF0_SIM_SW2	Procedure byte register : SW2
SIMIF0+0070h	SIMIF0_SIM_ATRSTA	ATR state register
SIMIF0+0074h	SIMIF0_SIM_STATUS	Protocol state register
SIMIF0+0080h	SIMIF0_SIM_DMADATA	TX/RX data register for DMA
SIMIF0+0090h	SIMIF0_SIM_DBG	Debug register
SIMIF0+0094h	SIMIF0_SIM_DBGDATA	FIFO data debug register
SIMIF0+00A0h	SIMIF0_SIM_SCLK	SCLK PAD control register
SIMIF0+00A4h	SIMIF0_SIM_SRST	SRST PAD control register
SIMIF0+00A8h	SIMIF0_SIM_SIO	SIO PAD control register

This document contains information that is proprietary to MediaTek Inc.
Unauthorized reproduction or disclosure of this information in whole or in part is strictly prohibited.
MEDIATEK CONFIDENTIAL FOR dengzhenlie@fareightmobile.com USE ONLY

MCU register address (hex)	Acronym	Description
SIMIF0+00ACh	SIMIF0_SIM_MON	PAD monitor register
SIMIF0+00B0h	SIMIF0_SIM_SEL	Testing output select
2nd SIM card interface		
SIMIF1+0000h	SIMIF1_SIM_CTRL	Control register
SIMIF1+0004h	SIMIF1_SIM_CONF	Configuration register
SIMIF1+0008h	SIMIF1_SIM_BRR	Baudrate register
SIMIF1+0010h	SIMIF1_SIM_IRQEN	Interrupt enabling register
SIMIF1+0014h	SIMIF1_SIM_STS	Status register
SIMIF1+0018h	SIMIF1_SIM_CLR_STA	Sim clear status
SIMIF1+0020h	SIMIF1_SIM_RETRY	Retry limit register
SIMIF1+0024h	SIMIF1_SIM_TIDE	FIFO tide mark register
SIMIF1+0030h	SIMIF1_SIM_DATA	TX/RX data register
SIMIF1+0034h	SIMIF1_SIM_COUNT	FIFO count register
SIMIF1+0040h	SIMIF1_SIM_ATIME	Activation time register
SIMIF1+0044h	SIMIF1_SIM_DTIME	Deactivation time register
SIMIF1+0048h	SIMIF1_SIM_TOUT	Character to character waiting time register
SIMIF1+004Ch	SIMIF1_SIM_GTIME	Block to block guard time register
SIMIF1+0050h	SIMIF1_SIM_ETIME	Block to error signal time register
SIMIF1+0054h	SIMIF1_SIM_EXT_TIME	Extend data I/O state switch time register
SIMIF1+0058h	SIMIF1_SIM_CGTIME	Character to character guard time register
SIMIF1+0060h	SIMIF1_SIM_INS	Command header register : INS
SIMIF1+0064h	SIMIF1_SIM_IMP3	Command header register : P3
SIMIF1+0068h	SIMIF1_SIM_SW1	Procedure byte register : SW1
SIMIF1+006Ch	SIMIF1_SIM_SW2	Procedure byte register : SW2
SIMIF1+0070h	SIMIF1_SIM_ATRSTA	ATR state register
SIMIF1+0074h	SIMIF1_SIM_STATUS	Protocol state register
SIMIF1+0080h	SIMIF1_SIM_DMADATA	TX/RX data register for DMA
SIMIF1+0090h	SIMIF1_SIM_DBGD	Debug register
SIMIF1+0094h	SIMIF1_SIM_DBGDATA	FIFO data debug register
SIMIF1+00A0h	SIMIF1_SIM_SCLK	SCLK PAD control register
SIMIF1+00A4h	SIMIF1_SIM_SRST	SRST PAD control register
SIMIF1+00A8h	SIMIF1_SIM_SIO	SIO PAD control register
SIMIF1+00ACh	SIMIF1_SIM_MON	PAD monitor register
SIMIF1+00B0h	SIMIF1_SIM_SEL	Testing output select

3.2.1.2 Register Description

SIMn+0000h SIM Module Control Register SIMIFN_SIM_CTRL

bit	15	14	13	12	11	10	9	8	7	6	5	4	3	2	1	0
Name										VCCCTRL	VCCLV	RSTCTRL	RSTLV	WRST	CSTOP	SIMON

This document contains information that is proprietary to MediaTek Inc.
Unauthorized reproduction or disclosure of this information in whole or in part is strictly prohibited.
MEDIATEK CONFIDENTIAL FOR dengzhenli@far-sightedmobile.com USE ONLY

Type										R/W	R/W	R/W	R/W	W	R/W	R/W
Reset										0	0	0	0	0	0	0

SIMON Conrols SIM card power-up/power-down
- **0** 1-to-0 change will start the card deactivation sequence.
- **1** 0-to-1 change will start the card activation sequence.

CSTOP Enables clock stop mode. Together with CPOL in the SIM_CONF register, it determines the polarity of SIMCLK in this mode.
- **0** Enable SIMCLK output
- **1** Disable SIMCLK outpu

WRST Controls SIM card warm reset

RSTLV Controls SIMRST parking level in SIMRST direct control mode

RSTCTRL Enables SIMRST direct control mode

VCCLV Controls SIMVCC parking level in SIMVCC direct control mode

VCCCTRL Enables SIMVCC direct control mode

SIMn+0004h SIM Module Configuration Register SIMIFN_SIM_CONF

bit	15	14	13	12	11	10	9	8	7	6	5	4	3	2	1	0
Name			**T1TX2RXEN**	**TXRDIS**	**RXRDIS**	**HFEN**	**T0EN**	**T1EN**	**TOUT**	**SIMSEL**	**ODD**	**SDIR**	**SINV**	**CPOL**	**TXACK**	**RXACK**
Type			R/W	R/W	R/W	R/W	R/W	R/W	R/W	R/W	R/W	R/W	R/W	R/W	R/W	R/W
Reset			0	0	0	0	0	0	0	0	0	0	0	0	0	0

RXACK Handshaking control of SIM card reception error
- **0** Disable character receipt handshaking
- **1** Enable character receipt handshaking

TXACK Handshaking control of SIM card transmission error
- **0** Disable character transmission handshaking
- **1** Enable character transmission handshaking

CPOL SIMCLK polarity control in clock stop mode
- **0** Make SIMCLK stop in “low” level
- **1** Make SIMCLK stop in “high” level

SINV Data inversion mode
- **0** Does not invert the transmitted and received data; data logic ONE is in “high” state
- **1** Invert the transmitted and received data; data logic ONE is in “low” state

SDIR Direction of data transfer
- **0** LSB is transmitted and received first.
- **1** MSB is transmitted and received first.

ODD Selecting odd or even parity
- **0** Even parity
- **1** Odd parity

SIMSEL Selects SIM card supply voltage (also configure SIMSEL in PMU register)
- **0** SIMSEL pin is set to “low” level, 1.8V
- **1** SIMSEL pin is set to “high” level, 3V

TOUT Controls SIM work waiting time counter

MEDIATEK CONFIDENTIAL FOR dengzhenli@far-sighted-mobile.com USE ONLY

This document contains information that is proprietary to MediaTek Inc.
Unauthorized reproduction or disclosure of this information in whole or in part is strictly prohibited.

0 Disable time-out counter
1 Enable time-out counter

T1EN Controls T = 1 protocol controller
0 Disable T = 1 protocol controller
1 Enable T = 1 protocol controller

T0EN Controls T = 0 protocol controller
0 Disable T = 0 protocol controller
1 Enable T = 0 protocol controller

HFEN Controls hardware flow
0 Disable hardware flow control
1 Enable hardware flow control

RXRDIS Disables RX DMA request
0 Enable RX DMA request (default)
RXRDIS must be set to 0 for protocol T = 1
1 Disable RX DMA request
During TX transmission and not protocol T = 1, the recommended setting of RXRDIS is 1

TXRDIS Disables TX DMA request disable
0 Enable TX DMA request (default)
TXRDIS must be set to 0 for protocol T = 1
1 Disable TX DMA request
During RX transmission and not protocol T = 1, the recommended setting of TXRDIS is 1.

T1TX2RXEN Enables DMA type auto switch for protocol T = 1 (this function is not supported in MT6261A)
0 Disable DMA type auto switch function
If the current block is TX transmission and the next block is also TX transmission, disabling this bit is recommended
1 Enable DMA type auto switch function
If the current block is TX transmission and the next block is RX transmission, enabling this bit is recommended to improve transmission quality

SIMn +0008h SIM Baudrate Register SIMIFN_SIM_BRR

bit	15	14	13	12	11	10	9	8	7	6	5	4	3	2	1	0
Name						**ETU[8:0]**									**SIMCLK[1:0]**	
Type						R/W									R/W	
Reset						372d									01	

SIMCLK Sets up SIMCLK frequency
00 Reserved
01 13/4 MHz
10 13/8 MHz
11 13/12 MHz

ETU Determines duration of elementary time unit in SIMCLK unit

This document contains information that is proprietary to MediaTek Inc.
Unauthorized reproduction or disclosure of this information in whole or in part is strictly prohibited.
FOR dengzhenli@ fair-sightedmobile.com USE ONLY
MEDIATEK CONFIDENTIAL

The minimum valid setting of ETU is 8

SIMn +0010h SIM Interrupt Enable Register SIMIFN_SIM_IRQEN

bit	15	14	13	12	11	10	9	8	7	6	5	4	3	2	1	0
Name					UDRUN	EDCERR	T1END	RXERR	T0END	SIMOFF	ATRERR	TXERR	TOUT	OVRUN	RXTIDE	TXTIDE
Type					R/W	R/W	R/W	R/W	R/W	R/W	R/W	R/W	R/W	R/W	R/W	R/W
Reset					0	0	0	0	0	0	0	0	0	0	0	0

For all the bits

0 Disable interrupt

1 Enable interrupt

SIMn +0014h SIM Module Status Register SIMIFN_SIM_STS

bit	15	14	13	12	11	10	9	8	7	6	5	4	3	2	1	0
Name					UDRUN	EDCERR	T1END	RXERR	T0END	SIMOFF	ATRERR	TXERR	TOUT	OVRUN	RXTIDE	TXTIDE
Type					R/C	R/C	R/C	R/C	R/C	R/C	R/C	R/C	R/C	R/C	R	R
Reset				-	-	-	-	-	-	-	-	-	-	-	-	-

TXTIDE The interrupt occurs when the number of transmitted data in the FIFO is less than the transmitted tide.

RXTIDE The interrupt occurs when the number of received data in the FIFO is less than the received tide.

OVRUN Receiving FIFO overflow interrupt occurrs.

TOUT Between characters time-out interrupt occurs.

TXERR Character transmission error interrupt occurs.

ATRERR ATR start time-out interrupt occurrs.

SIMOFF Card deactivation completed interrupt occurs.

T0END Data transfer handled by T = 0 controller completed interrupt occurs.

RXERR Character reception error interrupt occurrs.

T1END Data transfer handled by T = 1 controller completed interrupt occurs.

EDCERR T = 1 controller CRC error occurs.

UDRUN FIFO underflow interrupt occurs (still reading FIFO when FIFO is empty).

SIMn +0018h SIM Clear Status Register SIMIFN_SIM_CLR_STA

bit	15	14	13	12	11	10	9	8	7	6	5	4	3	2	1	0
Name																CLR_STA
Type																RO
Reset																0

MEDIATEK CONFIDENTIAL
FOR dengzhenli@far-sightedmobile.com
INTERNAL USE ONLY

This document contains information that is proprietary to MediaTek Inc.
Unauthorized reproduction or disclosure of this information in whole or in part is strictly prohibited.

CLA_STA 1: Clear SIMIF. Do not write to SIMIF; 0: SIMIF clear finished or not in clear status, you can write data to SIMIF.

SIMn +0020h SIM Retry Limit Register SIMIFN_SIM_RETRY

bit	15	14	13	12	11	10	9	8	7	6	5	4	3	2	1	0
Name						**TXRETRY[2:0]**								**RXRETRY[2:0]**		
Type						R/W								R/W		
Reset						3h								3h		

RXRETRY Specifies maximum number of receive retries allowed when parity error occurrs.
TXRETRY Specifies maximum number of transmit retries allowed when parity error occurrs.

SIMn +0024h SIM FIFO Tide Mark Register SIMIFN_SIM_TIDE

bit	15	14	13	12	11	10	9	8	7	6	5	4	3	2	1	0
Name					**TXTIDE[3:0]**								**RXTIDE[3:0]**			
Type					R/W								R/W			
Reset					0h								0h			

RXTIDE Trigger point of RXTIDE interrupt
TXTIDE Trigger point of TXTIDE interrupt

SIMn +0030h Data Register Used As Tx/Rx Data Register SIMIFN_SIM_DATA

bit	15	14	13	12	11	10	9	8	7	6	5	4	3	2	1	0
Name									**DATA[7:0]**							
Type									R/W							
Reset									-							

DATA Eight data digits, corresponding to the character being read or written

SIMn +0034h SIM FIFO Count Register SIMIFN_SIM_COUNT

bit	15	14	13	12	11	10	9	8	7	6	5	4	3	2	1	0
Name												**COUNT[4:0]**				
Type												R/W				
Reset												0h				

COUNT Number of characters in the SIM FIFO when read and flushes when written.

SIMn +0040h SIM Activation Time Register SIMIFN_SIM_ATIME

bit	15	14	13	12	11	10	9	8	7	6	5	4	3	2	1	0
Name							**ATIME[9:0]**									
Type							R/W									

This document contains information that is proprietary to MediaTek Inc.
Unauthorized reproduction or disclosure of this information in whole or in part is strictly prohibited.
MEDIATEK CONFIDENTIAL FOR dengzhenli@ far-sightedmobile.com USE ONLY

Reset							2BEh									

ATIME Defines the duration, in 64 SIM clock cycles, of the time taken for each of the three stages of the card activation process, from SIMON transiting to "high" to turning on VCC, from turning on VCC to pull data "high" and then from pulling data "high" to turning on CLK.

SIMn +0044h SIM Deactivation Time Register SIMIFN_SIM_DTIME

bit	15	14	13	12	11	10	9	8	7	6	5	4	3	2	1	0
Name											DTIME[5:0]					
Type											R/W					
Reset											Fh					

DTIME Defines the duration, in 64 13 MHz clock cycles, of the time taken for each of the three stages of the card deactivation sequence, from pulling RST "low" to turning off CLK, from turning off CLK to pulling data "low", from pulling data "low" to turning off VCC.

SIMn +0048h Character to Character Waiting Time Register SIMIFN_SIM_TOUT

bit	31	30	29	28	27	26	25	24	23	22	21	20	19	18	17	16
Name											WTIME[21:0]					
Type											R/W					
Reset											260h					
Bit	15	14	13	12	11	10	9	8	7	6	5	4	3	2	1	0
Name	WTIME[21:0]															
Type	R/W															
Reset	260h															

WTIME Maximum interval between the leading edge of two consecutive characters in 16 ETU units

SIMn +004Ch Block to Block Guard Time Register SIMIFN_SIM_GTIME

bit	15	14	13	12	11	10	9	8	7	6	5	4	3	2	1	0
Name													GTIME[3:0]			
Type													R/W			
Reset													10d			

GTIME Minimum interval between the leading edge of two consecutive characters sent in opposite directions in ETU unit

SIMn +0050h Block to Error Signal Time Register SIMN_SIM_ETIME

bit	15	14	13	12	11	10	9	8	7	6	5	4	3	2	1	0
Name											ETIME[5:0]					
Type											R/W					
Reset											15d					

This document contains information that is proprietary to MediaTek Inc.
Unauthorized reproduction or disclosure of this information in whole or in part is strictly prohibited.

ETIME Defines the interval, in 1/16 ETU unit, between the end of the transmitted parity bit and the time to check the parity error signal sent from SIM card.

SIMn +0054h Active High Period Control Register SIMIFN_SIM_EXT_TIME

bit	15	14	13	12	11	10	9	8	7	6	5	4	3	2	1	0
Name													EXT_TIME[3:0]			
Type													R/W			
Reset													1d			

EXT_TIME Defines the interval, in 1/16 ETU unit, between the end of the transmitted parity bit and the time to switch SIO to input mode. This value should be smaller than ETIME.

SIMn +0058h Character to Character Guard Time Register SIMIFN_SIM_CGTIME

bit	15	14	13	12	11	10	9	8	7	6	5	4	3	2	1	0
Name									CGTIME[7:0]							
Type									R/W							
Reset									2h							

CGTIME Defines the minimum interval between the leading edges of two consecutive characters in ETU unit.
In the same transmission direction, the minimum interval is (12 + CGTIME) ETU. In opposite transmission direction, the minimum interval is (12 + CGTIME + GTIME) ETU.

SIMn +0060h SIM Command Header Register: INS SIMIFN_SIM_INS

bit	15	14	13	12	11	10	9	8	7	6	5	4	3	2	1	0
Name								INSD	SIMINS[7:0]							
Type								R/W	R/W							
Reset								0h	0h							

SIMINS This field should be identical to the INS instruction code. When writing to this register, the T = 0 controller will be activated and data transfer initiated.

INSD Instruction direction

0 T = 0 controller receives data from the SIM card.
1 T = 0 controller sends data to the SIM card.

SIMn +0064h SIM Command Header Register: P3 SIMIFN_SIM_IMP3 (ICC_LEN)

bit	15	14	13	12	11	10	9	8	7	6	5	4	3	2	1	0
Name								SIMP3 [8]	SIMP3[7:0]							
Type								R	R/W							

This document contains information that is proprietary to MediaTek Inc.
Unauthorized reproduction or disclosure of this information in whole or in part is strictly prohibited.

Reset								0h	0h							

SIMP3 This field should be identical to the P3 instruction code. It should be written prior to the SIM_INS register. When the data transfer is being conducted, this field will show the number of the remaining data to be sent or to be received.

SIMn +0068h SIM Procedure Byte Register: SW1 **SIMIFN_SIM_SW1 (ICC_LEN)**

bit	15	14	13	12	11	10	9	8	7	6	5	4	3	2	1	0
Name									SIMSW1[7:0]							
Type									R							
Reset									0h							

SIMSW1 This field holds the last received procedure byte for debugging. When the T0END interrupt occurrs, it will keep the SW1 procedure byte.

SIMn +006Ch SIM Procedure Byte Register: SW2 **SIMIFN_SIM_SW2 (ICC_EDC)**

bit	15	14	13	12	11	10	9	8	7	6	5	4	3	2	1	0
Name									SIMSW2[7:0]							
Type									R							
Reset									0h							

SIMSW2 This field holds the SW2 procedure byte

SIMn +0070h SIM ATR State Register **SIMIFN_SIM_ATRSTA**

bit	15	14	13	12	11	10	9	8	7	6	5	4	3	2	1	0
Name								AL	IR							OFF
Type								R	R							R
Reset								0h	0h							1h

The SIM card is initially turned off. After configuring SIMON of SIMn_SIM_CTRL and ATR procedure, SIMn_SIM_ATRSTA will set IR or AL to 1 to indicate the card's feature.

OFF Indicates On/Off of the SIM card
IR SIM card is IR (internal reset) card
AL SIM card is AL (active low reset) card

SIMn +0074h SIM Protocol State Register **SIMIFN_SIM_STATUS**

bit	15	14	13	12	11	10	9	8	7	6	5	4	3	2	1	0
Name											ALL	ONE				IDLE
Type											R	R				R
Reset											0h	0h				1h

This document contains information that is proprietary to MediaTek Inc.
Unauthorized reproduction or disclosure of this information in whole or in part is strictly prohibited.
MEDIATEK CONFIDENTIAL
dengzhen@far-sightedmobile.com

T0 or T1 protocol of the SIM card is initially turned off. When T0 or T1 protocol is turned on, SIMn_SIM_T0STA will transit between ONE or ALL according to the procedure byte of the SIM card.

IDLE SIM card's T0 or T1 protocol is active or idle.
ONE SIM card will send the next byte
ALL SIM card will send all the remaining bytes.

SIMn +0080h Data Register Used As Tx/Rx Data Register SIMIFN_SIM_DMADATA

bit	15	14	13	12	11	10	9	8	7	6	5	4	3	2	1	0
Name									DATA[7:0]							
Type									R/W							
Reset									-							

DATA Eight data digits, corresponding to the character being read or written

SIMn +0090h SIM Module Debug Register SIMIFN_SIM_DBG

bit	31	30	29	28	27	26	25	24	23	22	21	20	19	18	17	16
Name					DBG7	DBG6	DBG5	DBG4				DBG3[4:0]				
Type					R	R	R	R				R				
Reset					0h	0h	0h	0h				0h				
Bit	15	14	13	12	11	10	9	8	7	6	5	4	3	2	1	0
Name				DBG2[4:0]								DBG1[4:0]				
Type				R								R				
Reset				0h								0h				

DBG1 Debugging register 1
DBG2 Debugging register 2
DBG3 Debugging register 3
DBG4 Debugging register 4
DBG5 Debugging register 5
DBG6 Debugging register 6
DBG7 Debugging register 7

SIMn +0094h SIM FIFO Data Debug Register SIMIFN_SIM_DBGDATA

bit	15	14	13	12	11	10	9	8	7	6	5	4	3	2	1	0
Name					DBGRPTR[3:0]				DBGDATA[7:0]							
Type					R				R							
Reset					0h				-							

DBGDATA FIFO data debugging register
There is no impact on data transmission when this register is read.
DBGRPTR FIFO read pointer related to DBGDATA
Automatically increases by 1 after this register is read.

This document contains information that is proprietary to MediaTek Inc.
Unauthorized reproduction or disclosure of this information in whole or in part is strictly prohibited.

SIMn +00A0h SIM SCLK PAD Control Register **SIMIFN_SIM_SCLK**

bit	31	30	29	28	27	26	25	24	23	22	21	20	19	18	17	16
Name															**DEBUG**	**ACD_FUNC**
Type															R/W	R/W
Reset															0h	0h
Bit	**15**	**14**	**13**	**12**	**11**	**10**	**9**	**8**	**7**	**6**	**5**	**4**	**3**	**2**	**1**	**0**
Name	**IES_CTRL**	**IES_LV**			**TDSEL[1:0]**		**RDSEL[1:0]**		**R1**	**R0**	**PUPD**	**SMT**	**E4**	**E2**	**SR[1:0]**	
Type	R/W	R/W			R/W		R/W		R/W	R/W	R/W	R/W	R/W	R/W	R/W	
Reset	0h	0h			0h		0h		0h	0h	0h	1h	0h	1h	3h	

SR Output slew rate control
High asserted. SR = 1, slower slew. SR = 0, no slew rate control.
For SIM card mode, SR[1:0] = [1 1] is the recommended setting to eliminate overshooting/undershooting. For non-SIM card mode, SR[1:0] = [0 0] is set for best speed.

E2 TX driving strength control
For SIM card mode, E2 = [1] is the recommended setting for SCLK/SRST/SIO. (SIO/SRST can use [0])

E4 TX driving strength control
For SIM card mode, E4 = [0] is the recommended setting for SCLK/SRST/SIO.

SMT RX input buffer schmit trigger hysteresis control enable
High asserted. SMT = 1, schmit trigger enable.
For SIM card mode, SMT = [1] is the recommended setting.

PUPD Weak pull-up/pull-down control
0 Pull-up
1 Pull-down

R0 Weak pull-up/pull-down resistance select
Check the table in register "R1".

R1 Weak pull-up/pull-down resistance select
Check the following table.

E	PUPD	R1	R0	R Value
0	0	0	0	High – Z
0	0	0	1	PU – 20k
0	0	1	0	PU – 5k
0	0	1	1	PU – 4k
0	1	0	0	High – Z
0	1	0	1	PD – 75k
0	1	1	0	PD – 75k
0	1	1	1	PD – 37.5k
1	x	x	x	High - Z

RDSEL Selects RX duty

This document contains information that is proprietary to MediaTek Inc.
Unauthorized reproduction or disclosure of this information in whole or in part is strictly prohibited.
MEDIATEK CONFIDENTIAL FOR dengzhenli@far-sightedmobile.com USE ONLY

RDSEL[0]: Input buffer duty high when asserted. (high pulse width adjustment)
RDSEL[1]: Input buffer duty low when asserted. (low pulse width adjustment)
For SIM card mode, RDSEL = [0 0] is the recommended setting.

TDSEL Selects TX duty
TDSEL[0]: Output level shifter duty high when asserted. (high pulse width adjustment)
TDSEL[1]: Output level shifter duty low when asserted. (low pulse width adjustment)
For SIM card mode, TDSEL = [0 0] is the recommended setting.

IES_LV Controls IES (RX input buffer enable) parking level in IES direct control mode
High asserted. Datapath: From IO to O. IES = 0, O = 0.
In quiescent mode, IES = 0 is suggested for power saving.

IES_CTRL Enables IES direct control mode

ACD_FUNC ACD function mode for analog designer

DEBUG Output PAD related signals for monitoring
0 Disable
1 Enable

SIMn +00A4h SIM SRST PAD Control Register **SIMIFN_SIM_SRST**

Bit	15	14	13	12	11	10	9	8	7	6	5	4	3	2	1	0
Name	**IES_CTRL**	**IES_LV**			**TDSEL[1:0]**		**RDSEL[1:0]**		**R1**	**R0**	**PUPD**	**SMT**	**E4**	**E2**	**SR[1:0]**	
Type	R/W	R/W			R/W		R/W		R/W	R/W	R/W	R/W	R/W	R/W	R/W	
Reset	0h	0h			0h		0h		0h	0h	0h	1h	0h	1h	3h	

SR Output slew rate control
High asserted. SR = 1, slower slew. SR = 0, no slew rate control.
For SIM card mode, SR[1:0] = [1 1] is the recommended setting to eliminate overshooting/undershooting. For non-SIM card mode, SR[1:0] = [0 0] is set for best speed.

E2 TX driving strength control
For SIM card mode, E2 = [1] is the recommended setting for SCLK/SRST/SIO. (SIO/SRST can use [0])

E4 TX driving strength control
For SIM card mode, E4 = [0] is the recommended setting for SCLK/SRST/SIO.

SMT RX input buffer schmit trigger hysteresis control enable
High asserted. SMT = 1, schmit trigger enable.
For SIM card mode, SMT = [1] is the recommended setting.

PUPD Weak pull-up/pull-down control
0 Pull-up
1 Pull-down

R0 Weak pull-up/pull-down resistance select
Check the table in register "R1".

R1 Weak pull-up/pull-down resistance select
Check the following table.

E	PUPD	R1	R0	R Value

MEDIATEK CONFIDENTIAL FOR dengzhenli@far-sightedmobile.com USE ONLY

This document contains information that is proprietary to MediaTek Inc.
Unauthorized reproduction or disclosure of this information in whole or in part is strictly prohibited.

E	PUPD	R1	R0	R Value
0	0	0	0	High – Z
0	0	0	1	PU – 20k
0	0	1	0	PU – 5k
0	0	1	1	PU – 4k
0	1	0	0	High – Z
0	1	0	1	PD – 75k
0	1	1	0	PD – 75k
0	1	1	1	PD – 37.5k
1	x	x	x	High - Z

RDSEL Selects RX duty
RDSEL[0]: Input buffer duty high when asserted. (high pulse width adjustment)
RDSEL[1]: Input buffer duty low when asserted. (low pulse width adjustment)
For SIM card mode, RDSEL = [0 0] is the recommended setting.

TDSEL Selects TX duty
TDSEL[0]: Output level shifter duty high when asserted. (high pulse width adjustment)
TDSEL[1]: Output level shifter duty low when asserted. (low pulse width adjustment)
For SIM card mode, TDSEL = [0 0] is the recommended setting.

IES_LV Controls IES (RX input buffer enable) parking level in IES direct control mode
High asserted. Datapath: From IO to O. IES = 0, O = 0.
In quiescent mode, IES = 0 is suggested for power saving.

IES_CTRL Enables IES direct control mode

SIMn +00A8h SIM SIO PAD Control Register SIMIFN_SIM_SIO

Bit	15	14	13	12	11	10	9	8	7	6	5	4	3	2	1	0
Name	IES_CTRL	IES_LV			TDSEL[1:0]		RDSEL[1:0]		R1	R0	PUPD	SMT	E4	E2	SR[1:0]	
Type	R/W	R/W			R/W		R/W		R/W	R/W	R/W	R/W	R/W	R/W	R/W	
Reset	0h	0h			0h		0h		1h	0h	0h	1h	0h	1h	3h	

SR Output slew rate control
High asserted. SR = 1, slower slew. SR = 0, no slew rate control.
For SIM card mode, SR[1:0] = [1 1] is the recommended setting to eliminate overshooting/undershooting. For non-SIM card mode, SR[1:0] = [0 0] is set for best speed.

E2 TX driving strength control
For SIM card mode, E2 = [1] is the recommended setting for SCLK/SRST/SIO. (SIO/SRST can use [0])

E4 TX driving strength control
For SIM card mode, E4 = [0] is the recommended setting for SCLK/SRST/SIO.

SMT RX input buffer schmit trigger hysteresis control enable
High asserted. SMT = 1, schmit trigger enable.
For SIM card mode, SMT = [1] is the recommended setting.

PUPD Weak pull-up/pull-down control

This document contains information that is proprietary to MediaTek Inc.
Unauthorized reproduction or disclosure of this information in whole or in part is strictly prohibited.
MEDIATEK CONFIDENTIAL

0 Pull-up
1 Pull-down

R0 Weak pull-up/pull-down resistance select
Check the table in register "R1".

R1 Weak pull-up/pull-down resistance select
Check the following table.
For SIO, [R1 R0] = [1 0] is the recommended setting for 5k weak pull-up. In 4 SIM application and SIO is connected to external SIM switch, please disable pull-up resistance. ([R1 R0] = [0 0])

E	PUPD	R1	R0	R Value
0	0	0	0	High – Z
0	0	0	1	PU – 20k
0	0	1	0	PU – 5k
0	0	1	1	PU – 4k
0	1	0	0	High – Z
0	1	0	1	PD – 75k
0	1	1	0	PD – 75k
0	1	1	1	PD – 37.5k
1	x	x	x	High - Z

RDSEL Selects RX duty
RDSEL[0]: Input buffer duty high when asserted. (high pulse width adjustment)
RDSEL[1]: Input buffer duty low when asserted. (low pulse width adjustment)
For SIM card mode, RDSEL = [0 0] is the recommended setting.

TDSEL Selects TX duty
TDSEL[0]: Output level shifter duty high when asserted. (high pulse width adjustment)
TDSEL[1]: Output level shifter duty low when asserted. (low pulse width adjustment)
For SIM card mode, TDSEL = [0 0] is the recommended setting.

IES_LV Controlling IES (RX input buffer enable) parking level in IES direct control mode
High asserted. Datapath: From IO to O. IES = 0, O = 0.
In quiescent mode, IES = 0 is suggested for power saving.

IES_CTRL Enables IES direct control mode

SIMn +00ACh SIM Monitor Register **SIMIFN_SIM_MON**

Bit	15	14	13	12	11	10	9	8	7	6	5	4	3	2	1	0
Name		MON12	MON11	MON10		MON9	MON8	MON7		MON6	MON5	MON4		MON3	MON2	MON1
Type		R	R	R		R	R	R		R	R	R		R	R	R
Reset		0h	0h	0h		0h	0h	0h		0h	0h	0h		0h	0h	0h

MON1 Monitor signal 1
MON2 Monitor signal 2
MON3 Monitor signal 3

This document contains information that is proprietary to MediaTek Inc.
Unauthorized reproduction or disclosure of this information in whole or in part is strictly prohibited.
MEDIATEK CONFIDENTIAL FOR dengzhenli@far-sightedmobile.com USE ONLY

MON4 Monitor signal 4
MON5 Monitor signal 5
MON6 Monitor signal 6
MON7 Monitor signal 7
MON8 Monitor signal 8
MON9 Monitor signal 9
MON10 Monitor signal 10
MON11 Monitor signal 11
MON12 Monitor signal 12

SIMn+00B0h SIM Test Select SIMIFN_SIM_SEL

bit	15	14	13	12	11	10	9	8	7	6	5	4	3	2	1	0
Name														SIMSEL		
Type														R/W		
Reset														3'b001		

SIMSEL **Selects** monitor SIMRST, SIMCLK, SIMIO input signal
001 SIMRST input is monitored.
010 SIMCLK input is monitored.
100 SIMSIO input is monitored.
Others No meaning

3.2.2 SIM Card Insertion and Removal

The detection of physical connection to the SIM card and card removal can be done by the external interrupt controller or by GPIO.

3.2.3 Card activation and Deactivation

The card activation and deactivation sequence are both controlled by H/W. The MCU initiates the activation sequence by writing “1” to bit 0 of the SIM_CTRL register, and then the interface performs the following activation sequence:

- Assert SIMRST ”low”
- Set SIMVCC at “high” level and SIMDATA in the reception mode
- Enable SIMCLK clock
- De-assert SIMRST “high” (required if it belongs to active low reset SIM card)

The final step in a typical card session is contacting deactivation in case the card will be electrically damaged. The deactivation sequence is initiated by writing “0” to bit 0 of the SIM_CTRL register, and the interface will perform the following deactivation sequence:

- Assert SIMRST ”low”
- Set SCIMCLK at “low” level

MEDIATEK CONFIDENTIAL
FOR denzhenli@far-sightedmobile.com USE ONLY

This document contains information that is proprietary to MediaTek Inc.
Unauthorized reproduction or disclosure of this information in whole or in part is strictly prohibited.

- Set SIMDATA at “low” level
- Set SIMVCC at “low” level

3.2.4 Answering to Reset Sequence

After the card is activated, a reset operation will result in an answer from the card consisting of the initial character TS, followed by maximum 32 characters. The initial character TS provides a bit synchronization sequence and defines the conventions to interpret data bytes in all subsequent characters.

On reception of the first character, TS, the MCU should read this character, establish the respective required convention and re-program the related registers. These processes should be completed prior to the completion of reception of the next character. Next, the remainder of the ATR sequence will be received, read via the SIM_DATA in the selected convention and interpreted by the S/W.

The timing requirement and procedures for ATR sequence are handled by H/W and shall meet the requirement of ISO 7816-3, as shown in Figure 23.

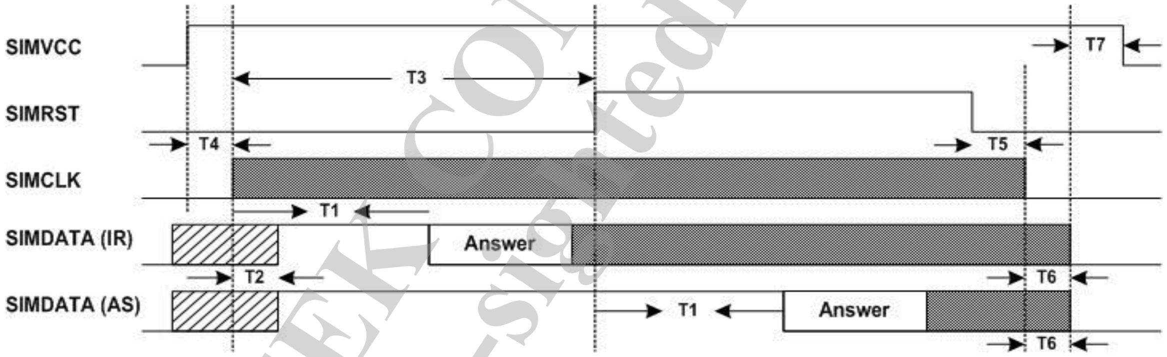

Figure 23. Answering to reset sequence

Table 43. Time-out condition for answering to reset sequence

Time	Value	Comment
T1	> 400 SIMCLK	SIMCLK start to ATR appears
T2	< 200 SIMCLK	SIMCLK start to SIMDATA in reception mode
T3	> 40,000 SIMCLK	SIMCLK start to SIMRST ”high”
T4	-	SIMVCC “high” to SIMCLK start
T5	-	SIMRST “low” to SIMCLK stop
T6	-	SIMCLK stop to SIMDATA ”low”
T7	-	SIMDATA “low” to SIMVCC ”low”

This document contains information that is proprietary to MediaTek Inc.
Unauthorized reproduction or disclosure of this information in whole or in part is strictly prohibited.
MEDIATEK CONFIDENTIAL FOR dengzhenli@far-sightedmobile.com USE ONLY

3.2.5 SIM Data Transfer

There are two transfer modes provided, in software controlled byte by byte fashion or in a block fashion using T=0 controller and DMA controller. In both modes, the time-out counter can be enabled to monitor the elapsed time between two consecutive bytes.

3.2.5.1 Byte Transfer Mode

This mode is used during ATR and PPS procedure. In this mode, the SIM interface only ensures error free character transmission and reception.

Receiving characters

Upon detection of the start-bit sent by SIM card, the interface transforms into reception mode and the following bits are shifted into an internal register. If no parity error is detected or the character-received handshaking is disabled, the received-character will be written into the SIM FIFO and the SIM_COUNT register increased by one. Otherwise, the SIMDATA line will be held "low" at 0.5 etu after detecting the parity error for 1.5 etus, and the character will be re-received. If a character fails to be received correctly for the RXRETRY times, the receive-handshaking will be aborted, the last-received character written into the SIM FIFO, the SIM_COUNT increased by one and the RXERR interrupt generated.

When the number of characters held in the received FIFO exceeds the level defined in the SIM_TIDE register, a RXTIDE interrupt will be generated. The number of characters held in the SIM FIFO can be determined by reading the SIM_COUNT register, and writing to this register will flush the SIM FIFO.

Sending characters

Characters that are to be sent to the card are first written into the SIM FIFO and then automatically transmitted to the card at timed intervals. If character-transmitted handshaking is enabled, the SIMDATA line will be sampled at 1 etu after the parity bit. If the card indicates that it does not receive the character correctly, the character will be re-transmitted for maximum of TXRETRY times before a TXERR interrupt is generated and the transmission is aborted. Otherwise, the succeeding byte in the SIM FIFO will be transmitted.

If a character fails to be transmitted and a TXERR interrupt is generated, the interface will need to be reset by flushing the SIM FIFO before any subsequent transmission or reception operation.

When the number of characters held in the SIM FIFO falls below the level defined in the SIM_TIDE register, a TXTIDE interrupt will be generated. The number of characters held in the SIM FIFO can be determined by reading the SIM_COUNT register, and writing to this register will flush the SIM FIFO.

This document contains information that is proprietary to MediaTek Inc.
Unauthorized reproduction or disclosure of this information in whole or in part is strictly prohibited.
MEDIATEK CONFIDENTIAL FOR dengzhenli@far-sightedmobile.com USE ONLY

3.2.5.2 Block Transfer Mode

Basically the SIM interface is designed to work in conjunction with the T=0 protocol controller and the DMA controller during non-ATR and non-PPS phase, though it is still possible for software to service the data transfer manually as in the byte transfer mode if necessary. Thus the T=0 protocol should be controlled by software.

The T=0 controller can be accessed via four registers representing the instruction header bytes INS and P3, and the procedure bytes SW1 and SW2. The registers are:

- SIM_INS, SIM_P3
- SIM_SW1, SIM_SW2

During the character transfer, SIM_P3 holds the number of characters to be sent or to be received, and SIM_SW1 holds the last received procedure byte including NULL, ACK, NACK and SW1 for debugging.

Data receiving instruction

Data receiving instructions receive data from the SIM card. See the following instantiated procedure.

1. Enable the T=0 protocol controller by setting the T0EN bit to 1 in the SIM_CONF register.
2. Program the SIM_TIDE register to 0x0000 (TXTIDE = 0, RXTIDE = 0).
3. Program the SIM_IRQEN to 0x019C (enable RXERR, TXERR, T0END, TOUT and OVRUN interrupts).
4. Write CLA, INS, P1, P2 and P3 into SIM FIFO.
5. Program the DMA controller:
   - DMA*n*_MSBSRC and DMA*n*_LSBSRC: Address of the SIM_DATA register
   - DMA*n*_MSBDST and DMA*n*_LSBDST: Memory address reserved to store the received characters
   - DMA*n*_COUNT: Identical to P3 or 256 (if P3 = 0)
   - DMA*n*_CON: 0x0078
6. Write P3 into the SIM_P3 register and then INS into SIM_INS register. (Data transfer is initiated now.)
7. Enable the time-out counter by setting the TOUT bit to 1 in the SIM_CONF register.
8. Start the DMA controller by writing 0x8000 into the DMA*n*_START register.

Upon completion of the data receiving instruction, T0END interrupt will be generated and the time-out counter should be disabled by setting the TOUT bit to 0 in the SIM_CONF register.

If error occurs during the data transfer (RXERR, TXERR, OVRUN or TOUT interrupt is generated), the SIM card should be deactivated first and then activate the prior subsequent operations.

Data sending instruction

Data sending instructions send data to the SIM card. See the following instantiated procedure.

This document contains information that is proprietary to MediaTek Inc.
Unauthorized reproduction or disclosure of this information in whole or in part is strictly prohibited.
MEDIATEK CONFIDENTIAL FOR dengzhenli@far-sightedmobile.com USE ONLY

6. Enable the T=0 protocol controller by setting the T0EN bit to 1 in the SIM_CONF register.
7. Program the SIM_TIDE register to 0x0100 (TXTIDE = 1, RXTIDE = 0)
8. Program the SIM_IRQEN to 0x019C (enable RXERR, TXERR, T0END, TOUT and OVRUN interrupts)
9. Write CLA, INS, P1, P2 and P3 into SIM FIFO
10. Program the DMA controller:
    - DMA*n*_MSBSRC and DMA*n*_LSBSRC: Memory address reserved to store the transmitted characters
    - DMA*n*_MSBDST and DMA*n*_LSBDST: Address of the SIM_DATA register
    - DMA*n*_COUNT: Identical to P3
    - DMA*n*_CON: 0x0074
11. Write P3 into the SIM_P3 register and then (0x0100 | INS) into SIM_INS register. (Data transfer is initiated now.)
12. Enable the time-out counter by setting the TOUT bit to 1 in the SIM_CONF register.
13. Start the DMA controller by writing 0x8000 into the DMA*n*_START register.

Upon completion of the data sending instruction, T0END interrupt will be generated and the time-out counter should be disabled by setting the TOUT bit back to 0 in the SIM_CONF register.

If error occurs during the data transfer (RXERR, TXERR, OVRUN or TOUT interrupt is generated), the SIM card should be deactivated first and then activate the prior subsequent operations.

3.3 Keypad Scanner

3.3.1 General Description

The keypad supports two types of keypads: 5*5 double keypad and 5*5 triple keypad.

The 5*5 keypad can be divided into two parts: 1) The keypad interface including 5 columns and 5 rows (see **Figure** 24and **Figure** 25); 2) The key detection block providing key pressed, key released and de-bounce mechanisms.

Each time the key is pressed or released, i.e. something different in the 5*5 matrix, the key detection block senses the change and recognizes if a key has been pressed or released. Whenever the key status changes and is stable, a KEYPAD IRQ will be issued. The MCU can then read the key(s) pressed directly in the KP_MEM1, KP_MEM2, KP_MEM3, KP_MEM4 and KP_MEM5 registers. To ensure the key pressed information is not missed, the status register in keypad is not read-cleared by the APB read command. The status register can only be changed by the key-pressed detection FSM.

This keypad can detect one or two keys pressed simultaneously. **Figure** 27 shows the one key pressed condition. **Figure** 28(a) and **Figure** 28(b) illustrate the two keys pressed cases. Since the key pressed detection depends on the HIGH or LOW level of the external keypad interface, if the keys are pressed at the same time and there exists a key that is on the same column and the same row with other keys, the pressed key cannot be correctly decoded. For example, if there are three key pressed:

This document contains information that is proprietary to MediaTek Inc.
Unauthorized reproduction or disclosure of this information in whole or in part is strictly prohibited.
MEDIATEK CONFIDENTIAL FOR dengzhenli@far-sightedmobile.com USE ONLY

key1 = (x1, y1), key2 = (x2, y2), and key3 = (x1, y2), then both key3 and key4 = (x2, y1) will be detected, and therefore they cannot be distinguished correctly. Hence, the keypad can detect only one or two keys pressed simultaneously at any combination. More than two keys pressed simultaneously in a specific pattern will retrieve the wrong information.

The 5*5 double keypad (**Figure** 24) supports a 5*5*2 = 50 keys matrix. The 50 keys are divided into 25 sub groups and each group consists of 2 keys and a off-chip resistor. 5*5 double keypad has another limitation, which is it cannot detect two keys pressed simultaneously when the two keys are in one group, i.e. the 5*5 keypad cannot detect key0 and key1 pressed simultaneously or key15 and key16 pressed simultaneously.

The 5*5 triple keypad (**Figure** 25) supports a 5*5*3 = 75 keys matrix. The 75 keys are divided into 25 sub groups and each group consists of 3 keys and two off-chip resistors. 5*5 triple keypad has another limitation, which is it cannot detect three keys pressed simultaneously when the three keys are in one group, i.e. 5*5 keypad cannot detect key0, key1 and key2 pressed simultaneously or key15, key16 and key17 pressed simultaneously.

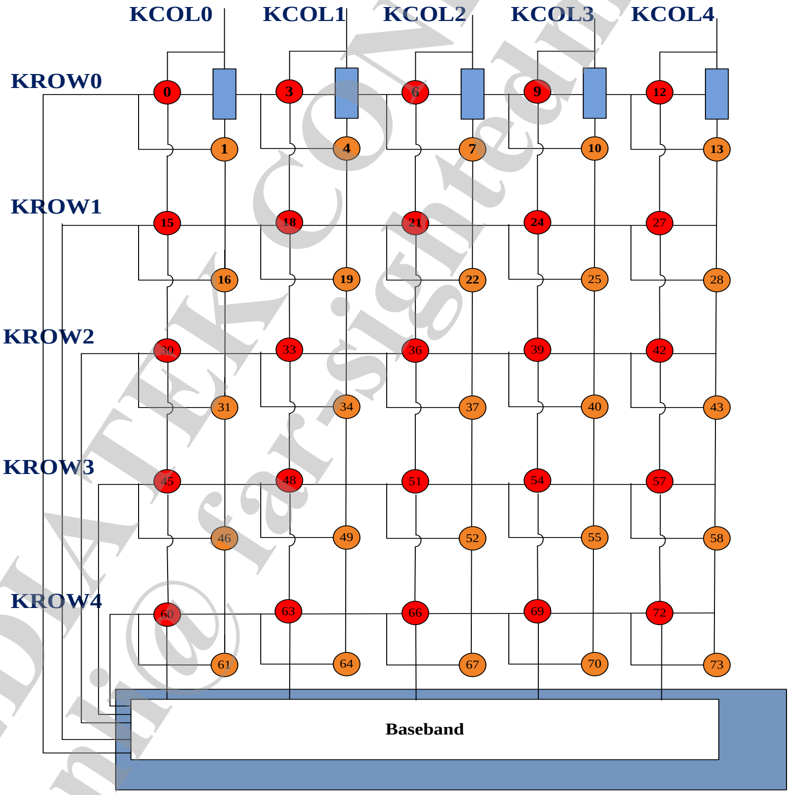

Figure 24. 5x5 double keypad matrix (50 keys)

MEDIATEK CONFIDENTIAL FOR dengzhenli@far-sightedmobile.com USE ONLY

This document contains information that is proprietary to MediaTek Inc.
Unauthorized reproduction or disclosure of this information in whole or in part is strictly prohibited.

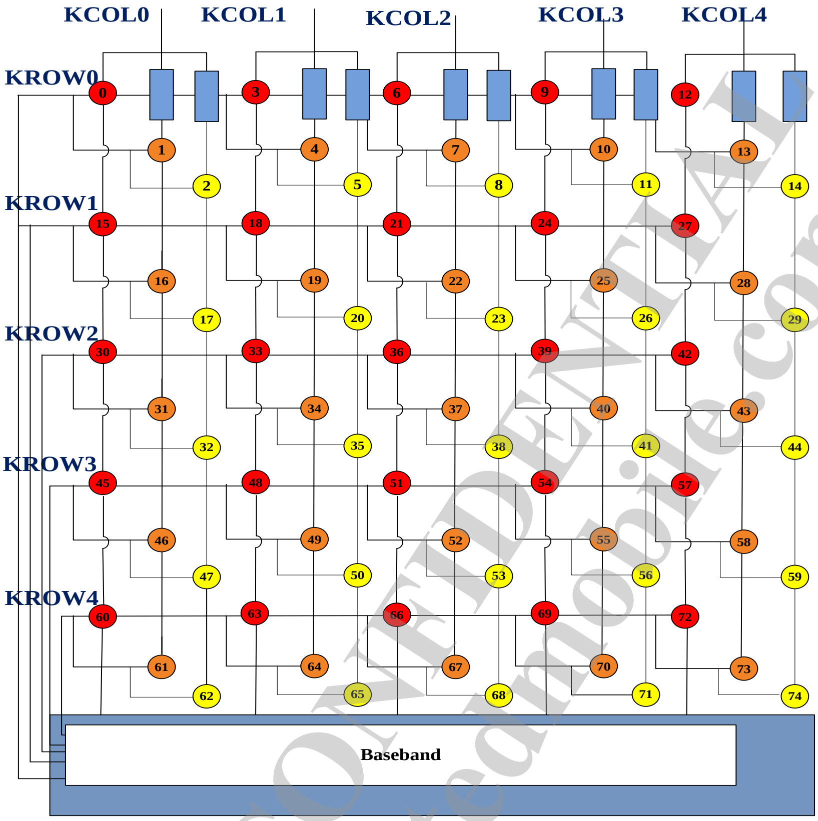

Figure 25. 5x5 triple keypad matrix (75 keys)

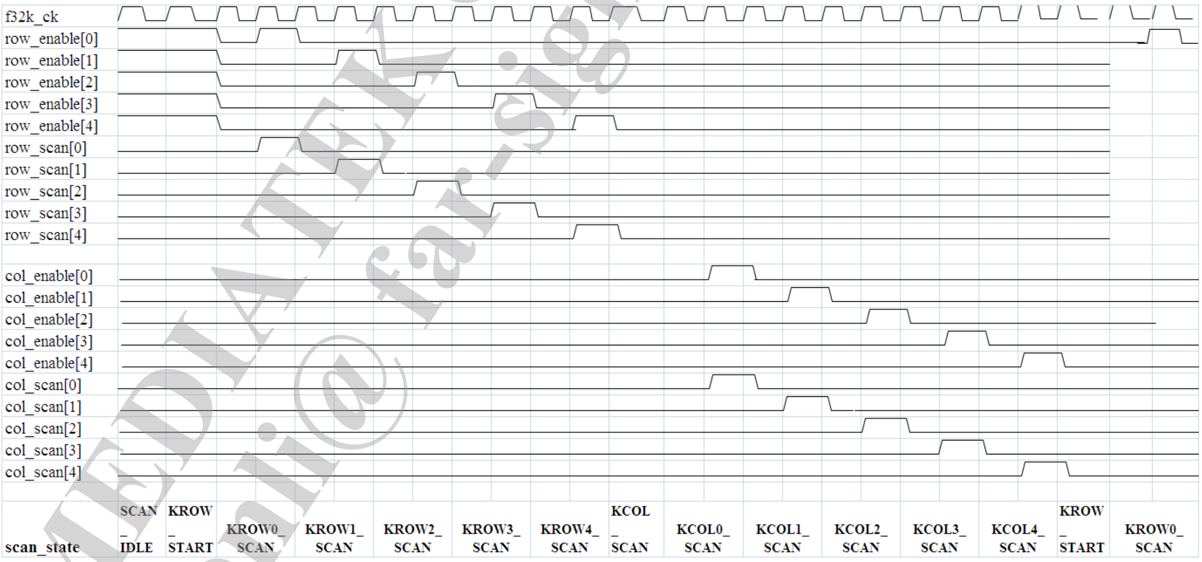

*Figure 26. 5*5 double keypad scan waveform*

MEDIATEK CONFIDENTIAL FOR dengzhenli@ far-sightedmobile.com USE ONLY

This document contains information that is proprietary to MediaTek Inc.
Unauthorized reproduction or disclosure of this information in whole or in part is strictly prohibited.

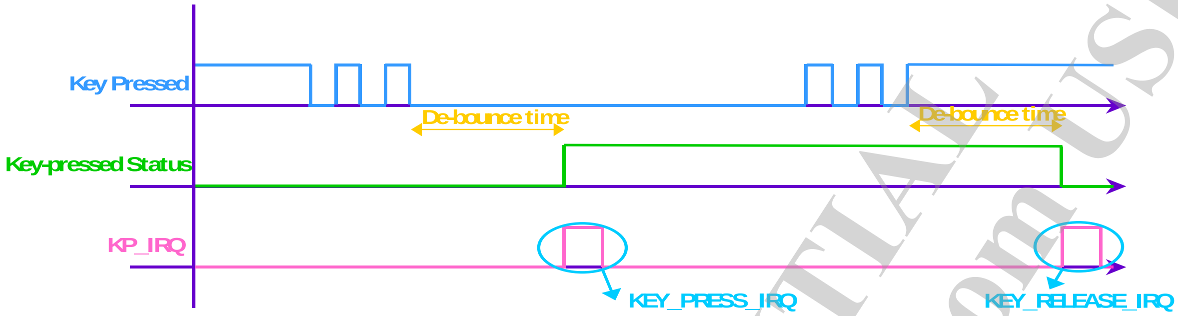

Figure 27. One key pressed with de-bounce mechanism denoted

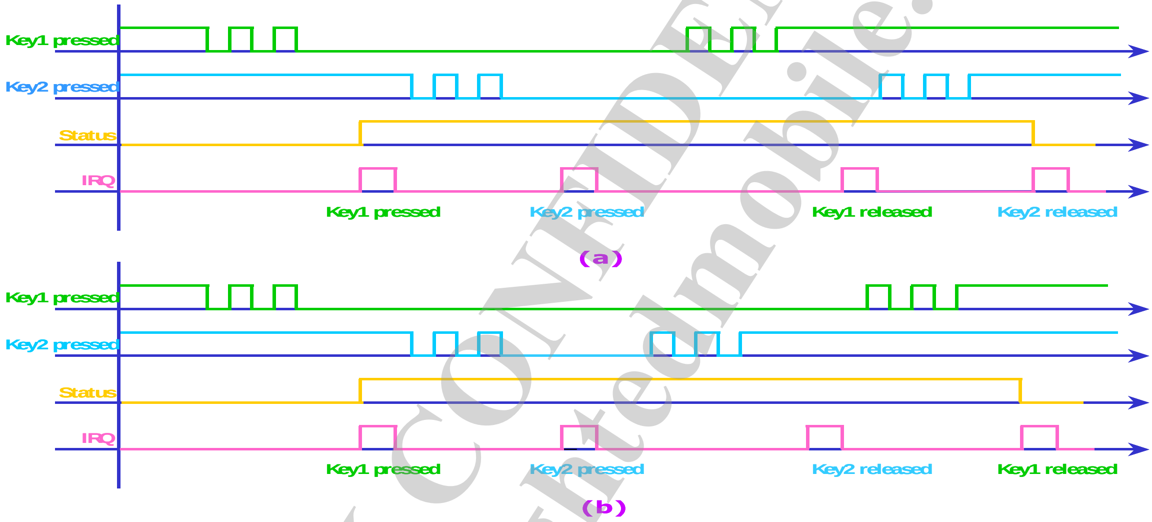

Figure 28. (a) Two keys pressed, case 1; (b) Two keys pressed, case 2

3.3.2 Register Definitions

Module name: KP Base address: (+10002000h)

Address	Name	Width	Register Function
10002000	KP_STA	16	**Keypad Status**
10002004	KP_MEM1	16	**Keypad Scanning Output Register** Shows the key-pressed status of key 0 (LSB) ~ key 15. Refer to Table 1 and Table 2.
10002008	KP_MEM2	16	**Keypad Scanning Output Register** Shows the key-pressed status of key 16 (LSB) ~ key 31. Refer to Table 1 and Table 2.
1000200C	KP_MEM3	16	**Keypad Scanning Output Register** Shows the key-pressed status of key 32 (LSB) ~ key 47. Refer to Table 1 and Table 2.
10002010	KP_MEM4	16	**Keypad Scanning Output Register** Shows the key-pressed status of key 48 (LSB) ~ key 63. Refer to Table 1 and Table 2.
10002014	KP_MEM5	16	**Keypad Scanning Output Register** Shows the key-pressed status of key 64 (LSB) ~ key 77.

This document contains information that is proprietary to MediaTek Inc.
Unauthorized reproduction or disclosure of this information in whole or in part is strictly prohibited.
MEDIATEK CONFIDENTIAL FOR USE ONLY
dengzhenli@far-sightedmobile.com

Address	Name	Width	Register Function
			Refer to Table 1 and Table 2.
10002018	KP_DEBOUNCE	16	**De-bounce Period Setting** Defines the waiting period before key pressing or release events are considered stable. If the de-bounce setting is too small, the keypad will be too sensitive and detect too many unexpected key presses. The suitable de-bounce time setting must be adjusted according to the user's habit.
1000201C	KP_SCAN_TIMING	16	**Keypad Scan Timing Adjustment Register** Sets up the keypad scan timing. *Note: ROW_SCAN_DIV > ROW_INTERVAL_DIV and COL_SCAN_DIV > COL_INTERVAL_DIV. ROW_INTERVAL_DIV/COL_INTERVAL_DIV are used to lower the power consumption for it decreases the actual scan number during the de-bounce time.*
10002020	KP_SEL	16	**Keypad Selection Register** Selects: 1: Use the double keypad or triple keypad 2: Which cols and rows are used
10002024	KP_EN	16	**Keypad Enable Register** Enables/Disables keypad.

10002000 KP_STA Keypad Status 0000

Bit	15	14	13	12	11	10	9	8	7	6	5	4	3	2	1	0
Name																STA
Type																RO
Reset																0

Bit(s)	Mnemonic	Name	Description
0	**STA**	STA	**Indicates the keypad status** The register is not cleared by the read operation. 0: No key pressed 1: Key pressed

10002004 KP_MEM1 Keypad Scanning Output Register FFFF

Bit	15	14	13	12	11	10	9	8	7	6	5	4	3	2	1	0
Name	KEY15	KEY14	KEY13	KEY12	KEY11	KEY10	KEY9	KEY8	KEY7	KEY6	KEY5	KEY4	KEY3	KEY2	KEY1	KEY0
Type	RO	RO	RO	RO	RO	RO	RO	RO	RO	RO	RO	RO	RO	RO	RO	RO
Reset	1	1	1	1	1	1	1	1	1	1	1	1	1	1	1	1

Overview: Shows the key-pressed status of key 0 (LSB) ~ key 15. Refer to Table 1 and Table 2.

Bit(s)	Mnemonic	Name	Description
15	**KEY15**	KEY15	
14	**KEY14**	KEY14	
13	**KEY13**	KEY13	
12	**KEY12**	KEY12	

This document contains information that is proprietary to MediaTek Inc.
Unauthorized reproduction or disclosure of this information in whole or in part is strictly prohibited.
MEDIATEK CONFIDENTIAL FOR dengzhenli@fariSightedmobile.com USE ONLY

Bit(s)	Mnemonic	Name	Description
11	**KEY11**	KEY11	
10	**KEY10**	KEY10	
9	**KEY9**	KEY9	
8	**KEY8**	KEY8	
7	**KEY7**	KEY7	
6	**KEY6**	KEY6	
5	**KEY5**	KEY5	
4	**KEY4**	KEY4	
3	**KEY3**	KEY3	
2	**KEY2**	KEY2	
1	**KEY1**	KEY1	
0	**KEY0**	KEY0	

10002008 KP_MEM2 Keypad Scanning Output Register FFFF

Bit	15	14	13	12	11	10	9	8	7	6	5	4	3	2	1	0
Name	KEY31	KEY30	KEY29	KEY28	KEY27	KEY26	KEY25	KEY24	KEY23	KEY22	KEY21	KEY20	KEY19	KEY18	KEY17	KEY16
Type	RO	RO	RO	RO	RO	RO	RO	RO	RO	RO	RO	RO	RO	RO	RO	RO
Reset	1	1	1	1	1	1	1	1	1	1	1	1	1	1	1	1

Overview: Shows the key-pressed status of key 16 (LSB) ~ key 31. Refer to Table 1 and Table 2.

Bit(s)	Mnemonic	Name	Description
15	**KEY31**	KEY31	
14	**KEY30**	KEY30	
13	**KEY29**	KEY29	
12	**KEY28**	KEY28	
11	**KEY27**	KEY27	
10	**KEY26**	KEY26	
9	**KEY25**	KEY25	
8	**KEY24**	KEY24	
7	**KEY23**	KEY23	
6	**KEY22**	KEY22	
5	**KEY21**	KEY21	
4	**KEY20**	KEY20	
3	**KEY19**	KEY19	
2	**KEY18**	KEY18	
1	**KEY17**	KEY17	
0	**KEY16**	KEY16	

1000200C KP_MEM3 Keypad Scanning Output Register FFFF

Bit	15	14	13	12	11	10	9	8	7	6	5	4	3	2	1	0

This document contains information that is proprietary to MediaTek Inc.
Unauthorized reproduction or disclosure of this information in whole or in part is strictly prohibited.
MEDIATEK CONFIDENTIAL FOR dengzhenli@ far-sightedmobile.com USE ONLY

Name	KEY47	KEY46	KEY45	KEY44	KEY43	KEY42	KEY41	KEY40	KEY39	KEY38	KEY37	KEY36	KEY35	KEY34	KEY33	KEY32
Type	RO	RO	RO	RO	RO	RO	RO	RO	RO	RO	RO	RO	RO	RO	RO	RO
Reset	1	1	1	1	1	1	1	1	1	1	1	1	1	1	1	1

Overview: Shows the key-pressed status of key 32 (LSB) ~ key 47. Refer to Table 1 and Table 2.

Bit(s)	Mnemonic	Name	Description
15	**KEY47**	KEY47	
14	**KEY46**	KEY46	
13	**KEY45**	KEY45	
12	**KEY44**	KEY44	
11	**KEY43**	KEY43	
10	**KEY42**	KEY42	
9	**KEY41**	KEY41	
8	**KEY40**	KEY40	
7	**KEY39**	KEY39	
6	**KEY38**	KEY38	
5	**KEY37**	KEY37	
4	**KEY36**	KEY36	
3	**KEY35**	KEY35	
2	**KEY34**	KEY34	
1	**KEY33**	KEY33	
0	**KEY32**	KEY32	

10002010 KP_MEM4 Keypad Scanning Output Register FFFF

Bit	15	14	13	12	11	10	9	8	7	6	5	4	3	2	1	0
Name	KEY63	KEY62	KEY61	KEY60	KEY59	KEY58	KEY57	KEY56	KEY55	KEY54	KEY53	KEY52	KEY51	KEY50	KEY49	KEY48
Type	RO	RO	RO	RO	RO	RO	RO	RO	RO	RO	RO	RO	RO	RO	RO	RO
Reset	1	1	1	1	1	1	1	1	1	1	1	1	1	1	1	1

Overview: Shows the key-pressed status of key 48 (LSB) ~ key 63. Refer to Table 1 and Table 2.

Bit(s)	Mnemonic	Name	Description
15	**KEY63**	KEY63	
14	**KEY62**	KEY62	
13	**KEY61**	KEY61	
12	**KEY60**	KEY60	
11	**KEY59**	KEY59	
10	**KEY58**	KEY58	
9	**KEY57**	KEY57	
8	**KEY56**	KEY56	
7	**KEY55**	KEY55	
6	**KEY54**	KEY54	
5	**KEY53**	KEY53	

This document contains information that is proprietary to MediaTek Inc.
Unauthorized reproduction or disclosure of this information in whole or in part is strictly prohibited.
MEDIATEK CONFIDENTIAL FOR denghuili@ fartsightedmobile.com USE ONLY

Bit(s)	Mnemonic	Name	Description
4	**KEY52**	KEY52	
3	**KEY51**	KEY51	
2	**KEY50**	KEY50	
1	**KEY49**	KEY49	
0	**KEY48**	KEY48	

10002014 KP_MEM5 Keypad Scanning Output Register 07FF

Bit	15	14	13	12	11	10	9	8	7	6	5	4	3	2	1	0
Name						KEY74	KEY73	KEY72	KEY71	KEY70	KEY69	KEY68	KEY67	KEY66	KEY65	KEY64
Type						RO	RO	RO	RO	RO	RO	RO	RO	RO	RO	RO
Reset						1	1	1	1	1	1	1	1	1	1	1

Overview: Shows the key-pressed status of key 64 (LSB) ~ key 77. Refer to Table 1 and Table 2.

Bit(s)	Mnemonic	Name	Description
10	**KEY74**	KEY74	
9	**KEY73**	KEY73	
8	**KEY72**	KEY72	
7	**KEY71**	KEY71	
6	**KEY70**	KEY70	
5	**KEY69**	KEY69	
4	**KEY68**	KEY68	
3	**KEY67**	KEY67	
2	**KEY66**	KEY66	
1	**KEY65**	KEY65	
0	**KEY64**	KEY64	

The five registers list the status of 75 keys on the keypad. For 5*5 keypad, KP_MEM1~4 registers list the status of 75 keys on the keypad. When the MCU receives KEYPAD IRQ, both two registers must be read. If any key is pressed, the relative bit will be set to 0.

In order to work normally, the corresponding pull-up/down setting must be programmed correctly. If some keys can be used because their COL or ROW is used as GPIO, these corresponding enabling bit should be set.
KEYS Status list of the 75 keys.

10002018 KP_DEBOUNCE De-bounce Period Setting 0400

Bit	15	14	13	12	11	10	9	8	7	6	5	4	3	2	1	0
Name			DEBOUNCE													
Type			RW													
Reset			0	0	0	1	0	0	0	0	0	0	0	0	0	0

Overview: Defines the waiting period before key pressing or release events are considered stable. If the de-bounce setting is too small, the keypad will be too sensitive and detect too many unexpected key presses. The suitable de-bounce time setting must be adjusted according to the user's habit.

MEDIATEK CONFIDENTIAL FOR dengzhenli@far-sightedmobile.com USE ONLY

This document contains information that is proprietary to MediaTek Inc.
Unauthorized reproduction or disclosure of this information in whole or in part is strictly prohibited.

Bit(s)	Mnemonic	Name	Description
13:0	**DEBOUNCE**	DEBOUNCE	De-bounce time = KP_DEBOUNCE/32ms.

1000201C [KP_SCAN_TIMING] **Keypad Scan Timing Adjustment Register** **0011**

Bit	15	14	13	12	11	10	9	8	7	6	5	4	3	2	1	0
Name	**COL_INTERVAL_DIV**				**ROW_INTERVAL_DIV**				**COL_SCAN_DIV**				**ROW_SCAN_DIV**			
Type	RW				RW				RW				RW			
Reset	0	0	0	0	0	0	0	0	0	0	0	1	0	0	0	1

Overview: Sets up the keypad scan timing. Note: ROW_SCAN_DIV > ROW_INTERVAL_DIV and COL_SCAN_DIV > COL_INTERVAL_DIV. ROW_INTERVAL_DIV/COL_INTERVAL_DIV are used to lower the power consumption for it decreases the actual scan number during the de-bounce time.

Bit(s)	Mnemonic	Name	Description
15:12	**COL_INTERVAL_DIV**	COL_INTERVAL_DIV	**Sets up the COL SCAN interval cycle, i.e. cycles between two scans** Default 0 means there is 1 cycle between two high scan pulses.
11:8	**ROW_INTERVAL_DIV**	ROW_INTERVAL_DIV	**Sets up the ROW SCAN interval cycle, i.e. cycles between two scans** Default 0 means there is 1 cycle between two high scan pulses.
7:4	**COL_SCAN_DIV**	COL_SCAN_DIV	**Sets up the COL SCAN cycle which includes COL_INTERVAL_DIV and the high pulse period** Default 1 means there are 2 cycles for each scan, including 1 cycle high pulse and 1 cycle interval.
3:0	**ROW_SCAN_DIV**	ROW_SCAN_DIV	**Sets up the ROW SCAN cycle which includes ROW_INTERVAL_DIV and the high pulse period** Default 1 means there are 2 cycles for each scan, including 1 cycle high pulse and 1 cycle interval.

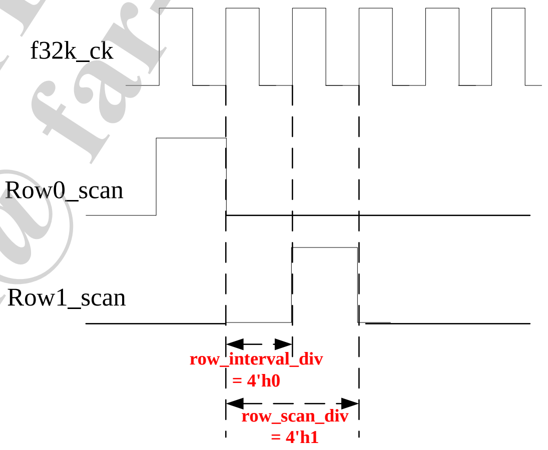

Figure 29. kp timing register

MEDIATEK CONFIDENTIAL FOR dengzhenli@ far-sightedmobile.com USE ONLY

This document contains information that is proprietary to MediaTek Inc.
Unauthorized reproduction or disclosure of this information in whole or in part is strictly prohibited.

10002020 **KP_SEL** **Keypad Selection Register** **FFC0**

Bit	15	14	13	12	11	10	9	8	7	6	5	4	3	2	1	0
Name	KP1_COL_SEL										SAMPLE_DELAY					KP_SEL
Type	RW										RW					RW
Reset	1	1	1	1	1						0	0	0	0	0	0

Overview: Selects 1: Use the double keypad or triple keypad; 2: Which cols and rows are used.

Bit(s)	Mnemonic	Name	Description
15:11	**KP1_COL_SEL**	KP1_COL_SEL	**Selects to use which col** 0: Disable corresponding column 1: Enable corresponding column
5:1	**SAMPLE_DELAY**	SAMPLE_DELAY	**Sets up delay cycles to sample col** 0: No delay n: n*31.25ns delay to sample col
0	**KP_SEL**	KP_SEL	**Selects to use double keypad or triple keypad** 0: Use triple keypad 1: Use double keypad

10002024 **KP_EN** **Keypad Enable Register** **0001**

Bit	15	14	13	12	11	10	9	8	7	6	5	4	3	2	1	0
Name																KP_EN
Type																RW
Reset																1

Overview: Enables/Disables keypad.

Bit(s)	Mnemonic	Name	Description
0	**KP_EN**	KP_EN	0: Disable keypad (Both double and triple keypads will not work.) 1: Enable keypad (Only either of double or triple keypads can work.)

***Table 44*. 5*5 double KEY's order number in COL/ROW matrix**

	COL0	COL1	COL2	COL3	COL4
ROW4	60/61	63/64	66/67	69/70	72/73
ROW3	45/46	48/49	51/52	54/55	57/58
ROW2	30/31	33/34	36/37	39/40	42/43
ROW1	15/16	18/19	21/22	24/25	27/28
ROW0	0/1	3/4	6/7	9/10	12/13

***Table 45*. 5*5 triple KEY's order number in COL/ROW matrix**

	COL0	COL1	COL2	COL3	COL4
ROW4	60/61/62	63/64/65	66/67/68	69/70/71	72/73/74

This document contains information that is proprietary to MediaTek Inc.
Unauthorized reproduction or disclosure of this information in whole or in part is strictly prohibited.
MEDIATEK CONFIDENTIAL FOR dengzhenli@far-sightedmobile.com USE ONLY

ROW3	45/46/47	48/49/50	51/52/53	54/55/56	57/58/59
ROW2	30/31/32	33/34/35	36/37/38	39/40/41	42/43/44
ROW1	15/16/17	18/19/20	21/22/23	24/25/26	27/28/29
ROW0	0/1/2	3/4/5	6/7/8	9/10/11	12/13/14

3.4 General Purpose Inputs/Outputs

3.4.1 General Description

MT6261A offers 56 general purpose I/O pins. By setting up the control registers, the MCU software can control the direction, the output value, and read the input values on these pins. These GPIOs and GPOs are multiplexed with other functions to reduce the pin count. In addition, all GPO pins are removed. To facilitate application use, the software can configure which clock to send outside the chip. There are 6 clock-out ports embedded in 56 GPIO pins, and each clock-out can be programmed to output appropriate clock source. Besides, when 2 GPIO function for the same peripheral IP, the smaller GPIO serial numbers have higher priority than larger numbers.

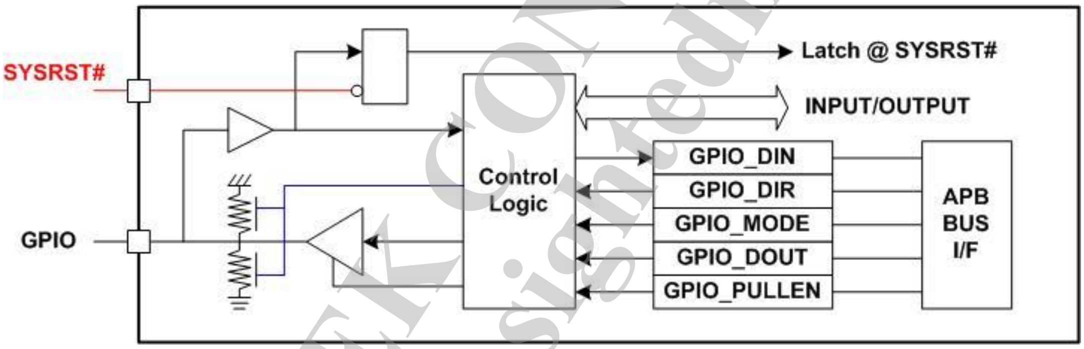

Figure 30. GPIO block diagram

3.4.2 Register Definitions

Module name: gpio_reg Base address: (+A0020000h)

Address	Name	Width	Register Function
A0020000	GPIO_DIR0	32	**GPIO Direction Control** Configures GPIO direction
A0020004	GPIO_DIR0_SET	32	**GPIO Direction Control** For bitwise access of GPIO_DIR0
A0020008	GPIO_DIR0_CLR	32	**GPIO Direction Control** For bitwise access of GPIO_DIR0
A0020010	GPIO_DIR1	32	**GPIO Direction Control** Configures GPIO direction
A0020014	GPIO_DIR1_SET	32	**GPIO Direction Control** For bitwise access of GPIO_DIR1
A0020018	GPIO_DIR1_CLR	32	**GPIO Direction Control** For bitwise access of GPIO_DIR1
A0020100	GPIO_PULLEN0	32	**GPIO Pull-up/down Enable Control** Configures GPIO pull enabling

This document contains information that is proprietary to MediaTek Inc.
Unauthorized reproduction or disclosure of this information in whole or in part is strictly prohibited.

Address	Name	Width	Register Function
A0020104	GPIO_PULLEN0_SET	32	**GPIO Pull-up/down Enable Control** For bitwise access of GPIO_PULLEN0
A0020108	GPIO_PULLEN0_CLR	32	**GPIO Pull-up/down Enable Control** For bitwise access of GPIO_PULLEN0
A0020110	GPIO_PULLEN1	32	**GPIO Pull-up/down Enable Control** Configures GPIO pull enabling
A0020114	GPIO_PULLEN1_SET	32	**GPIO Pull-up/down Enable Control** For bitwise access of GPIO_PULLEN1
A0020118	GPIO_PULLEN1_CLR	32	**GPIO Pull-up/down Enable Control** For bitwise access of GPIO_PULLEN1
A0020200	GPIO_DINV0	32	**GPIO Data Inversion Control** Configures GPIO inversion enabling
A0020204	GPIO_DINV0_SET	32	**GPIO Data Inversion Control** For bitwise access of GPIO_DINV0
A0020208	GPIO_DINV0_CLR	32	**GPIO Data Inversion Control** For bitwise access of GPIO_DINV0
A0020210	GPIO_DINV1	32	**GPIO Data Inversion Control** Configures GPIO inversion enabling
A0020214	GPIO_DINV1_SET	32	**GPIO Data Inversion Control** For bitwise access of GPIO_DINV1
A0020218	GPIO_DINV1_CLR	32	**GPIO Data Inversion Control** For bitwise access of GPIO_DINV1
A0020300	GPIO_DOUT0	32	**GPIO Output Data Control** Configures GPIO output value
A0020304	GPIO_DOUT0_SET	32	**GPIO Output Data Control** For bitwise access of GPIO_DIR0
A0020308	GPIO_DOUT0_CLR	32	**GPIO Output Data Control** For bitwise access of GPIO_DIR0
A0020310	GPIO_DOUT1	32	**GPIO Output Data Control** Configures GPIO output value
A0020314	GPIO_DOUT1_SET	32	**GPIO Output Data Control** For bitwise access of GPIO_DIR1
A0020318	GPIO_DOUT1_CLR	32	**GPIO Output Data Control** For bitwise access of GPIO_DIR1
A0020400	GPIO_DIN0	32	**GPIO Input Data Value** Reads GPIO input value
A0020410	GPIO_DIN1	32	**GPIO Input Data Value** Reads GPIO input value
A0020500	GPIO_PULLSEL0	32	**GPIO Pullsel Control** Configures GPIO PUPD selection
A0020504	GPIO_PULLSEL0_SET	32	**GPIO Pullsel Control** For bitwise access of GPIO_PULLSEL0
A0020508	GPIO_PULLSEL0_CLR	32	**GPIO Pullsel Control** For bitwise access of GPIO_PULLSEL0
A0020510	GPIO_PULLSEL1	32	**GPIO Pullsel Control** Configures GPIO PUPD selection
A0020514	GPIO_PULLSEL1_SET	32	**GPIO Pullsel Control** For bitwise access of GPIO_PULLSEL1
A0020518	GPIO_PULLSEL1_CLR	32	**GPIO Pullsel Control** For bitwise access of GPIO_PULLSEL1
A0020600	GPIO_SMT0	32	**GPIO SMT Control**

This document contains information that is proprietary to MediaTek Inc.
Unauthorized reproduction or disclosure of this information in whole or in part is strictly prohibited.
MEDIATEK CONFIDENTIAL FOR dengzhenai@ fair-sighted-mobile.com USE ONLY

Address	Name	Width	Register Function
			Configures GPIO Schmit trigger control
A0020604	GPIO_SMT0_SET	32	**GPIO SMT Control** For bitwise access of GPIO_SMT0
A0020608	GPIO_SMT0_CLR	32	**GPIO SMT Control** For bitwise access of GPIO_SMT0
A0020610	GPIO_SMT1	32	**GPIO SMT Control** Configures GPIO Schmit trigger control
A0020614	GPIO_SMT1_SET	32	**GPIO SMT Control** For bitwise access of GPIO_SMT1
A0020618	GPIO_SMT1_CLR	32	**GPIO SMT Control** For bitwise access of GPIO_SMT1
A0020700	GPIO_SR0	32	**GPIO SR Control** Configures GPIO slew rate control
A0020704	GPIO_SR0_SET	32	**GPIO SR Control** For bitwise access of GPIO_SR0
A0020708	GPIO_SR0_CLR	32	**GPIO SR Control** For bitwise access of GPIO_SR0
A0020710	GPIO_SR1	32	**GPIO SR Control** Configures GPIO slew rate control
A0020714	GPIO_SR1_SET	32	**GPIO SR Control** For bitwise access of GPIO_SR1
A0020718	GPIO_SR1_CLR	32	**GPIO SR Control** For bitwise access of GPIO_SR1
A0020720	GPIO_SIM_SR	32	**GPIO SIM SR Control** Configures GPIO slew rate control for SIM IO
A0020724	GPIO_SIM_SR_SET	32	**GPIO SIM SR Control** For bitwise access of GPIO_SIM_SR
A0020728	GPIO_SIM_SR_CLR	32	**GPIO SIM SR Control** For bitwise access of GPIO_SIM_SR
A0020800	GPIO_DRV0	32	**GPIO DRV Control** Configures GPIO driving control
A0020804	GPIO_DRV0_SET	32	**GPIO DRV Control** For bitwise access of GPIO_DRV0
A0020808	GPIO_DRV0_CLR	32	**GPIO DRV Control** For bitwise access of GPIO_DRV0
A0020810	GPIO_DRV1	32	**GPIO DRV Control** Configures GPIO driving control
A0020814	GPIO_DRV1_SET	32	**GPIO DRV Control** For bitwise access of GPIO_DRV1
A0020818	GPIO_DRV1_CLR	32	**GPIO DRV Control** For bitwise access of GPIO_DRV1
A0020900	GPIO_IES0	32	**GPIO IES Control** Configures GPIO input enabling control
A0020904	GPIO_IES0_SET	32	**GPIO IES Control** For bitwise access of GPIO_IES0
A0020908	GPIO_IES0_CLR	32	**GPIO IES Control** For bitwise access of GPIO_IES0
A0020910	GPIO_IES1	32	**GPIO IES Control** Configures GPIO input enabling control
A0020914	GPIO_IES1_SET	32	**GPIO IES Control** For bitwise access of GPIO_IES1

This document contains information that is proprietary to MediaTek Inc.
Unauthorized reproduction or disclosure of this information in whole or in part is strictly prohibited.
MEDIATEK CONFIDENTIAL FOR dengzhenli@ far-sightedmobile.com USE ONLY

Address	Name	Width	Register Function
A0020918	GPIO_IES1_CLR	32	**GPIO IES Control** For bitwise access of GPIO_IES1
A0020A00	GPIO_PUPD0	32	**GPIO PUPD Control** Configures GPIO PUPD control
A0020A04	GPIO_PUPD0_SET	32	**GPIO PUPD Control** For bitwise access of GPIO_PUPD0
A0020A08	GPIO_PUPD0_CLR	32	**GPIO PUPD Control** For bitwise access of GPIO_PUPD0
A0020A10	GPIO_PUPD1	32	**GPIO PUPD Control** Configures GPIO PUPD control
A0020A14	GPIO_PUPD1_SET	32	**GPIO PUPD Control** For bitwise access of GPIO_PUPD1
A0020A18	GPIO_PUPD1_CLR	32	**GPIO PUPD Control** For bitwise access of GPIO_PUPD1
A0020B00	GPIO_RESEN0_0	32	**GPIO R0 Control** Configures GPIO R0 control
A0020B04	GPIO_RESEN0_0_SET	32	**GPIO R0 Control** For bitwise access of GPIO_RESEN0_0
A0020B08	GPIO_RESEN0_0_CLR	32	**GPIO R0 Control** For bitwise access of GPIO_RESEN0_0
A0020B10	GPIO_RESEN0_1	32	**GPIO R0 Control** Configures GPIO R0 control
A0020B14	GPIO_RESEN0_1_SET	32	**GPIO R0 Control** For bitwise access of GPIO_RESEN0_1
A0020B18	GPIO_RESEN0_1_CLR	32	**GPIO R0 Control** For bitwise access of GPIO_RESEN0_1
A0020B20	GPIO_RESEN1_0	32	**GPIO R1 Control** Configures GPIO R1 control
A0020B24	GPIO_RESEN1_0_SET	32	**GPIO R1 Control** For bitwise access of GPIO_RESEN1_0
A0020B28	GPIO_RESEN1_0_CLR	32	**GPIO R1 Control** For bitwise access of GPIO_RESEN1_0
A0020B30	GPIO_RESEN1_1	32	**GPIO R1 Control** Configures GPIO R1 control
A0020B34	GPIO_RESEN1_1_SET	32	**GPIO R1 Control** For bitwise access of GPIO_RESEN1_1
A0020B38	GPIO_RESEN1_1_CLR	32	**GPIO R1 Control** For bitwise access of GPIO_RESEN1_1
A0020C00	GPIO_MODE0	32	**GPIO Mode Control** Configures GPIO aux. mode
A0020C04	GPIO_MODE0_SET	32	**GPIO Mode Control** For bitwise access of GPIO_MODE0
A0020C08	GPIO_MODE0_CLR	32	**GPIO Mode Control** For bitwise access of GPIO_MODE0
A0020C10	GPIO_MODE1	32	**GPIO Mode Control** Configures GPIO aux. mode
A0020C14	GPIO_MODE1_SET	32	**GPIO Mode Control** For bitwise access of GPIO_MODE1
A0020C18	GPIO_MODE1_CLR	32	**GPIO Mode Control** For bitwise access of GPIO_MODE1
A0020C20	GPIO_MODE2	32	**GPIO Mode Control**

This document contains information that is proprietary to MediaTek Inc.
Unauthorized reproduction or disclosure of this information in whole or in part is strictly prohibited.
MEDIATEK CONFIDENTIAL FOR denghenian@far-sightedmobile.com USE ONLY

Address	Name	Width	Register Function
			Configures GPIO aux. mode
A0020C24	GPIO_MODE2_SET	32	**GPIO Mode Control** For bitwise access of GPIO_MODE2
A0020C28	GPIO_MODE2_CLR	32	**GPIO Mode Control** For bitwise access of GPIO_MODE2
A0020C30	GPIO_MODE3	32	**GPIO Mode Control** Configures GPIO aux. mode
A0020C34	GPIO_MODE3_SET	32	**GPIO Mode Control** For bitwise access of GPIO_MODE3
A0020C38	GPIO_MODE3_CLR	32	**GPIO Mode Control** For bitwise access of GPIO_MODE3
A0020C40	GPIO_MODE4	32	**GPIO Mode Control** Configures GPIO aux. mode
A0020C44	GPIO_MODE4_SET	32	**GPIO Mode Control** For bitwise access of GPIO_MODE4
A0020C48	GPIO_MODE4_CLR	32	**GPIO Mode Control** For bitwise access of GPIO_MODE4
A0020C50	GPIO_MODE5	32	**GPIO Mode Control** Configures GPIO aux. mode
A0020C54	GPIO_MODE5_SET	32	**GPIO Mode Control** For bitwise access of GPIO_MODE5
A0020C58	GPIO_MODE5_CLR	32	**GPIO Mode Control** For bitwise access of GPIO_MODE5
A0020C60	GPIO_MODE6	32	**GPIO Mode Control** Configures GPIO aux. mode
A0020C64	GPIO_MODE6_SET	32	**GPIO Mode Control** For bitwise access of GPIO_MODE6
A0020C68	GPIO_MODE6_CLR	32	**GPIO Mode Control** For bitwise access of GPIO_MODE6
A0020D10	GPIO_TDSEL	32	**GPIO TDSEL Control** GPIO TX duty control register
A0020D14	GPIO_TDSEL_SET	32	**GPIO TDSEL Control** For bitwise access of GPIO_TDSEL
A0020D18	GPIO_TDSEL_CLR	32	**GPIO TDSEL Control** For bitwise access of GPIO_TDSEL
A0020E00	CLK_OUT0	32	**CLK Out Selection Control** CLK OUT0 Setting
A0020E10	CLK_OUT1	32	**CLK Out Selection Control** CLK OUT1 Setting
A0020E20	CLK_OUT2	32	**CLK Out Selection Control** CLK OUT2 Setting
A0020E30	CLK_OUT3	32	**CLK Out Selection Control** CLK OUT3 Setting
A0020E40	CLK_OUT4	32	**CLK Out Selection Control** CLK OUT4 Setting
A0020E50	CLK_OUT5	32	**CLK Out Selection Control** CLK OUT5 Setting

A0020000 GPIO_DIR0 GPIO Direction Control 040008E0

This document contains information that is proprietary to MediaTek Inc.
Unauthorized reproduction or disclosure of this information in whole or in part is strictly prohibited.

FOR dengzhenli@far-sightedmobile.com USE ONLY
MEDIATEK CONFIDENTIAL

Bit	31	30	29	28	27	26	25	24	23	22	21	20	19	18	17	16
Mne	**GPIO31**	**GPIO30**	**GPIO29**	**GPIO28**	**GPIO27**	**GPIO26**	**GPIO25**	**GPIO24**	**GPIO23**	**GPIO22**	**GPIO21**	**GPIO20**	**GPIO19**	**GPIO18**	**GPIO17**	**GPIO16**
Type	RW	RW	RW	RW	RW	RW	RW	RW	RW	RW	RW	RW	RW	RW	RW	RW
Reset	0	0	0	0	0	1	0	0	0	0	0	0	0	0	0	0
Bit	15	14	13	12	11	10	9	8	7	6	5	4	3	2	1	0
Mne	**GPIO15**	**GPIO14**	**GPIO13**	**GPIO12**	**GPIO11**	**GPIO10**	**GPIO9**	**GPIO8**	**GPIO7**	**GPIO6**	**GPIO5**	**GPIO4**	**GPIO3**	**GPIO2**	**GPIO1**	**GPIO0**
Type	RW	RW	RW	RW	RW	RW	RW	RW	RW	RW	RW	RW	RW	RW	RW	RW
Reset	0	0	0	0	1	0	0	0	1	1	1	0	0	0	0	0

Overview: Configures GPIO direction

Bit(s)	Mnemonic	Name	Description
31	**GPIO31**	GPIO31_DIR	**GPIO31 direction control** 0: GPIO as input 1: GPIO as output
30	**GPIO30**	GPIO30_DIR	**GPIO30 direction control** 0: GPIO as input 1: GPIO as output
29	**GPIO29**	GPIO29_DIR	**GPIO29 direction control** 0: GPIO as input 1: GPIO as output
28	**GPIO28**	GPIO28_DIR	**GPIO28 direction control** 0: GPIO as input 1: GPIO as output
27	**GPIO27**	GPIO27_DIR	**GPIO27 direction control** 0: GPIO as input 1: GPIO as output
26	**GPIO26**	GPIO26_DIR	**GPIO26 direction control** 0: GPIO as input 1: GPIO as output
25	**GPIO25**	GPIO25_DIR	**GPIO25 direction control** 0: GPIO as input 1: GPIO as output
24	**GPIO24**	GPIO24_DIR	**GPIO24 direction control** 0: GPIO as input 1: GPIO as output
23	**GPIO23**	GPIO23_DIR	**GPIO23 direction control** 0: GPIO as input 1: GPIO as output
22	**GPIO22**	GPIO22_DIR	**GPIO22 direction control** 0: GPIO as input 1: GPIO as output
21	**GPIO21**	GPIO21_DIR	**GPIO21 direction control** 0: GPIO as input 1: GPIO as output
20	**GPIO20**	GPIO20_DIR	**GPIO20 direction control** 0: GPIO as input 1: GPIO as output
19	**GPIO19**	GPIO19_DIR	**GPIO19 direction control** 0: GPIO as input 1: GPIO as output
18	**GPIO18**	GPIO18_DIR	**GPIO18 direction control**

MEDIATEK CONFIDENTIAL FOR dengzhenli@farsightedmobile.com USE ONLY

This document contains information that is proprietary to MediaTek Inc.
Unauthorized reproduction or disclosure of this information in whole or in part is strictly prohibited.

Bit(s)	Mnemonic	Name	Description
			0: GPIO as input 1: GPIO as output
17	**GPIO17**	GPIO17_DIR	**GPIO17 direction control** 0: GPIO as input 1: GPIO as output
16	**GPIO16**	GPIO16_DIR	**GPIO16 direction control** 0: GPIO as input 1: GPIO as output
15	**GPIO15**	GPIO15_DIR	**GPIO15 direction control** 0: GPIO as input 1: GPIO as output
14	**GPIO14**	GPIO14_DIR	**GPIO14 direction control** 0: GPIO as input 1: GPIO as output
13	**GPIO13**	GPIO13_DIR	**GPIO13 direction control** 0: GPIO as input 1: GPIO as output
12	**GPIO12**	GPIO12_DIR	**GPIO12 direction control** 0: GPIO as input 1: GPIO as output
11	**GPIO11**	GPIO11_DIR	**GPIO11 direction control** 0: GPIO as input 1: GPIO as output
10	**GPIO10**	GPIO10_DIR	**GPIO10 direction control** 0: GPIO as input 1: GPIO as output
9	**GPIO9**	GPIO9_DIR	**GPIO9 direction control** 0: GPIO as input 1: GPIO as output
8	**GPIO8**	GPIO8_DIR	**GPIO8 direction control** 0: GPIO as input 1: GPIO as output
7	**GPIO7**	GPIO7_DIR	**GPIO7 direction control** 0: GPIO as input 1: GPIO as output
6	**GPIO6**	GPIO6_DIR	**GPIO6 direction control** 0: GPIO as input 1: GPIO as output
5	**GPIO5**	GPIO5_DIR	**GPIO5 direction control** 0: GPIO as input 1: GPIO as output
4	**GPIO4**	GPIO4_DIR	**GPIO4 direction control** 0: GPIO as input 1: GPIO as output
3	**GPIO3**	GPIO3_DIR	**GPIO3 direction control** 0: GPIO as input 1: GPIO as output
2	**GPIO2**	GPIO2_DIR	**GPIO2 direction control** 0: GPIO as input 1: GPIO as output
1	**GPIO1**	GPIO1_DIR	**GPIO1 direction control** 0: GPIO as input

This document contains information that is proprietary to MediaTek Inc.
Unauthorized reproduction or disclosure of this information in whole or in part is strictly prohibited.
MEDIATEK CONFIDENTIAL FOR dengzhenli@ fan-sightedmobile.com USE ONLY

Bit(s)	Mnemonic	Name	Description
			1: GPIO as output
0	**GPIO0**	GPIO0_DIR	**GPIO0 direction control** 0: GPIO as input 1: GPIO as output

A0020004 **GPIO_DIR0_SET** **GPIO Direction Control** **00000000**

Bit	31	30	29	28	27	26	25	24	23	22	21	20	19	18	17	16
Mne	GPIO31	GPIO30	GPIO29	GPIO28	GPIO27	GPIO26	GPIO25	GPIO24	GPIO23	GPIO22	GPIO21	GPIO20	GPIO19	GPIO18	GPIO17	GPIO16
Type	WO	WO	WO	WO	WO	WO	WO	WO	WO	WO	WO	WO	WO	WO	WO	WO
Reset	0	0	0	0	0	0	0	0	0	0	0	0	0	0	0	0
Bit	15	14	13	12	11	10	9	8	7	6	5	4	3	2	1	0
Mne	GPIO15	GPIO14	GPIO13	GPIO12	GPIO11	GPIO10	GPIO9	GPIO8	GPIO7	GPIO6	GPIO5	GPIO4	GPIO3	GPIO2	GPIO1	GPIO0
Type	WO	WO	WO	WO	WO	WO	WO	WO	WO	WO	WO	WO	WO	WO	WO	WO
Reset	0	0	0	0	0	0	0	0	0	0	0	0	0	0	0	0

Overview: For bitwise access of GPIO_DIR0

Bit(s)	Mnemonic	Name	Description
31	**GPIO31**	GPIO31_DIR	**Bitwise SET operation of GPIO31 direction** 0: Keep 1: SET bits
30	**GPIO30**	GPIO30_DIR	**Bitwise SET operation of GPIO30 direction** 0: Keep 1: SET bits
29	**GPIO29**	GPIO29_DIR	**Bitwise SET operation of GPIO29 direction** 0: Keep 1: SET bits
28	**GPIO28**	GPIO28_DIR	**Bitwise SET operation of GPIO28 direction** 0: Keep 1: SET bits
27	**GPIO27**	GPIO27_DIR	**Bitwise SET operation of GPIO27 direction** 0: Keep 1: SET bits
26	**GPIO26**	GPIO26_DIR	**Bitwise SET operation of GPIO26 direction** 0: Keep 1: SET bits
25	**GPIO25**	GPIO25_DIR	**Bitwise SET operation of GPIO25 direction** 0: Keep 1: SET bits
24	**GPIO24**	GPIO24_DIR	**Bitwise SET operation of GPIO24 direction** 0: Keep 1: SET bits
23	**GPIO23**	GPIO23_DIR	**Bitwise SET operation of GPIO23 direction** 0: Keep 1: SET bits
22	**GPIO22**	GPIO22_DIR	**Bitwise SET operation of GPIO22 direction** 0: Keep 1: SET bits

This document contains information that is proprietary to MediaTek Inc.
Unauthorized reproduction or disclosure of this information in whole or in part is strictly prohibited.

Bit(s)	Mnemonic	Name	Description
21	**GPIO21**	GPIO21_DIR	**Bitwise SET operation of GPIO21 direction** 0: Keep 1: SET bits
20	**GPIO20**	GPIO20_DIR	**Bitwise SET operation of GPIO20 direction** 0: Keep 1: SET bits
19	**GPIO19**	GPIO19_DIR	**Bitwise SET operation of GPIO19 direction** 0: Keep 1: SET bits
18	**GPIO18**	GPIO18_DIR	**Bitwise SET operation of GPIO18 direction** 0: Keep 1: SET bits
17	**GPIO17**	GPIO17_DIR	**Bitwise SET operation of GPIO17 direction** 0: Keep 1: SET bits
16	**GPIO16**	GPIO16_DIR	**Bitwise SET operation of GPIO16 direction** 0: Keep 1: SET bits
15	**GPIO15**	GPIO15_DIR	**Bitwise SET operation of GPIO15 direction** 0: Keep 1: SET bits
14	**GPIO14**	GPIO14_DIR	**Bitwise SET operation of GPIO14 direction** 0: Keep 1: SET bits
13	**GPIO13**	GPIO13_DIR	**Bitwise SET operation of GPIO13 direction** 0: Keep 1: SET bits
12	**GPIO12**	GPIO12_DIR	**Bitwise SET operation of GPIO12 direction** 0: Keep 1: SET bits
11	**GPIO11**	GPIO11_DIR	**Bitwise SET operation of GPIO11 direction** 0: Keep 1: SET bits
10	**GPIO10**	GPIO10_DIR	**Bitwise SET operation of GPIO10 direction** 0: Keep 1: SET bits
9	**GPIO9**	GPIO9_DIR	**Bitwise SET operation of GPIO9 direction** 0: Keep 1: SET bits
8	**GPIO8**	GPIO8_DIR	**Bitwise SET operation of GPIO8 direction** 0: Keep 1: SET bits
7	**GPIO7**	GPIO7_DIR	**Bitwise SET operation of GPIO7 direction** 0: Keep 1: SET bits
6	**GPIO6**	GPIO6_DIR	**Bitwise SET operation of GPIO6 direction** 0: Keep 1: SET bits
5	**GPIO5**	GPIO5_DIR	**Bitwise SET operation of GPIO5 direction** 0: Keep 1: SET bits
4	**GPIO4**	GPIO4_DIR	**Bitwise SET operation of GPIO4 direction**

This document contains information that is proprietary to MediaTek Inc.
Unauthorized reproduction or disclosure of this information in whole or in part is strictly prohibited.
MEDIATEK CONFIDENTIAL FOR dengzhenli@ farsightedmobile.com USE ONLY

Bit(s)	Mnemonic	Name	Description
			0: Keep 1: SET bits
3	**GPIO3**	GPIO3_DIR	**Bitwise SET operation of GPIO3 direction** 0: Keep 1: SET bits
2	**GPIO2**	GPIO2_DIR	**Bitwise SET operation of GPIO2 direction** 0: Keep 1: SET bits
1	**GPIO1**	GPIO1_DIR	**Bitwise SET operation of GPIO1 direction** 0: Keep 1: SET bits
0	**GPIO0**	GPIO0_DIR	**Bitwise SET operation of GPIO0 direction** 0: Keep 1: SET bits

A0020008 **GPIO_DIR0_CLR** **GPIO Direction Control** **00000000**

Bit	31	30	29	28	27	26	25	24	23	22	21	20	19	18	17	16
Mne	**GPIO31**	**GPIO30**	**GPIO29**	**GPIO28**	**GPIO27**	**GPIO26**	**GPIO25**	**GPIO24**	**GPIO23**	**GPIO22**	**GPIO21**	**GPIO20**	**GPIO19**	**GPIO18**	**GPIO17**	**GPIO16**
Type	WO	WO	WO	WO	WO	WO	WO	WO	WO	WO	WO	WO	WO	WO	WO	WO
Reset	0	0	0	0	0	0	0	0	0	0	0	0	0	0	0	0
Bit	15	14	13	12	11	10	9	8	7	6	5	4	3	2	1	0
Mne	**GPIO15**	**GPIO14**	**GPIO13**	**GPIO12**	**GPIO11**	**GPIO10**	**GPIO9**	**GPIO8**	**GPIO7**	**GPIO6**	**GPIO5**	**GPIO4**	**GPIO3**	**GPIO2**	**GPIO1**	**GPIO0**
Type	WO	WO	WO	WO	WO	WO	WO	WO	WO	WO	WO	WO	WO	WO	WO	WO
Reset	0	0	0	0	0	0	0	0	0	0	0	0	0	0	0	0

Overview: For bitwise access of GPIO_DIR0

Bit(s)	Mnemonic	Name	Description
31	**GPIO31**	GPIO31_DIR	**Bitwise CLR operation of GPIO31 direction** 0: Keep 1: CLR bits
30	**GPIO30**	GPIO30_DIR	**Bitwise CLR operation of GPIO30 direction** 0: Keep 1: CLR bits
29	**GPIO29**	GPIO29_DIR	**Bitwise CLR operation of GPIO29 direction** 0: Keep 1: CLR bits
28	**GPIO28**	GPIO28_DIR	**Bitwise CLR operation of GPIO28 direction** 0: Keep 1: CLR bits
27	**GPIO27**	GPIO27_DIR	**Bitwise CLR operation of GPIO27 direction** 0: Keep 1: CLR bits
26	**GPIO26**	GPIO26_DIR	**Bitwise CLR operation of GPIO26 direction** 0: Keep 1: CLR bits
25	**GPIO25**	GPIO25_DIR	**Bitwise CLR operation of GPIO25 direction** 0: Keep

This document contains information that is proprietary to MediaTek Inc.
Unauthorized reproduction or disclosure of this information in whole or in part is strictly prohibited.

Bit(s)	Mnemonic	Name	Description
			1: CLR bits
24	**GPIO24**	GPIO24_DIR	**Bitwise CLR operation of GPIO24 direction** 0: Keep 1: CLR bits
23	**GPIO23**	GPIO23_DIR	**Bitwise CLR operation of GPIO23 direction** 0: Keep 1: CLR bits
22	**GPIO22**	GPIO22_DIR	**Bitwise CLR operation of GPIO22 direction** 0: Keep 1: CLR bits
21	**GPIO21**	GPIO21_DIR	**Bitwise CLR operation of GPIO21 direction** 0: Keep 1: CLR bits
20	**GPIO20**	GPIO20_DIR	**Bitwise CLR operation of GPIO20 direction** 0: Keep 1: CLR bits
19	**GPIO19**	GPIO19_DIR	**Bitwise CLR operation of GPIO19 direction** 0: Keep 1: CLR bits
18	**GPIO18**	GPIO18_DIR	**Bitwise CLR operation of GPIO18 direction** 0: Keep 1: CLR bits
17	**GPIO17**	GPIO17_DIR	**Bitwise CLR operation of GPIO17 direction** 0: Keep 1: CLR bits
16	**GPIO16**	GPIO16_DIR	**Bitwise CLR operation of GPIO16 direction** 0: Keep 1: CLR bits
15	**GPIO15**	GPIO15_DIR	**Bitwise CLR operation of GPIO15 direction** 0: Keep 1: CLR bits
14	**GPIO14**	GPIO14_DIR	**Bitwise CLR operation of GPIO14 direction** 0: Keep 1: CLR bits
13	**GPIO13**	GPIO13_DIR	**Bitwise CLR operation of GPIO13 direction** 0: Keep 1: CLR bits
12	**GPIO12**	GPIO12_DIR	**Bitwise CLR operation of GPIO12 direction** 0: Keep 1: CLR bits
11	**GPIO11**	GPIO11_DIR	**Bitwise CLR operation of GPIO11 direction** 0: Keep 1: CLR bits
10	**GPIO10**	GPIO10_DIR	**Bitwise CLR operation of GPIO10 direction** 0: Keep 1: CLR bits
9	**GPIO9**	GPIO9_DIR	**Bitwise CLR operation of GPIO9 direction** 0: Keep 1: CLR bits
8	**GPIO8**	GPIO8_DIR	**Bitwise CLR operation of GPIO8 direction** 0: Keep 1: CLR bits

This document contains information that is proprietary to MediaTek Inc.
Unauthorized reproduction or disclosure of this information in whole or in part is strictly prohibited.
MEDIATEK CONFIDENTIAL FOR dengzhenli@ fartightedmobile.com USE ONLY

Bit(s)	Mnemonic	Name	Description
7	**GPIO7**	GPIO7_DIR	**Bitwise CLR operation of GPIO7 direction** 0: Keep 1: CLR bits
6	**GPIO6**	GPIO6_DIR	**Bitwise CLR operation of GPIO6 direction** 0: Keep 1: CLR bits
5	**GPIO5**	GPIO5_DIR	**Bitwise CLR operation of GPIO5 direction** 0: Keep 1: CLR bits
4	**GPIO4**	GPIO4_DIR	**Bitwise CLR operation of GPIO4 direction** 0: Keep 1: CLR bits
3	**GPIO3**	GPIO3_DIR	**Bitwise CLR operation of GPIO3 direction** 0: Keep 1: CLR bits
2	**GPIO2**	GPIO2_DIR	**Bitwise CLR operation of GPIO2 direction** 0: Keep 1: CLR bits
1	**GPIO1**	GPIO1_DIR	**Bitwise CLR operation of GPIO1 direction** 0: Keep 1: CLR bits
0	**GPIO0**	GPIO0_DIR	**Bitwise CLR operation of GPIO0 direction** 0: Keep 1: CLR bits

A0020010 **GPIO_DIR1** **GPIO Direction Control** **00004000**

Bit	31	30	29	28	27	26	25	24	23	22	21	20	19	18	17	16
Name									**GPIO55**	**GPIO54**			**GPIO51**	**GPIO50**	**GPIO49**	**GPIO48**
Type									RW	RW			RW	RW	RW	RW
Reset									0	0			0	0	0	0
Bit	15	14	13	12	11	10	9	8	7	6	5	4	3	2	1	0
Name	**GPIO47**	**GPIO46**	**GPIO45**	**GPIO44**	**GPIO43**	**GPIO42**	**GPIO41**	**GPIO40**	**GPIO39**	**GPIO38**	**GPIO37**	**GPIO36**	**GPIO35**	**GPIO34**	**GPIO33**	**GPIO32**
Type	RW	RW	RW	RW	RW	RW	RW	RW	RW	RW	RW	RW	RW	RW	RW	RW
Reset	0	1	0	0	0	0	0	0	0	0	0	0	0	0	0	0

Overview: Configures GPIO direction

Bit(s)	Mnemonic	Name	Description
23	**GPIO55**	GPIO55_DIR	**GPIO55 direction control** 0: GPIO as input 1: GPIO as output
22	**GPIO54**	GPIO54_DIR	**GPIO54 direction control** 0: GPIO as input 1: GPIO as output
19	**GPIO51**	GPIO51_DIR	**GPIO51 direction control** 0: GPIO as input 1: GPIO as output
18	**GPIO50**	GPIO50_DIR	**GPIO50 direction control** 0: GPIO as input

MEDIATEK CONFIDENTIAL
FOR dengzhenli@fly-sightedmobile.com USE ONLY

This document contains information that is proprietary to MediaTek Inc.
Unauthorized reproduction or disclosure of this information in whole or in part is strictly prohibited.

Bit(s)	Mnemonic	Name	Description
			1: GPIO as output
17	**GPIO49**	GPIO49_DIR	**GPIO49 direction control** 0: GPIO as input 1: GPIO as output
16	**GPIO48**	GPIO48_DIR	**GPIO48 direction control** 0: GPIO as input 1: GPIO as output
15	**GPIO47**	GPIO47_DIR	**GPIO47 direction control** 0: GPIO as input 1: GPIO as output
14	**GPIO46**	GPIO46_DIR	**GPIO46 direction control** 0: GPIO as input 1: GPIO as output
13	**GPIO45**	GPIO45_DIR	**GPIO45 direction control** 0: GPIO as input 1: GPIO as output
12	**GPIO44**	GPIO44_DIR	**GPIO44 direction control** 0: GPIO as input 1: GPIO as output
11	**GPIO43**	GPIO43_DIR	**GPIO43 direction control** 0: GPIO as input 1: GPIO as output
10	**GPIO42**	GPIO42_DIR	**GPIO42 direction control** 0: GPIO as input 1: GPIO as output
9	**GPIO41**	GPIO41_DIR	**GPIO41 direction control** 0: GPIO as input 1: GPIO as output
8	**GPIO40**	GPIO40_DIR	**GPIO40 direction control** 0: GPIO as input 1: GPIO as output
7	**GPIO39**	GPIO39_DIR	**GPIO39 direction control** 0: GPIO as input 1: GPIO as output
6	**GPIO38**	GPIO38_DIR	**GPIO38 direction control** 0: GPIO as input 1: GPIO as output
5	**GPIO37**	GPIO37_DIR	**GPIO37 direction control** 0: GPIO as input 1: GPIO as output
4	**GPIO36**	GPIO36_DIR	**GPIO36 direction control** 0: GPIO as input 1: GPIO as output
3	**GPIO35**	GPIO35_DIR	**GPIO35 direction control** 0: GPIO as input 1: GPIO as output
2	**GPIO34**	GPIO34_DIR	**GPIO34 direction control** 0: GPIO as input 1: GPIO as output
1	**GPIO33**	GPIO33_DIR	**GPIO33 direction control** 0: GPIO as input 1: GPIO as output

This document contains information that is proprietary to MediaTek Inc.
Unauthorized reproduction or disclosure of this information in whole or in part is strictly prohibited.
MEDIATEK CONFIDENTIAL FOR dengzhenli@ fartimedmobile.com USE ONLY

Bit(s)	Mnemonic	Name	Description
0	**GPIO32**	GPIO32_DIR	**GPIO32 direction control** 0: GPIO as input 1: GPIO as output

A0020014 **GPIO_DIR1_SET** **GPIO Direction Control** **00000000**

Bit	31	30	29	28	27	26	25	24	23	22	21	20	19	18	17	16
Name									**GPIO55**	**GPIO54**			**GPIO51**	**GPIO50**	**GPIO49**	**GPIO48**
Type									WO	WO			WO	WO	WO	WO
Reset									0	0			0	0	0	0
Bit	15	14	13	12	11	10	9	8	7	6	5	4	3	2	1	0
Name	**GPIO47**	**GPIO46**	**GPIO45**	**GPIO44**	**GPIO43**	**GPIO42**	**GPIO41**	**GPIO40**	**GPIO39**	**GPIO38**	**GPIO37**	**GPIO36**	**GPIO35**	**GPIO34**	**GPIO33**	**GPIO32**
Type	WO	WO	WO	WO	WO	WO	WO	WO	WO	WO	WO	WO	WO	WO	WO	WO
Reset	0	0	0	0	0	0	0	0	0	0	0	0	0	0	0	0

Overview: For bitwise access of GPIO_DIR1

Bit(s)	Mnemonic	Name	Description
23	**GPIO55**	GPIO55_DIR	**Bitwise SET operation of GPIO55 direction** 0: Keep 1: SET bits
22	**GPIO54**	GPIO54_DIR	**Bitwise SET operation of GPIO54 direction** 0: Keep 1: SET bits
19	**GPIO51**	GPIO51_DIR	**Bitwise SET operation of GPIO51 direction** 0: Keep 1: SET bits
18	**GPIO50**	GPIO50_DIR	**Bitwise SET operation of GPIO50 direction** 0: Keep 1: SET bits
17	**GPIO49**	GPIO49_DIR	**Bitwise SET operation of GPIO49 direction** 0: Keep 1: SET bits
16	**GPIO48**	GPIO48_DIR	**Bitwise SET operation of GPIO48 direction** 0: Keep 1: SET bits
15	**GPIO47**	GPIO47_DIR	**Bitwise SET operation of GPIO47 direction** 0: Keep 1: SET bits
14	**GPIO46**	GPIO46_DIR	**Bitwise SET operation of GPIO46 direction** 0: Keep 1: SET bits
13	**GPIO45**	GPIO45_DIR	**Bitwise SET operation of GPIO45 direction** 0: Keep 1: SET bits
12	**GPIO44**	GPIO44_DIR	**Bitwise SET operation of GPIO44 direction** 0: Keep 1: SET bits
11	**GPIO43**	GPIO43_DIR	**Bitwise SET operation of GPIO43 direction**

This document contains information that is proprietary to MediaTek Inc.
Unauthorized reproduction or disclosure of this information in whole or in part is strictly prohibited.

Bit(s)	Mnemonic	Name	Description
			0: Keep 1: SET bits
10	**GPIO42**	GPIO42_DIR	**Bitwise SET operation of GPIO42 direction** 0: Keep 1: SET bits
9	**GPIO41**	GPIO41_DIR	**Bitwise SET operation of GPIO41 direction** 0: Keep 1: SET bits
8	**GPIO40**	GPIO40_DIR	**Bitwise SET operation of GPIO40 direction** 0: Keep 1: SET bits
7	**GPIO39**	GPIO39_DIR	**Bitwise SET operation of GPIO39 direction** 0: Keep 1: SET bits
6	**GPIO38**	GPIO38_DIR	**Bitwise SET operation of GPIO38 direction** 0: Keep 1: SET bits
5	**GPIO37**	GPIO37_DIR	**Bitwise SET operation of GPIO37 direction** 0: Keep 1: SET bits
4	**GPIO36**	GPIO36_DIR	**Bitwise SET operation of GPIO36 direction** 0: Keep 1: SET bits
3	**GPIO35**	GPIO35_DIR	**Bitwise SET operation of GPIO35 direction** 0: Keep 1: SET bits
2	**GPIO34**	GPIO34_DIR	**Bitwise SET operation of GPIO34 direction** 0: Keep 1: SET bits
1	**GPIO33**	GPIO33_DIR	**Bitwise SET operation of GPIO33 direction** 0: Keep 1: SET bits
0	**GPIO32**	GPIO32_DIR	**Bitwise SET operation of GPIO32 direction** 0: Keep 1: SET bits

A0020018 **GPIO_DIR1_CLR** **GPIO Direction Control** **00000000**

Bit	31	30	29	28	27	26	25	24	23	22	21	20	19	18	17	16
Name									**GPIO55**	**GPIO54**			**GPIO51**	**GPIO50**	**GPIO49**	**GPIO48**
Type									WO	WO			WO	WO	WO	WO
Reset									0	0			0	0	0	0
Bit	15	14	13	12	11	10	9	8	7	6	5	4	3	2	1	0
Name	**GPIO47**	**GPIO46**	**GPIO45**	**GPIO44**	**GPIO43**	**GPIO42**	**GPIO41**	**GPIO40**	**GPIO39**	**GPIO38**	**GPIO37**	**GPIO36**	**GPIO35**	**GPIO34**	**GPIO33**	**GPIO32**
Type	WO	WO	WO	WO	WO	WO	WO	WO	WO	WO	WO	WO	WO	WO	WO	WO
Reset	0	0	0	0	0	0	0	0	0	0	0	0	0	0	0	0

Overview: For bitwise access of GPIO_DIR1

This document contains information that is proprietary to MediaTek Inc.
Unauthorized reproduction or disclosure of this information in whole or in part is strictly prohibited.

Bit(s)	Mnemonic	Name	Description
23	**GPIO55**	GPIO55_DIR	**Bitwise CLR operation of GPIO55 direction** 0: Keep 1: CLR bits
22	**GPIO54**	GPIO54_DIR	**Bitwise CLR operation of GPIO54 direction** 0: Keep 1: CLR bits
19	**GPIO51**	GPIO51_DIR	**Bitwise CLR operation of GPIO51 direction** 0: Keep 1: CLR bits
18	**GPIO50**	GPIO50_DIR	**Bitwise CLR operation of GPIO50 direction** 0: Keep 1: CLR bits
17	**GPIO49**	GPIO49_DIR	**Bitwise CLR operation of GPIO49 direction** 0: Keep 1: CLR bits
16	**GPIO48**	GPIO48_DIR	**Bitwise CLR operation of GPIO48 direction** 0: Keep 1: CLR bits
15	**GPIO47**	GPIO47_DIR	**Bitwise CLR operation of GPIO47 direction** 0: Keep 1: CLR bits
14	**GPIO46**	GPIO46_DIR	**Bitwise CLR operation of GPIO46 direction** 0: Keep 1: CLR bits
13	**GPIO45**	GPIO45_DIR	**Bitwise CLR operation of GPIO45 direction** 0: Keep 1: CLR bits
12	**GPIO44**	GPIO44_DIR	**Bitwise CLR operation of GPIO44 direction** 0: Keep 1: CLR bits
11	**GPIO43**	GPIO43_DIR	**Bitwise CLR operation of GPIO43 direction** 0: Keep 1: CLR bits
10	**GPIO42**	GPIO42_DIR	**Bitwise CLR operation of GPIO42 direction** 0: Keep 1: CLR bits
9	**GPIO41**	GPIO41_DIR	**Bitwise CLR operation of GPIO41 direction** 0: Keep 1: CLR bits
8	**GPIO40**	GPIO40_DIR	**Bitwise CLR operation of GPIO40 direction** 0: Keep 1: CLR bits
7	**GPIO39**	GPIO39_DIR	**Bitwise CLR operation of GPIO39 direction** 0: Keep 1: CLR bits
6	**GPIO38**	GPIO38_DIR	**Bitwise CLR operation of GPIO38 direction** 0: Keep 1: CLR bits
5	**GPIO37**	GPIO37_DIR	**Bitwise CLR operation of GPIO37 direction** 0: Keep 1: CLR bits
4	**GPIO36**	GPIO36_DIR	**Bitwise CLR operation of GPIO36 direction**

MEDIATEK CONFIDENTIAL FOR dengzhenli@farsightedmobile.com USE ONLY

This document contains information that is proprietary to MediaTek Inc.
Unauthorized reproduction or disclosure of this information in whole or in part is strictly prohibited.

Bit(s)	Mnemonic	Name	Description
			0: Keep 1: CLR bits
3	**GPIO35**	GPIO35_DIR	**Bitwise CLR operation of GPIO35 direction** 0: Keep 1: CLR bits
2	**GPIO34**	GPIO34_DIR	**Bitwise CLR operation of GPIO34 direction** 0: Keep 1: CLR bits
1	**GPIO33**	GPIO33_DIR	**Bitwise CLR operation of GPIO33 direction** 0: Keep 1: CLR bits
0	**GPIO32**	GPIO32_DIR	**Bitwise CLR operation of GPIO32 direction** 0: Keep 1: CLR bits

A0020100 **GPIO_PULLEN0 GPIO Pull-up/down Enable Control** **43C00BFF**

Bit	31	30	29	28	27	26	25	24	23	22	21	20	19	18	17	16
Name		**GPIO30**					**GPIO25**	**GPIO24**	**GPIO23**	**GPIO22**						
Type		RW					RW	RW	RW	RW						
Reset		1					1	1	1	1						
Bit	15	14	13	12	11	10	9	8	7	6	5	4	3	2	1	0
Name					**GPIO11**		**GPIO9**	**GPIO8**	**GPIO7**	**GPIO6**	**GPIO5**	**GPIO4**	**GPIO3**	**GPIO2**	**GPIO1**	**GPIO0**
Type					RW		RW	RW	RW	RW	RW	RW	RW	RW	RW	RW
Reset					1		1	1	1	1	1	1	1	1	1	1

Overview: Configures GPIO pull enabling

Bit(s)	Mnemonic	Name	Description
30	**GPIO30**	GPIO30_PULLEN	**GPIO30 PULLEN** 0: Disable 1: Enable
25	**GPIO25**	GPIO25_PULLEN	**GPIO25 PULLEN** 0: Disable 1: Enable
24	**GPIO24**	GPIO24_PULLEN	**GPIO24 PULLEN** 0: Disable 1: Enable
23	**GPIO23**	GPIO23_PULLEN	**GPIO23 PULLEN** 0: Disable 1: Enable
22	**GPIO22**	GPIO22_PULLEN	**GPIO22 PULLEN** 0: Disable 1: Enable
11	**GPIO11**	GPIO11_PULLEN	**GPIO11 PULLEN** 0: Disable 1: Enable
9	**GPIO9**	GPIO9_PULLEN	**GPIO9 PULLEN** 0: Disable 1: Enable

This document contains information that is proprietary to MediaTek Inc.
Unauthorized reproduction or disclosure of this information in whole or in part is strictly prohibited.

Bit(s)	Mnemonic	Name	Description
8	**GPIO8**	GPIO8_PULLEN	**GPIO8 PULLEN** 0: Disable 1: Enable
7	**GPIO7**	GPIO7_PULLEN	**GPIO7 PULLEN** 0: Disable 1: Enable
6	**GPIO6**	GPIO6_PULLEN	**GPIO6 PULLEN** 0: Disable 1: Enable
5	**GPIO5**	GPIO5_PULLEN	**GPIO5 PULLEN** 0: Disable 1: Enable
4	**GPIO4**	GPIO4_PULLEN	**GPIO4 PULLEN** 0: Disable 1: Enable
3	**GPIO3**	GPIO3_PULLEN	**GPIO3 PULLEN** 0: Disable 1: Enable
2	**GPIO2**	GPIO2_PULLEN	**GPIO2 PULLEN** 0: Disable 1: Enable
1	**GPIO1**	GPIO1_PULLEN	**GPIO1 PULLEN** 0: Disable 1: Enable
0	**GPIO0**	GPIO0_PULLEN	**GPIO0 PULLEN** 0: Disable 1: Enable

A0020104 **GPIO_PULLEN0_SET** **GPIO Pull-up/down Enable Control** **00000000**

Bit	31	30	29	28	27	26	25	24	23	22	21	20	19	18	17	16
Name		**GPIO30**					**GPIO25**	**GPIO24**	**GPIO23**	**GPIO22**						
Type		WO					WO	WO	WO	WO						
Reset		0					0	0	0	0						
Bit	15	14	13	12	11	10	9	8	7	6	5	4	3	2	1	0
Name					**GPIO11**		**GPIO9**	**GPIO8**	**GPIO7**	**GPIO6**	**GPIO5**	**GPIO4**	**GPIO3**	**GPIO2**	**GPIO1**	**GPIO0**
Type					WO		WO	WO	WO	WO	WO	WO	WO	WO	WO	WO
Reset					0		0	0	0	0	0	0	0	0	0	0

Overview: For bitwise access of GPIO_PULLEN0

Bit(s)	Mnemonic	Name	Description
30	**GPIO30**	GPIO30_PULLEN	**Bitwise SET operation of GPIO30 PULLEN_SET** 0: Keep 1: SET bits
25	**GPIO25**	GPIO25_PULLEN	**Bitwise SET operation of GPIO25 PULLEN_SET** 0: Keep 1: SET bits
24	**GPIO24**	GPIO24_PULLEN	**Bitwise SET operation of GPIO24 PULLEN_SET**

This document contains information that is proprietary to MediaTek Inc.
Unauthorized reproduction or disclosure of this information in whole or in part is strictly prohibited.
MEDIATEK CONFIDENTIAL FOR dengzhenli@far-sightedmobile.com USE ONLY

Bit(s)	Mnemonic	Name	Description
			0: Keep 1: SET bits
23	**GPIO23**	GPIO23_PULLEN	**Bitwise SET operation of GPIO23 PULLEN_SET** 0: Keep 1: SET bits
22	**GPIO22**	GPIO22_PULLEN	**Bitwise SET operation of GPIO22 PULLEN_SET** 0: Keep 1: SET bits
11	**GPIO11**	GPIO11_PULLEN	**Bitwise SET operation of GPIO11 PULLEN_SET** 0: Keep 1: SET bits
9	**GPIO9**	GPIO9_PULLEN	**Bitwise SET operation of GPIO9 PULLEN_SET** 0: Keep 1: SET bits
8	**GPIO8**	GPIO8_PULLEN	**Bitwise SET operation of GPIO8 PULLEN_SET** 0: Keep 1: SET bits
7	**GPIO7**	GPIO7_PULLEN	**Bitwise SET operation of GPIO7 PULLEN_SET** 0: Keep 1: SET bits
6	**GPIO6**	GPIO6_PULLEN	**Bitwise SET operation of GPIO6 PULLEN_SET** 0: Keep 1: SET bits
5	**GPIO5**	GPIO5_PULLEN	**Bitwise SET operation of GPIO5 PULLEN_SET** 0: Keep 1: SET bits
4	**GPIO4**	GPIO4_PULLEN	**Bitwise SET operation of GPIO4 PULLEN_SET** 0: Keep 1: SET bits
3	**GPIO3**	GPIO3_PULLEN	**Bitwise SET operation of GPIO3 PULLEN_SET** 0: Keep 1: SET bits
2	**GPIO2**	GPIO2_PULLEN	**Bitwise SET operation of GPIO2 PULLEN_SET** 0: Keep 1: SET bits
1	**GPIO1**	GPIO1_PULLEN	**Bitwise SET operation of GPIO1 PULLEN_SET** 0: Keep 1: SET bits
0	**GPIO0**	GPIO0_PULLEN	**Bitwise SET operation of GPIO0 PULLEN_SET** 0: Keep 1: SET bits

A0020108 **GPIO_PULLEN0_CLR** **GPIO Pull-up/down Enable Control** **00000000**

Bit	31	30	29	28	27	26	25	24	23	22	21	20	19	18	17	16
Name		GPIO30					GPIO25	GPIO24	GPIO23	GPIO22						
Type		WO					WO	WO	WO	WO						
Reset		0					0	0	0	0						
Bit	15	14	13	12	11	10	9	8	7	6	5	4	3	2	1	0
Name					GPIO11		GPIO9	GPIO8	GPIO7	GPIO6	GPIO5	GPIO4	GPIO3	GPIO2	GPIO1	GPIO0

MEDIATEK CONFIDENTIAL FOR dengzhenli@fair-lightedmobile.com USE ONLY

This document contains information that is proprietary to MediaTek Inc.
Unauthorized reproduction or disclosure of this information in whole or in part is strictly prohibited.

					1											
Type					WO		WO	WO	WO	WO	WO	WO	WO	WO	WO	WO
Reset					0		0	0	0	0	0	0	0	0	0	0

Overview: For bitwise access of GPIO_PULLEN0

Bit(s)	Mnemonic	Name	Description
30	**GPIO30**	GPIO30_PULLEN	**Bitwise CLR operation of GPIO30 PULLEN_CLR** 0: Keep 1: CLR bits
25	**GPIO25**	GPIO25_PULLEN	**Bitwise CLR operation of GPIO25 PULLEN_CLR** 0: Keep 1: CLR bits
24	**GPIO24**	GPIO24_PULLEN	**Bitwise CLR operation of GPIO24 PULLEN_CLR** 0: Keep 1: CLR bits
23	**GPIO23**	GPIO23_PULLEN	**Bitwise CLR operation of GPIO23 PULLEN_CLR** 0: Keep 1: CLR bits
22	**GPIO22**	GPIO22_PULLEN	**Bitwise CLR operation of GPIO22 PULLEN_CLR** 0: Keep 1: CLR bits
11	**GPIO11**	GPIO11_PULLEN	**Bitwise CLR operation of GPIO11 PULLEN_CLR** 0: Keep 1: CLR bits
9	**GPIO9**	GPIO9_PULLEN	**Bitwise CLR operation of GPIO9 PULLEN_CLR** 0: Keep 1: CLR bits
8	**GPIO8**	GPIO8_PULLEN	**Bitwise CLR operation of GPIO8 PULLEN_CLR** 0: Keep 1: CLR bits
7	**GPIO7**	GPIO7_PULLEN	**Bitwise CLR operation of GPIO7 PULLEN_CLR** 0: Keep 1: CLR bits
6	**GPIO6**	GPIO6_PULLEN	**Bitwise CLR operation of GPIO6 PULLEN_CLR** 0: Keep 1: CLR bits
5	**GPIO5**	GPIO5_PULLEN	**Bitwise CLR operation of GPIO5 PULLEN_CLR** 0: Keep 1: CLR bits
4	**GPIO4**	GPIO4_PULLEN	**Bitwise CLR operation of GPIO4 PULLEN_CLR** 0: Keep 1: CLR bits
3	**GPIO3**	GPIO3_PULLEN	**Bitwise CLR operation of GPIO3 PULLEN_CLR** 0: Keep 1: CLR bits
2	**GPIO2**	GPIO2_PULLEN	**Bitwise CLR operation of GPIO2 PULLEN_CLR** 0: Keep 1: CLR bits
1	**GPIO1**	GPIO1_PULLEN	**Bitwise CLR operation of GPIO1 PULLEN_CLR** 0: Keep 1: CLR bits
0	**GPIO0**	GPIO0_PULLEN	**Bitwise CLR operation of GPIO0 PULLEN_CLR**

This document contains information that is proprietary to MediaTek Inc.
Unauthorized reproduction or disclosure of this information in whole or in part is strictly prohibited.
MEDIATEK CONFIDENTIAL FOR dengzhenli@farsightedmobile.com USE ONLY

Bit(s)	Mnemonic	Name	Description
			0: Keep 1: CLR bits

A0020110 <u>**GPIO_PULLEN1**</u> **GPIO Pull-up/down Enable Control** **00F01800**

Bit	31	30	29	28	27	26	25	24	23	22	21	20	19	18	17	16
Name									**GPIO55**	**GPIO54**	**GPIO53**	**GPIO52**				
Type									RW	RW	RW	RW				
Reset									1	1	1	1				
Bit	15	14	13	12	11	10	9	8	7	6	5	4	3	2	1	0
Name				**GPIO44**	**GPIO43**											
Type				RW	RW											
Reset				1	1											

Overview: Configures GPIO pull enabling

Bit(s)	Mnemonic	Name	Description
23	**GPIO55**	GPIO55_PULLEN	**GPIO55 PULLEN** 0: Disable 1: Enable
22	**GPIO54**	GPIO54_PULLEN	**GPIO54 PULLEN** 0: Disable 1: Enable
21	**GPIO53**	GPIO53_PULLEN	**GPIO53 PULLEN** 0: Disable 1: Enable
20	**GPIO52**	GPIO52_PULLEN	**GPIO52 PULLEN** 0: Disable 1: Enable
12	**GPIO44**	GPIO44_PULLEN	**GPIO44 PULLEN** 0: Disable 1: Enable
11	**GPIO43**	GPIO43_PULLEN	**GPIO43 PULLEN** 0: Disable 1: Enable

A0020114 <u>**GPIO_PULLEN1_SET**</u> **GPIO Pull-up/down Enable Control** **00000000**

Bit	31	30	29	28	27	26	25	24	23	22	21	20	19	18	17	16
Name									**GPIO55**	**GPIO54**	**GPIO53**	**GPIO52**				
Type									WO	WO	WO	WO				
Reset									0	0	0	0				
Bit	15	14	13	12	11	10	9	8	7	6	5	4	3	2	1	0
Name				**GPIO44**	**GPIO43**											
Type				WO	WO											
Reset				0	0											

This document contains information that is proprietary to MediaTek Inc.
Unauthorized reproduction or disclosure of this information in whole or in part is strictly prohibited.

Overview: For bitwise access of GPIO_PULLEN1

Bit(s)	Mnemonic	Name	Description
23	**GPIO55**	GPIO55_PULLEN	**Bitwise SET operation of GPIO51 PULLEN_SET** 0: Keep 1: SET bits
22	**GPIO54**	GPIO54_PULLEN	**Bitwise SET operation of GPIO44 PULLEN_SET** 0: Keep 1: SET bits
21	**GPIO53**	GPIO53_PULLEN	**Bitwise SET operation of GPIO43 PULLEN_SET** 0: Keep 1: SET bits
20	**GPIO52**	GPIO52_PULLEN	**Bitwise SET operation of GPIO30 PULLEN_SET** 0: Keep 1: SET bits
12	**GPIO44**	GPIO44_PULLEN	**Bitwise SET operation of GPIO44 PULLEN_SET** 0: Keep 1: SET bits
11	**GPIO43**	GPIO43_PULLEN	**Bitwise SET operation of GPIO43 PULLEN_SET** 0: Keep 1: SET bits

A0020118 **GPIO_PULLEN1_CLR** **GPIO Pull-up/down Enable Control** **00000000**

Bit	31	30	29	28	27	26	25	24	23	22	21	20	19	18	17	16
Name									**GPIO55**	**GPIO54**	**GPIO53**	**GPIO52**				
Type									WO	WO	WO	WO				
Reset									0	0	0	0				
Bit	15	14	13	12	11	10	9	8	7	6	5	4	3	2	1	0
Name				**GPIO44**	**GPIO43**											
Type				WO	WO											
Reset				0	0											

Overview: For bitwise access of GPIO_PULLEN1

Bit(s)	Mnemonic	Name	Description
23	**GPIO55**	GPIO55_PULLEN	**Bitwise CLR operation of GPIO51 PULLEN_CLR** 0: Keep 1: CLR bits
22	**GPIO54**	GPIO54_PULLEN	**Bitwise CLR operation of GPIO44 PULLEN_CLR** 0: Keep 1: CLR bits
21	**GPIO53**	GPIO53_PULLEN	**Bitwise CLR operation of GPIO43 PULLEN_CLR** 0: Keep 1: CLR bits
20	**GPIO52**	GPIO52_PULLEN	**Bitwise CLR operation of GPIO30 PULLEN_CLR** 0: Keep 1: CLR bits
12	**GPIO44**	GPIO44_PULLEN	**Bitwise CLR operation of GPIO44 PULLEN_CLR**

This document contains information that is proprietary to MediaTek Inc.
Unauthorized reproduction or disclosure of this information in whole or in part is strictly prohibited.
MEDIATEK CONFIDENTIAL FOR dengzhenli@far-sightedmobile.com USE ONLY

Bit(s)	Mnemonic	Name	Description
			0: Keep 1: CLR bits
11	**GPIO43**	GPIO43_PULLEN	**Bitwise CLR operation of GPIO43 PULLEN_CLR** 0: Keep 1: CLR bits

A0020200 GPIO_DINV0 GPIO Data Inversion Control 00000000

Bit	31	30	29	28	27	26	25	24	23	22	21	20	19	18	17	16
Name	INV31	INV30	INV29	INV28	INV27	INV26	INV25	INV24	INV23	INV22	INV21	INV20	INV19	INV18	INV17	INV16
Type	RW	RW	RW	RW	RW	RW	RW	RW	RW	RW	RW	RW	RW	RW	RW	RW
Reset	0	0	0	0	0	0	0	0	0	0	0	0	0	0	0	0
Bit	15	14	13	12	11	10	9	8	7	6	5	4	3	2	1	0
Name	INV15	INV14	INV13	INV12	INV11	INV10	INV9	INV8	INV7	INV6	INV5	INV4	INV3	INV2	INV1	INV0
Type	RW	RW	RW	RW	RW	RW	RW	RW	RW	RW	RW	RW	RW	RW	RW	RW
Reset	0	0	0	0	0	0	0	0	0	0	0	0	0	0	0	0

Overview: Configures GPIO inversion enabling

Bit(s)	Mnemonic	Name	Description
31	**INV31**	GPIO31_DINV	**GPIO31 inversion control** 0: Keep input value 1: Invert input value
30	**INV30**	GPIO30_DINV	**GPIO30 inversion control** 0: Keep input value 1: Invert input value
29	**INV29**	GPIO29_DINV	**GPIO29 inversion control** 0: Keep input value 1: Invert input value
28	**INV28**	GPIO28_DINV	**GPIO28 inversion control** 0: Keep input value 1: Invert input value
27	**INV27**	GPIO27_DINV	**GPIO27 inversion control** 0: Keep input value 1: Invert input value
26	**INV26**	GPIO26_DINV	**GPIO26 inversion control** 0: Keep input value 1: Invert input value
25	**INV25**	GPIO25_DINV	**GPIO25 inversion control** 0: Keep input value 1: Invert input value
24	**INV24**	GPIO24_DINV	**GPIO24 inversion control** 0: Keep input value 1: Invert input value
23	**INV23**	GPIO23_DINV	**GPIO23 inversion control** 0: Keep input value 1: Invert input value
22	**INV22**	GPIO22_DINV	**GPIO22 inversion control** 0: Keep input value 1: Invert input value
21	**INV21**	GPIO21_DINV	**GPIO21 inversion control**

This document contains information that is proprietary to MediaTek Inc.
Unauthorized reproduction or disclosure of this information in whole or in part is strictly prohibited.
MEDIATEK CONFIDENTIAL FOR dengzhenli@fareastonemobile.com USE ONLY

Bit(s)	Mnemonic	Name	Description
			0: Keep input value 1: Invert input value
20	**INV20**	GPIO20_DINV	**GPIO20 inversion control** 0: Keep input value 1: Invert input value
19	**INV19**	GPIO19_DINV	**GPIO19 inversion control** 0: Keep input value 1: Invert input value
18	**INV18**	GPIO18_DINV	**GPIO18 inversion control** 0: Keep input value 1: Invert input value
17	**INV17**	GPIO17_DINV	**GPIO17 inversion control** 0: Keep input value 1: Invert input value
16	**INV16**	GPIO16_DINV	**GPIO16 inversion control** 0: Keep input value 1: Invert input value
15	**INV15**	GPIO15_DINV	**GPIO15 inversion control** 0: Keep input value 1: Invert input value
14	**INV14**	GPIO14_DINV	**GPIO14 inversion control** 0: Keep input value 1: Invert input value
13	**INV13**	GPIO13_DINV	**GPIO13 inversion control** 0: Keep input value 1: Invert input value
12	**INV12**	GPIO12_DINV	**GPIO12 inversion control** 0: Keep input value 1: Invert input value
11	**INV11**	GPIO11_DINV	**GPIO11 inversion control** 0: Keep input value 1: Invert input value
10	**INV10**	GPIO10_DINV	**GPIO10 inversion control** 0: Keep input value 1: Invert input value
9	**INV9**	GPIO9_DINV	**GPIO9 inversion control** 0: Keep input value 1: Invert input value
8	**INV8**	GPIO8_DINV	**GPIO8 inversion control** 0: Keep input value 1: Invert input value
7	**INV7**	GPIO7_DINV	**GPIO7 inversion control** 0: Keep input value 1: Invert input value
6	**INV6**	GPIO6_DINV	**GPIO6 inversion control** 0: Keep input value 1: Invert input value
5	**INV5**	GPIO5_DINV	**GPIO5 inversion control** 0: Keep input value 1: Invert input value
4	**INV4**	GPIO4_DINV	**GPIO4 inversion control** 0: Keep input value

This document contains information that is proprietary to MediaTek Inc.
Unauthorized reproduction or disclosure of this information in whole or in part is strictly prohibited.
MEDIATEK CONFIDENTIAL FOR dengzhenli@ far-sightedmobile.com USE ONLY

Bit(s)	Mnemonic	Name	Description
			1: Invert input value
3	**INV3**	GPIO3_DINV	**GPIO3 inversion control** 0: Keep input value 1: Invert input value
2	**INV2**	GPIO2_DINV	**GPIO2 inversion control** 0: Keep input value 1: Invert input value
1	**INV1**	GPIO1_DINV	**GPIO1 inversion control** 0: Keep input value 1: Invert input value
0	**INV0**	GPIO0_DINV	**GPIO0 inversion control** 0: Keep input value 1: Invert input value

A0020204 **GPIO_DINV0_SET** **GPIO Data Inversion Control** **00000000**

Bit	31	30	29	28	27	26	25	24	23	22	21	20	19	18	17	16
Name	INV31	INV30	INV29	INV28	INV27	INV26	INV25	INV24	INV23	INV22	INV21	INV20	INV19	INV18	INV17	INV16
Type	WO	WO	WO	WO	WO	WO	WO	WO	WO	WO	WO	WO	WO	WO	WO	WO
Reset	0	0	0	0	0	0	0	0	0	0	0	0	0	0	0	0
Bit	15	14	13	12	11	10	9	8	7	6	5	4	3	2	1	0
Name	INV15	INV14	INV13	INV12	INV11	INV10	INV9	INV8	INV7	INV6	INV5	INV4	INV3	INV2	INV1	INV0
Type	WO	WO	WO	WO	WO	WO	WO	WO	WO	WO	WO	WO	WO	WO	WO	WO
Reset	0	0	0	0	0	0	0	0	0	0	0	0	0	0	0	0

Overview: For bitwise access of GPIO_DINV0

Bit(s)	Mnemonic	Name	Description
31	**INV31**	GPIO31_DINV	**Bitwise SET operation of GPIO31 inversion control** 0: Keep 1: SET bits
30	**INV30**	GPIO30_DINV	**Bitwise SET operation of GPIO30 inversion control** 0: Keep 1: SET bits
29	**INV29**	GPIO29_DINV	**Bitwise SET operation of GPIO29 inversion control** 0: Keep 1: SET bits
28	**INV28**	GPIO28_DINV	**Bitwise SET operation of GPIO28 inversion control** 0: Keep 1: SET bits
27	**INV27**	GPIO27_DINV	**Bitwise SET operation of GPIO27 inversion control** 0: Keep 1: SET bits
26	**INV26**	GPIO26_DINV	**Bitwise SET operation of GPIO26 inversion control** 0: Keep 1: SET bits
25	**INV25**	GPIO25_DINV	**Bitwise SET operation of GPIO25 inversion control** 0: Keep 1: SET bits
24	**INV24**	GPIO24_DINV	**Bitwise SET operation of GPIO24 inversion control**

This document contains information that is proprietary to MediaTek Inc.
Unauthorized reproduction or disclosure of this information in whole or in part is strictly prohibited.
MEDIATEK CONFIDENTIAL FOR dengzhenli@farsightmobile.com USE ONLY

Bit(s)	Mnemonic	Name	Description
			0: Keep 1: SET bits
23	**INV23**	GPIO23_DINV	**Bitwise SET operation of GPIO23 inversion control** 0: Keep 1: SET bits
22	**INV22**	GPIO22_DINV	**Bitwise SET operation of GPIO22 inversion control** 0: Keep 1: SET bits
21	**INV21**	GPIO21_DINV	**Bitwise SET operation of GPIO21 inversion control** 0: Keep 1: SET bits
20	**INV20**	GPIO20_DINV	**Bitwise SET operation of GPIO20 inversion control** 0: Keep 1: SET bits
19	**INV19**	GPIO19_DINV	**Bitwise SET operation of GPIO19 inversion control** 0: Keep 1: SET bits
18	**INV18**	GPIO18_DINV	**Bitwise SET operation of GPIO18 inversion control** 0: Keep 1: SET bits
17	**INV17**	GPIO17_DINV	**Bitwise SET operation of GPIO17 inversion control** 0: Keep 1: SET bits
16	**INV16**	GPIO16_DINV	**Bitwise SET operation of GPIO16 inversion control** 0: Keep 1: SET bits
15	**INV15**	GPIO15_DINV	**Bitwise SET operation of GPIO15 inversion control** 0: Keep 1: SET bits
14	**INV14**	GPIO14_DINV	**Bitwise SET operation of GPIO14 inversion control** 0: Keep 1: SET bits
13	**INV13**	GPIO13_DINV	**Bitwise SET operation of GPIO13 inversion control** 0: Keep 1: SET bits
12	**INV12**	GPIO12_DINV	**Bitwise SET operation of GPIO12 inversion control** 0: Keep 1: SET bits
11	**INV11**	GPIO11_DINV	**Bitwise SET operation of GPIO11 inversion control** 0: Keep 1: SET bits
10	**INV10**	GPIO10_DINV	**Bitwise SET operation of GPIO10 inversion control** 0: Keep 1: SET bits
9	**INV9**	GPIO9_DINV	**Bitwise SET operation of GPIO9 inversion control** 0: Keep 1: SET bits
8	**INV8**	GPIO8_DINV	**Bitwise SET operation of GPIO8 inversion control** 0: Keep 1: SET bits
7	**INV7**	GPIO7_DINV	**Bitwise SET operation of GPIO7 inversion control** 0: Keep

MEDIATEK CONFIDENTIAL FOR dengzhenj@ far-sightedmobile.com USE ONLY

This document contains information that is proprietary to MediaTek Inc.
Unauthorized reproduction or disclosure of this information in whole or in part is strictly prohibited.

Bit(s)	Mnemonic	Name	Description
			1: SET bits
6	**INV6**	GPIO6_DINV	**Bitwise SET operation of GPIO6 inversion control** 0: Keep 1: SET bits
5	**INV5**	GPIO5_DINV	**Bitwise SET operation of GPIO5 inversion control** 0: Keep 1: SET bits
4	**INV4**	GPIO4_DINV	**Bitwise SET operation of GPIO4 inversion control** 0: Keep 1: SET bits
3	**INV3**	GPIO3_DINV	**Bitwise SET operation of GPIO3 inversion control** 0: Keep 1: SET bits
2	**INV2**	GPIO2_DINV	**Bitwise SET operation of GPIO2 inversion control** 0: Keep 1: SET bits
1	**INV1**	GPIO1_DINV	**Bitwise SET operation of GPIO1 inversion control** 0: Keep 1: SET bits
0	**INV0**	GPIO0_DINV	**Bitwise SET operation of GPIO0 inversion control** 0: Keep 1: SET bits

A0020208 **GPIO_DINV0_CLR** **GPIO Data Inversion Control** **00000000**

Bit	31	30	29	28	27	26	25	24	23	22	21	20	19	18	17	16
Name	INV31	INV30	INV29	INV28	INV27	INV26	INV25	INV24	INV23	INV22	INV21	INV20	INV19	INV18	INV17	INV16
Type	WO	WO	WO	WO	WO	WO	WO	WO	WO	WO	WO	WO	WO	WO	WO	WO
Reset	0	0	0	0	0	0	0	0	0	0	0	0	0	0	0	0
Bit	15	14	13	12	11	10	9	8	7	6	5	4	3	2	1	0
Name	INV15	INV14	INV13	INV12	INV11	INV10	INV9	INV8	INV7	INV6	INV5	INV4	INV3	INV2	INV1	INV0
Type	WO	WO	WO	WO	WO	WO	WO	WO	WO	WO	WO	WO	WO	WO	WO	WO
Reset	0	0	0	0	0	0	0	0	0	0	0	0	0	0	0	0

Overview: For bitwise access of GPIO_DINV0

Bit(s)	Mnemonic	Name	Description
31	**INV31**	GPIO31_DINV	**Bitwise CLR operation of GPIO31 inversion control** 0: Keep 1: CLR bits
30	**INV30**	GPIO30_DINV	**Bitwise CLR operation of GPIO30 inversion control** 0: Keep 1: CLR bits
29	**INV29**	GPIO29_DINV	**Bitwise CLR operation of GPIO29 inversion control** 0: Keep 1: CLR bits
28	**INV28**	GPIO28_DINV	**Bitwise CLR operation of GPIO28 inversion control** 0: Keep 1: CLR bits
27	**INV27**	GPIO27_DINV	**Bitwise CLR operation of GPIO27 inversion control**

This document contains information that is proprietary to MediaTek Inc.
Unauthorized reproduction or disclosure of this information in whole or in part is strictly prohibited.
MEDIATEK CONFIDENTIAL FOR dengzhenli@ fantedmobile.com USE ONLY

Bit(s)	Mnemonic	Name	Description
			0: Keep 1: CLR bits
26	**INV26**	GPIO26_DINV	**Bitwise CLR operation of GPIO26 inversion control** 0: Keep 1: CLR bits
25	**INV25**	GPIO25_DINV	**Bitwise CLR operation of GPIO25 inversion control** 0: Keep 1: CLR bits
24	**INV24**	GPIO24_DINV	**Bitwise CLR operation of GPIO24 inversion control** 0: Keep 1: CLR bits
23	**INV23**	GPIO23_DINV	**Bitwise CLR operation of GPIO23 inversion control** 0: Keep 1: CLR bits
22	**INV22**	GPIO22_DINV	**Bitwise CLR operation of GPIO22 inversion control** 0: Keep 1: CLR bits
21	**INV21**	GPIO21_DINV	**Bitwise CLR operation of GPIO21 inversion control** 0: Keep 1: CLR bits
20	**INV20**	GPIO20_DINV	**Bitwise CLR operation of GPIO20 inversion control** 0: Keep 1: CLR bits
19	**INV19**	GPIO19_DINV	**Bitwise CLR operation of GPIO19 inversion control** 0: Keep 1: CLR bits
18	**INV18**	GPIO18_DINV	**Bitwise CLR operation of GPIO18 inversion control** 0: Keep 1: CLR bits
17	**INV17**	GPIO17_DINV	**Bitwise CLR operation of GPIO17 inversion control** 0: Keep 1: CLR bits
16	**INV16**	GPIO16_DINV	**Bitwise CLR operation of GPIO16 inversion control** 0: Keep 1: CLR bits
15	**INV15**	GPIO15_DINV	**Bitwise CLR operation of GPIO15 inversion control** 0: Keep 1: CLR bits
14	**INV14**	GPIO14_DINV	**Bitwise CLR operation of GPIO14 inversion control** 0: Keep 1: CLR bits
13	**INV13**	GPIO13_DINV	**Bitwise CLR operation of GPIO13 inversion control** 0: Keep 1: CLR bits
12	**INV12**	GPIO12_DINV	**Bitwise CLR operation of GPIO12 inversion control** 0: Keep 1: CLR bits
11	**INV11**	GPIO11_DINV	**Bitwise CLR operation of GPIO11 inversion control** 0: Keep 1: CLR bits
10	**INV10**	GPIO10_DINV	**Bitwise CLR operation of GPIO10 inversion control** 0: Keep

This document contains information that is proprietary to MediaTek Inc.
Unauthorized reproduction or disclosure of this information in whole or in part is strictly prohibited.
MEDIATEK CONFIDENTIAL FOR dengzhenli@far-sightedmobile.com USE ONLY

Bit(s)	Mnemonic	Name	Description
			1: CLR bits
9	**INV9**	GPIO9_DINV	**Bitwise CLR operation of GPIO9 inversion control** 0: Keep 1: CLR bits
8	**INV8**	GPIO8_DINV	**Bitwise CLR operation of GPIO8 inversion control** 0: Keep 1: CLR bits
7	**INV7**	GPIO7_DINV	**Bitwise CLR operation of GPIO7 inversion control** 0: Keep 1: CLR bits
6	**INV6**	GPIO6_DINV	**Bitwise CLR operation of GPIO6 inversion control** 0: Keep 1: CLR bits
5	**INV5**	GPIO5_DINV	**Bitwise CLR operation of GPIO5 inversion control** 0: Keep 1: CLR bits
4	**INV4**	GPIO4_DINV	**Bitwise CLR operation of GPIO4 inversion control** 0: Keep 1: CLR bits
3	**INV3**	GPIO3_DINV	**Bitwise CLR operation of GPIO3 inversion control** 0: Keep 1: CLR bits
2	**INV2**	GPIO2_DINV	**Bitwise CLR operation of GPIO2 inversion control** 0: Keep 1: CLR bits
1	**INV1**	GPIO1_DINV	**Bitwise CLR operation of GPIO1 inversion control** 0: Keep 1: CLR bits
0	**INV0**	GPIO0_DINV	**Bitwise CLR operation of GPIO0 inversion control** 0: Keep 1: CLR bits

A0020210 GPIO_DINV1 GPIO Data Inversion Control 00000000

Bit	31	30	29	28	27	26	25	24	23	22	21	20	19	18	17	16
Name									**INV55**	**INV54**	**INV53**	**INV52**	**INV51**	**INV50**	**INV49**	**INV48**
Type									RW	RW	RW	RW	RW	RW	RW	RW
Reset									0	0	0	0	0	0	0	0
Bit	15	14	13	12	11	10	9	8	7	6	5	4	3	2	1	0
Name	**INV47**	**INV46**	**INV45**	**INV44**	**INV43**	**INV42**	**INV41**	**INV40**	**INV39**	**INV38**	**INV37**	**INV36**	**INV35**	**INV34**	**INV33**	**INV32**
Type	RW	RW	RW	RW	RW	RW	RW	RW	RW	RW	RW	RW	RW	RW	RW	RW
Reset	0	0	0	0	0	0	0	0	0	0	0	0	0	0	0	0

Overview: Configures GPIO inversion enabling

Bit(s)	Mnemonic	Name	Description
23	**INV55**	GPIO55_DINV	**GPIO55 inversion control** 0: Keep input value 1: Invert input value
22	**INV54**	GPIO54_DINV	**GPIO54 inversion control** 0: Keep input value

This document contains information that is proprietary to MediaTek Inc.
Unauthorized reproduction or disclosure of this information in whole or in part is strictly prohibited.
MEDIATEK CONFIDENTIAL FOR dengzhenli@far-sightedmobile.com USE ONLY

Bit(s)	Mnemonic	Name	Description
			1: Invert input value
21	**INV53**	GPIO53_DINV	**GPIO53 inversion control** 0: Keep input value 1: Invert input value
20	**INV52**	GPIO52_DINV	**GPIO52 inversion control** 0: Keep input value 1: Invert input value
19	**INV51**	GPIO51_DINV	**GPIO51 inversion control** 0: Keep input value 1: Invert input value
18	**INV50**	GPIO50_DINV	**GPIO50 inversion control** 0: Keep input value 1: Invert input value
17	**INV49**	GPIO49_DINV	**GPIO49 inversion control** 0: Keep input value 1: Invert input value
16	**INV48**	GPIO48_DINV	**GPIO48 inversion control** 0: Keep input value 1: Invert input value
15	**INV47**	GPIO47_DINV	**GPIO47 inversion control** 0: Keep input value 1: Invert input value
14	**INV46**	GPIO46_DINV	**GPIO46 inversion control** 0: Keep input value 1: Invert input value
13	**INV45**	GPIO45_DINV	**GPIO45 inversion control** 0: Keep input value 1: Invert input value
12	**INV44**	GPIO44_DINV	**GPIO44 inversion control** 0: Keep input value 1: Invert input value
11	**INV43**	GPIO43_DINV	**GPIO43 inversion control** 0: Keep input value 1: Invert input value
10	**INV42**	GPIO42_DINV	**GPIO42 inversion control** 0: Keep input value 1: Invert input value
9	**INV41**	GPIO41_DINV	**GPIO41 inversion control** 0: Keep input value 1: Invert input value
8	**INV40**	GPIO40_DINV	**GPIO40 inversion control** 0: Keep input value 1: Invert input value
7	**INV39**	GPIO39_DINV	**GPIO39 inversion control** 0: Keep input value 1: Invert input value
6	**INV38**	GPIO38_DINV	**GPIO38 inversion control** 0: Keep input value 1: Invert input value
5	**INV37**	GPIO37_DINV	**GPIO37 inversion control** 0: Keep input value 1: Invert input value

This document contains information that is proprietary to MediaTek Inc.
Unauthorized reproduction or disclosure of this information in whole or in part is strictly prohibited.
MEDIATEK CONFIDENTIAL FOR dengzhenli@fariightmobile.com USE ONLY

Bit(s)	Mnemonic	Name	Description
4	**INV36**	GPIO36_DINV	**GPIO36 inversion control** 0: Keep input value 1: Invert input value
3	**INV35**	GPIO35_DINV	**GPIO35 inversion control** 0: Keep input value 1: Invert input value
2	**INV34**	GPIO34_DINV	**GPIO34 inversion control** 0: Keep input value 1: Invert input value
1	**INV33**	GPIO33_DINV	**GPIO33 inversion control** 0: Keep input value 1: Invert input value
0	**INV32**	GPIO32_DINV	**GPIO32 inversion control** 0: Keep input value 1: Invert input value

A0020214 **GPIO_DINV1_SET** **GPIO Data Inversion Control** **00000000**

Bit	31	30	29	28	27	26	25	24	23	22	21	20	19	18	17	16
Name									INV55	INV54	INV53	INV52	INV51	INV50	INV49	INV48
Type									WO	WO	WO	WO	WO	WO	WO	WO
Reset									0	0	0	0	0	0	0	0
Bit	15	14	13	12	11	10	9	8	7	6	5	4	3	2	1	0
Name	INV47	INV46	INV45	INV44	INV43	INV42	INV41	INV40	INV39	INV38	INV37	INV36	INV35	INV34	INV33	INV32
Type	WO	WO	WO	WO	WO	WO	WO	WO	WO	WO	WO	WO	WO	WO	WO	WO
Reset	0	0	0	0	0	0	0	0	0	0	0	0	0	0	0	0

Overview: For bitwise access of GPIO_DINV1

Bit(s)	Mnemonic	Name	Description
23	**INV55**	GPIO55_DINV	**Bitwise SET operation of GPIO55 inversion control** 0: Keep 1: SET bits
22	**INV54**	GPIO54_DINV	**Bitwise SET operation of GPIO54 inversion control** 0: Keep 1: SET bits
21	**INV53**	GPIO53_DINV	**Bitwise SET operation of GPIO53 inversion control** 0: Keep 1: SET bits
20	**INV52**	GPIO52_DINV	**Bitwise SET operation of GPIO52 inversion control** 0: Keep 1: SET bits
19	**INV51**	GPIO51_DINV	**Bitwise SET operation of GPIO51 inversion control** 0: Keep 1: SET bits
18	**INV50**	GPIO50_DINV	**Bitwise SET operation of GPIO50 inversion control** 0: Keep 1: SET bits
17	**INV49**	GPIO49_DINV	**Bitwise SET operation of GPIO49 inversion control** 0: Keep

This document contains information that is proprietary to MediaTek Inc.
Unauthorized reproduction or disclosure of this information in whole or in part is strictly prohibited.

MEDIATEK CONFIDENTIAL FOR dengzhenli@far-sightedmobile.com USE ONLY

Bit(s)	Mnemonic	Name	Description
			1: SET bits
16	**INV48**	GPIO48_DINV	**Bitwise SET operation of GPIO48 inversion control** 0: Keep 1: SET bits
15	**INV47**	GPIO47_DINV	**Bitwise SET operation of GPIO47 inversion control** 0: Keep 1: SET bits
14	**INV46**	GPIO46_DINV	**Bitwise SET operation of GPIO46 inversion control** 0: Keep 1: SET bits
13	**INV45**	GPIO45_DINV	**Bitwise SET operation of GPIO45 inversion control** 0: Keep 1: SET bits
12	**INV44**	GPIO44_DINV	**Bitwise SET operation of GPIO44 inversion control** 0: Keep 1: SET bits
11	**INV43**	GPIO43_DINV	**Bitwise SET operation of GPIO43 inversion control** 0: Keep 1: SET bits
10	**INV42**	GPIO42_DINV	**Bitwise SET operation of GPIO42 inversion control** 0: Keep 1: SET bits
9	**INV41**	GPIO41_DINV	**Bitwise SET operation of GPIO41 inversion control** 0: Keep 1: SET bits
8	**INV40**	GPIO40_DINV	**Bitwise SET operation of GPIO40 inversion control** 0: Keep 1: SET bits
7	**INV39**	GPIO39_DINV	**Bitwise SET operation of GPIO39 inversion control** 0: Keep 1: SET bits
6	**INV38**	GPIO38_DINV	**Bitwise SET operation of GPIO38 inversion control** 0: Keep 1: SET bits
5	**INV37**	GPIO37_DINV	**Bitwise SET operation of GPIO37 inversion control** 0: Keep 1: SET bits
4	**INV36**	GPIO36_DINV	**Bitwise SET operation of GPIO36 inversion control** 0: Keep 1: SET bits
3	**INV35**	GPIO35_DINV	**Bitwise SET operation of GPIO35 inversion control** 0: Keep 1: SET bits
2	**INV34**	GPIO34_DINV	**Bitwise SET operation of GPIO34 inversion control** 0: Keep 1: SET bits
1	**INV33**	GPIO33_DINV	**Bitwise SET operation of GPIO33 inversion control** 0: Keep 1: SET bits
0	**INV32**	GPIO32_DINV	**Bitwise SET operation of GPIO32 inversion control** 0: Keep 1: SET bits

This document contains information that is proprietary to MediaTek Inc.
Unauthorized reproduction or disclosure of this information in whole or in part is strictly prohibited.
MEDIATEK CONFIDENTIAL FOR dengzhenli@ far-sightedmobile.com USE ONLY

A0020218 **GPIO_DINV1_CLR** **GPIO Data Inversion Control** **00000000**

Bit	31	30	29	28	27	26	25	24	23	22	21	20	19	18	17	16
Name									INV55	INV54	INV53	INV52	INV51	INV50	INV49	INV48
Type									WO	WO	WO	WO	WO	WO	WO	WO
Reset									0	0	0	0	0	0	0	0
Bit	15	14	13	12	11	10	9	8	7	6	5	4	3	2	1	0
Name	INV47	INV46	INV45	INV44	INV43	INV42	INV41	INV40	INV39	INV38	INV37	INV36	INV35	INV34	INV33	INV32
Type	WO	WO	WO	WO	WO	WO	WO	WO	WO	WO	WO	WO	WO	WO	WO	WO
Reset	0	0	0	0	0	0	0	0	0	0	0	0	0	0	0	0

Overview: For bitwise access of GPIO_DINV1

Bit(s)	Mnemonic	Name	Description
23	**INV55**	GPIO55_DINV	**Bitwise CLR operation of GPIO55 inversion control** 0: Keep 1: CLR bits
22	**INV54**	GPIO54_DINV	**Bitwise CLR operation of GPIO54 inversion control** 0: Keep 1: CLR bits
21	**INV53**	GPIO53_DINV	**Bitwise CLR operation of GPIO53 inversion control** 0: Keep 1: CLR bits
20	**INV52**	GPIO52_DINV	**Bitwise CLR operation of GPIO52 inversion control** 0: Keep 1: CLR bits
19	**INV51**	GPIO51_DINV	**Bitwise CLR operation of GPIO51 inversion control** 0: Keep 1: CLR bits
18	**INV50**	GPIO50_DINV	**Bitwise CLR operation of GPIO50 inversion control** 0: Keep 1: CLR bits
17	**INV49**	GPIO49_DINV	**Bitwise CLR operation of GPIO49 inversion control** 0: Keep 1: CLR bits
16	**INV48**	GPIO48_DINV	**Bitwise CLR operation of GPIO48 inversion control** 0: Keep 1: CLR bits
15	**INV47**	GPIO47_DINV	**Bitwise CLR operation of GPIO47 inversion control** 0: Keep 1: CLR bits
14	**INV46**	GPIO46_DINV	**Bitwise CLR operation of GPIO46 inversion control** 0: Keep 1: CLR bits
13	**INV45**	GPIO45_DINV	**Bitwise CLR operation of GPIO45 inversion control** 0: Keep 1: CLR bits
12	**INV44**	GPIO44_DINV	**Bitwise CLR operation of GPIO44 inversion control** 0: Keep 1: CLR bits

This document contains information that is proprietary to MediaTek Inc.
Unauthorized reproduction or disclosure of this information in whole or in part is strictly prohibited.
MEDIATEK CONFIDENTIAL FOR dengzhenli@ far-sightedmobile.com USE ONLY

Bit(s)	Mnemonic	Name	Description
11	**INV43**	GPIO43_DINV	**Bitwise CLR operation of GPIO43 inversion control** 0: Keep 1: CLR bits
10	**INV42**	GPIO42_DINV	**Bitwise CLR operation of GPIO42 inversion control** 0: Keep 1: CLR bits
9	**INV41**	GPIO41_DINV	**Bitwise CLR operation of GPIO41 inversion control** 0: Keep 1: CLR bits
8	**INV40**	GPIO40_DINV	**Bitwise CLR operation of GPIO40 inversion control** 0: Keep 1: CLR bits
7	**INV39**	GPIO39_DINV	**Bitwise CLR operation of GPIO39 inversion control** 0: Keep 1: CLR bits
6	**INV38**	GPIO38_DINV	**Bitwise CLR operation of GPIO38 inversion control** 0: Keep 1: CLR bits
5	**INV37**	GPIO37_DINV	**Bitwise CLR operation of GPIO37 inversion control** 0: Keep 1: CLR bits
4	**INV36**	GPIO36_DINV	**Bitwise CLR operation of GPIO36 inversion control** 0: Keep 1: CLR bits
3	**INV35**	GPIO35_DINV	**Bitwise CLR operation of GPIO35 inversion control** 0: Keep 1: CLR bits
2	**INV34**	GPIO34_DINV	**Bitwise CLR operation of GPIO34 inversion control** 0: Keep 1: CLR bits
1	**INV33**	GPIO33_DINV	**Bitwise CLR operation of GPIO33 inversion control** 0: Keep 1: CLR bits
0	**INV32**	GPIO32_DINV	**Bitwise CLR operation of GPIO32 inversion control** 0: Keep 1: CLR bits

A0020300 GPIO_DOUT0 GPIO Output Data Control 04000800

Bit	31	30	29	28	27	26	25	24	23	22	21	20	19	18	17	16
Name	**GPIO31**	**GPIO30**	**GPIO29**	**GPIO28**	**GPIO27**	**GPIO26**	**GPIO25**	**GPIO24**	**GPIO23**	**GPIO22**	**GPIO21**	**GPIO20**	**GPIO19**	**GPIO18**	**GPIO17**	**GPIO16**
Type	RW	RW	RW	RW	RW	RW	RW	RW	RW	RW	RW	RW	RW	RW	RW	RW
Reset	0	0	0	0	0	1	0	0	0	0	0	0	0	0	0	0
Bit	15	14	13	12	11	10	9	8	7	6	5	4	3	2	1	0
Name	**GPIO15**	**GPIO14**	**GPIO13**	**GPIO12**	**GPIO11**	**GPIO10**	**GPIO9**	**GPIO8**	**GPIO7**	**GPIO6**	**GPIO5**	**GPIO4**	**GPIO3**	**GPIO2**	**GPIO1**	**GPIO0**
Type	RW	RW	RW	RW	RW	RW	RW	RW	RW	RW	RW	RW	RW	RW	RW	RW
Reset	0	0	0	0	1	0	0	0	0	0	0	0	0	0	0	0

Overview: Configures GPIO output value

This document contains information that is proprietary to MediaTek Inc.
Unauthorized reproduction or disclosure of this information in whole or in part is strictly prohibited.

Bit(s)	Mnemonic	Name	Description
31	**GPIO31**	GPIO31_OUT	**GPIO31 data output value** 0: GPIO output LO 1: GPIO output HI
30	**GPIO30**	GPIO30_OUT	**GPIO30 data output value** 0: GPIO output LO 1: GPIO output HI
29	**GPIO29**	GPIO29_OUT	**GPIO29 data output value** 0: GPIO output LO 1: GPIO output HI
28	**GPIO28**	GPIO28_OUT	**GPIO28 data output value** 0: GPIO output LO 1: GPIO output HI
27	**GPIO27**	GPIO27_OUT	**GPIO27 data output value** 0: GPIO output LO 1: GPIO output HI
26	**GPIO26**	GPIO26_OUT	**GPIO26 data output value** 0: GPIO output LO 1: GPIO output HI
25	**GPIO25**	GPIO25_OUT	**GPIO25 data output value** 0: GPIO output LO 1: GPIO output HI
24	**GPIO24**	GPIO24_OUT	**GPIO24 data output value** 0: GPIO output LO 1: GPIO output HI
23	**GPIO23**	GPIO23_OUT	**GPIO23 data output value** 0: GPIO output LO 1: GPIO output HI
22	**GPIO22**	GPIO22_OUT	**GPIO22 data output value** 0: GPIO output LO 1: GPIO output HI
21	**GPIO21**	GPIO21_OUT	**GPIO21 data output value** 0: GPIO output LO 1: GPIO output HI
20	**GPIO20**	GPIO20_OUT	**GPIO20 data output value** 0: GPIO output LO 1: GPIO output HI
19	**GPIO19**	GPIO19_OUT	**GPIO19 data output value** 0: GPIO output LO 1: GPIO output HI
18	**GPIO18**	GPIO18_OUT	**GPIO18 data output value** 0: GPIO output LO 1: GPIO output HI
17	**GPIO17**	GPIO17_OUT	**GPIO17 data output value** 0: GPIO output LO 1: GPIO output HI
16	**GPIO16**	GPIO16_OUT	**GPIO16 data output value** 0: GPIO output LO 1: GPIO output HI
15	**GPIO15**	GPIO15_OUT	**GPIO15 data output value** 0: GPIO output LO 1: GPIO output HI
14	**GPIO14**	GPIO14_OUT	**GPIO14 data output value**

This document contains information that is proprietary to MediaTek Inc.
Unauthorized reproduction or disclosure of this information in whole or in part is strictly prohibited.
MEDIATEK CONFIDENTIAL FOR dengzhenli@ farsightedmobile.com USE ONLY

Bit(s)	Mnemonic	Name	Description
			0: GPIO output LO 1: GPIO output HI
13	**GPIO13**	GPIO13_OUT	**GPIO13 data output value** 0: GPIO output LO 1: GPIO output HI
12	**GPIO12**	GPIO12_OUT	**GPIO12 data output value** 0: GPIO output LO 1: GPIO output HI
11	**GPIO11**	GPIO11_OUT	**GPIO11 data output value** 0: GPIO output LO 1: GPIO output HI
10	**GPIO10**	GPIO10_OUT	**GPIO10 data output value** 0: GPIO output LO 1: GPIO output HI
9	**GPIO9**	GPIO9_OUT	**GPIO9 data output value** 0: GPIO output LO 1: GPIO output HI
8	**GPIO8**	GPIO8_OUT	**GPIO8 data output value** 0: GPIO output LO 1: GPIO output HI
7	**GPIO7**	GPIO7_OUT	**GPIO7 data output value** 0: GPIO output LO 1: GPIO output HI
6	**GPIO6**	GPIO6_OUT	**GPIO6 data output value** 0: GPIO output LO 1: GPIO output HI
5	**GPIO5**	GPIO5_OUT	**GPIO5 data output value** 0: GPIO output LO 1: GPIO output HI
4	**GPIO4**	GPIO4_OUT	**GPIO4 data output value** 0: GPIO output LO 1: GPIO output HI
3	**GPIO3**	GPIO3_OUT	**GPIO3 data output value** 0: GPIO output LO 1: GPIO output HI
2	**GPIO2**	GPIO2_OUT	**GPIO2 data output value** 0: GPIO output LO 1: GPIO output HI
1	**GPIO1**	GPIO1_OUT	**GPIO1 data output value** 0: GPIO output LO 1: GPIO output HI
0	**GPIO0**	GPIO0_OUT	**GPIO0 data output value** 0: GPIO output LO 1: GPIO output HI

A0020304 **GPIO_DOUT0_SET** **GPIO Output Data Control** **00000000**

Bit	31	30	29	28	27	26	25	24	23	22	21	20	19	18	17	16
Name	**GPIO31**	**GPIO30**	**GPIO29**	**GPIO28**	**GPIO27**	**GPIO26**	**GPIO25**	**GPIO24**	**GPIO23**	**GPIO22**	**GPIO21**	**GPIO20**	**GPIO19**	**GPIO18**	**GPIO17**	**GPIO16**
Type	WO	WO	WO	WO	WO	WO	WO	WO	WO	WO	WO	WO	WO	WO	WO	WO

This document contains information that is proprietary to MediaTek Inc.
Unauthorized reproduction or disclosure of this information in whole or in part is strictly prohibited.
MEDIATEK CONFIDENTIAL FOR dengzheni@ fan-lightedmobile.com USE ONLY

Reset	0	0	0	0	0	0	0	0	0	0	0	0	0	0	0	0
Bit	15	14	13	12	11	10	9	8	7	6	5	4	3	2	1	0
Name	GPIO15	GPIO14	GPIO13	GPIO12	GPIO11	GPIO10	GPIO9	GPIO8	GPIO7	GPIO6	GPIO5	GPIO4	GPIO3	GPIO2	GPIO1	GPIO0
Type	WO	WO	WO	WO	WO	WO	WO	WO	WO	WO	WO	WO	WO	WO	WO	WO
Reset	0	0	0	0	0	0	0	0	0	0	0	0	0	0	0	0

Overview: For bitwise access of GPIO_DIR0

Bit(s)	Mnemonic	Name	Description
31	**GPIO31**	GPIO31_OUT	**Bitwise SET operation of GPIO31 data output value** 0: Keep 1: SET bits
30	**GPIO30**	GPIO30_OUT	**Bitwise SET operation of GPIO30 data output value** 0: Keep 1: SET bits
29	**GPIO29**	GPIO29_OUT	**Bitwise SET operation of GPIO29 data output value** 0: Keep 1: SET bits
28	**GPIO28**	GPIO28_OUT	**Bitwise SET operation of GPIO28 data output value** 0: Keep 1: SET bits
27	**GPIO27**	GPIO27_OUT	**Bitwise SET operation of GPIO27 data output value** 0: Keep 1: SET bits
26	**GPIO26**	GPIO26_OUT	**Bitwise SET operation of GPIO26 data output value** 0: Keep 1: SET bits
25	**GPIO25**	GPIO25_OUT	**Bitwise SET operation of GPIO25 data output value** 0: Keep 1: SET bits
24	**GPIO24**	GPIO24_OUT	**Bitwise SET operation of GPIO24 data output value** 0: Keep 1: SET bits
23	**GPIO23**	GPIO23_OUT	**Bitwise SET operation of GPIO23 data output value** 0: Keep 1: SET bits
22	**GPIO22**	GPIO22_OUT	**Bitwise SET operation of GPIO22 data output value** 0: Keep 1: SET bits
21	**GPIO21**	GPIO21_OUT	**Bitwise SET operation of GPIO21 data output value** 0: Keep 1: SET bits
20	**GPIO20**	GPIO20_OUT	**Bitwise SET operation of GPIO20 data output value** 0: Keep 1: SET bits
19	**GPIO19**	GPIO19_OUT	**Bitwise SET operation of GPIO19 data output value** 0: Keep 1: SET bits
18	**GPIO18**	GPIO18_OUT	**Bitwise SET operation of GPIO18 data output value** 0: Keep 1: SET bits
17	**GPIO17**	GPIO17_OUT	**Bitwise SET operation of GPIO17 data output value**

MEDIATEK CONFIDENTIAL FOR dengzhenli@farsightedmobile.com USE ONLY

This document contains information that is proprietary to MediaTek Inc.
Unauthorized reproduction or disclosure of this information in whole or in part is strictly prohibited.

Bit(s)	Mnemonic	Name	Description
			0: Keep 1: SET bits
16	**GPIO16**	GPIO16_OUT	**Bitwise SET operation of GPIO16 data output value** 0: Keep 1: SET bits
15	**GPIO15**	GPIO15_OUT	**Bitwise SET operation of GPIO15 data output value** 0: Keep 1: SET bits
14	**GPIO14**	GPIO14_OUT	**Bitwise SET operation of GPIO14 data output value** 0: Keep 1: SET bits
13	**GPIO13**	GPIO13_OUT	**Bitwise SET operation of GPIO13 data output value** 0: Keep 1: SET bits
12	**GPIO12**	GPIO12_OUT	**Bitwise SET operation of GPIO12 data output value** 0: Keep 1: SET bits
11	**GPIO11**	GPIO11_OUT	**Bitwise SET operation of GPIO11 data output value** 0: Keep 1: SET bits
10	**GPIO10**	GPIO10_OUT	**Bitwise SET operation of GPIO10 data output value** 0: Keep 1: SET bits
9	**GPIO9**	GPIO9_OUT	**Bitwise SET operation of GPIO9 data output value** 0: Keep 1: SET bits
8	**GPIO8**	GPIO8_OUT	**Bitwise SET operation of GPIO8 data output value** 0: Keep 1: SET bits
7	**GPIO7**	GPIO7_OUT	**Bitwise SET operation of GPIO7 data output value** 0: Keep 1: SET bits
6	**GPIO6**	GPIO6_OUT	**Bitwise SET operation of GPIO6 data output value** 0: Keep 1: SET bits
5	**GPIO5**	GPIO5_OUT	**Bitwise SET operation of GPIO5 data output value** 0: Keep 1: SET bits
4	**GPIO4**	GPIO4_OUT	**Bitwise SET operation of GPIO4 data output value** 0: Keep 1: SET bits
3	**GPIO3**	GPIO3_OUT	**Bitwise SET operation of GPIO3 data output value** 0: Keep 1: SET bits
2	**GPIO2**	GPIO2_OUT	**Bitwise SET operation of GPIO2 data output value** 0: Keep 1: SET bits
1	**GPIO1**	GPIO1_OUT	**Bitwise SET operation of GPIO1 data output value** 0: Keep 1: SET bits
0	**GPIO0**	GPIO0_OUT	**Bitwise SET operation of GPIO0 data output value** 0: Keep

This document contains information that is proprietary to MediaTek Inc.
Unauthorized reproduction or disclosure of this information in whole or in part is strictly prohibited.
MEDIATEK CONFIDENTIAL FOR dengzhenli@ far-sightedmobile.com USE ONLY

Bit(s)	Mnemonic	Name	Description
			1: SET bits

A0020308 **GPIO_DOUT0_CLR** **GPIO Output Data Control** **00000000**

Bit	31	30	29	28	27	26	25	24	23	22	21	20	19	18	17	16
Name	GPIO31	GPIO30	GPIO29	GPIO28	GPIO27	GPIO26	GPIO25	GPIO24	GPIO23	GPIO22	GPIO21	GPIO20	GPIO19	GPIO18	GPIO17	GPIO16
Type	WO	WO	WO	WO	WO	WO	WO	WO	WO	WO	WO	WO	WO	WO	WO	WO
Reset	0	0	0	0	0	0	0	0	0	0	0	0	0	0	0	0
Bit	15	14	13	12	11	10	9	8	7	6	5	4	3	2	1	0
Name	GPIO15	GPIO14	GPIO13	GPIO12	GPIO11	GPIO10	GPIO9	GPIO8	GPIO7	GPIO6	GPIO5	GPIO4	GPIO3	GPIO2	GPIO1	GPIO0
Type	WO	WO	WO	WO	WO	WO	WO	WO	WO	WO	WO	WO	WO	WO	WO	WO
Reset	0	0	0	0	0	0	0	0	0	0	0	0	0	0	0	0

Overview: For bitwise access of GPIO_DIR0

Bit(s)	Mnemonic	Name	Description
31	**GPIO31**	GPIO31_OUT	**Bitwise CLR operation of GPIO31 data output value** 0: Keep 1: CLR bits
30	**GPIO30**	GPIO30_OUT	**Bitwise CLR operation of GPIO30 data output value** 0: Keep 1: CLR bits
29	**GPIO29**	GPIO29_OUT	**Bitwise CLR operation of GPIO29 data output value** 0: Keep 1: CLR bits
28	**GPIO28**	GPIO28_OUT	**Bitwise CLR operation of GPIO28 data output value** 0: Keep 1: CLR bits
27	**GPIO27**	GPIO27_OUT	**Bitwise CLR operation of GPIO27 data output value** 0: Keep 1: CLR bits
26	**GPIO26**	GPIO26_OUT	**Bitwise CLR operation of GPIO26 data output value** 0: Keep 1: CLR bits
25	**GPIO25**	GPIO25_OUT	**Bitwise CLR operation of GPIO25 data output value** 0: Keep 1: CLR bits
24	**GPIO24**	GPIO24_OUT	**Bitwise CLR operation of GPIO24 data output value** 0: Keep 1: CLR bits
23	**GPIO23**	GPIO23_OUT	**Bitwise CLR operation of GPIO23 data output value** 0: Keep 1: CLR bits
22	**GPIO22**	GPIO22_OUT	**Bitwise CLR operation of GPIO22 data output value** 0: Keep 1: CLR bits
21	**GPIO21**	GPIO21_OUT	**Bitwise CLR operation of GPIO21 data output value** 0: Keep 1: CLR bits

This document contains information that is proprietary to MediaTek Inc.
Unauthorized reproduction or disclosure of this information in whole or in part is strictly prohibited.
MEDIATEK CONFIDENTIAL FOR dengzhenli@ farsightedmobile.com USE ONLY

Bit(s)	Mnemonic	Name	Description
20	**GPIO20**	GPIO20_OUT	**Bitwise CLR operation of GPIO20 data output value** 0: Keep 1: CLR bits
19	**GPIO19**	GPIO19_OUT	**Bitwise CLR operation of GPIO19 data output value** 0: Keep 1: CLR bits
18	**GPIO18**	GPIO18_OUT	**Bitwise CLR operation of GPIO18 data output value** 0: Keep 1: CLR bits
17	**GPIO17**	GPIO17_OUT	**Bitwise CLR operation of GPIO17 data output value** 0: Keep 1: CLR bits
16	**GPIO16**	GPIO16_OUT	**Bitwise CLR operation of GPIO16 data output value** 0: Keep 1: CLR bits
15	**GPIO15**	GPIO15_OUT	**Bitwise CLR operation of GPIO15 data output value** 0: Keep 1: CLR bits
14	**GPIO14**	GPIO14_OUT	**Bitwise CLR operation of GPIO14 data output value** 0: Keep 1: CLR bits
13	**GPIO13**	GPIO13_OUT	**Bitwise CLR operation of GPIO13 data output value** 0: Keep 1: CLR bits
12	**GPIO12**	GPIO12_OUT	**Bitwise CLR operation of GPIO12 data output value** 0: Keep 1: CLR bits
11	**GPIO11**	GPIO11_OUT	**Bitwise CLR operation of GPIO11 data output value** 0: Keep 1: CLR bits
10	**GPIO10**	GPIO10_OUT	**Bitwise CLR operation of GPIO10 data output value** 0: Keep 1: CLR bits
9	**GPIO9**	GPIO9_OUT	**Bitwise CLR operation of GPIO9 data output value** 0: Keep 1: CLR bits
8	**GPIO8**	GPIO8_OUT	**Bitwise CLR operation of GPIO8 data output value** 0: Keep 1: CLR bits
7	**GPIO7**	GPIO7_OUT	**Bitwise CLR operation of GPIO7 data output value** 0: Keep 1: CLR bits
6	**GPIO6**	GPIO6_OUT	**Bitwise CLR operation of GPIO6 data output value** 0: Keep 1: CLR bits
5	**GPIO5**	GPIO5_OUT	**Bitwise CLR operation of GPIO5 data output value** 0: Keep 1: CLR bits
4	**GPIO4**	GPIO4_OUT	**Bitwise CLR operation of GPIO4 data output value** 0: Keep 1: CLR bits
3	**GPIO3**	GPIO3_OUT	**Bitwise CLR operation of GPIO3 data output value**

This document contains information that is proprietary to MediaTek Inc.
Unauthorized reproduction or disclosure of this information in whole or in part is strictly prohibited.
MEDIATEK CONFIDENTIAL FOR dengzhenli@farsightedmobile.com USE ONLY

Bit(s)	Mnemonic	Name	Description
			0: Keep 1: CLR bits
2	**GPIO2**	GPIO2_OUT	**Bitwise CLR operation of GPIO2 data output value** 0: Keep 1: CLR bits
1	**GPIO1**	GPIO1_OUT	**Bitwise CLR operation of GPIO1 data output value** 0: Keep 1: CLR bits
0	**GPIO0**	GPIO0_OUT	**Bitwise CLR operation of GPIO0 data output value** 0: Keep 1: CLR bits

A0020310 GPIO_DOUT1 GPIO Output Data Control 00004000

Bit	31	30	29	28	27	26	25	24	23	22	21	20	19	18	17	16
Name									GPIO55	GPIO54			GPIO51	GPIO50	GPIO49	GPIO48
Type									RW	RW			RW	RW	RW	RW
Reset									0	0			0	0	0	0
Bit	15	14	13	12	11	10	9	8	7	6	5	4	3	2	1	0
Name	GPIO47	GPIO46	GPIO45	GPIO44	GPIO43	GPIO42	GPIO41	GPIO40	GPIO39	GPIO38	GPIO37	GPIO36	GPIO35	GPIO34	GPIO33	GPIO32
Type	RW	RW	RW	RW	RW	RW	RW	RW	RW	RW	RW	RW	RW	RW	RW	RW
Reset	0	1	0	0	0	0	0	0	0	0	0	0	0	0	0	0

Overview: Configures GPIO output value

Bit(s)	Mnemonic	Name	Description
23	**GPIO55**	GPIO55_OUT	**GPIO55 data output value** 0: GPIO output LO 1: GPIO output HI
22	**GPIO54**	GPIO54_OUT	**GPIO54 data output value** 0: GPIO output LO 1: GPIO output HI
19	**GPIO51**	GPIO51_OUT	**GPIO51 data output value** 0: GPIO output LO 1: GPIO output HI
18	**GPIO50**	GPIO50_OUT	**GPIO50 data output value** 0: GPIO output LO 1: GPIO output HI
17	**GPIO49**	GPIO49_OUT	**GPIO49 data output value** 0: GPIO output LO 1: GPIO output HI
16	**GPIO48**	GPIO48_OUT	**GPIO48 data output value** 0: GPIO output LO 1: GPIO output HI
15	**GPIO47**	GPIO47_OUT	**GPIO47 data output value** 0: GPIO output LO 1: GPIO output HI
14	**GPIO46**	GPIO46_OUT	**GPIO46 data output value** 0: GPIO output LO 1: GPIO output HI

This document contains information that is proprietary to MediaTek Inc.
Unauthorized reproduction or disclosure of this information in whole or in part is strictly prohibited.
MEDIATEK CONFIDENTIAL FOR dengzhenli@fangchtechmobile.com USE ONLY

Bit(s)	Mnemonic	Name	Description
13	**GPIO45**	GPIO45_OUT	**GPIO45 data output value** 0: GPIO output LO 1: GPIO output HI
12	**GPIO44**	GPIO44_OUT	**GPIO44 data output value** 0: GPIO output LO 1: GPIO output HI
11	**GPIO43**	GPIO43_OUT	**GPIO43 data output value** 0: GPIO output LO 1: GPIO output HI
10	**GPIO42**	GPIO42_OUT	**GPIO42 data output value** 0: GPIO output LO 1: GPIO output HI
9	**GPIO41**	GPIO41_OUT	**GPIO41 data output value** 0: GPIO output LO 1: GPIO output HI
8	**GPIO40**	GPIO40_OUT	**GPIO40 data output value** 0: GPIO output LO 1: GPIO output HI
7	**GPIO39**	GPIO39_OUT	**GPIO39 data output value** 0: GPIO output LO 1: GPIO output HI
6	**GPIO38**	GPIO38_OUT	**GPIO38 data output value** 0: GPIO output LO 1: GPIO output HI
5	**GPIO37**	GPIO37_OUT	**GPIO37 data output value** 0: GPIO output LO 1: GPIO output HI
4	**GPIO36**	GPIO36_OUT	**GPIO36 data output value** 0: GPIO output LO 1: GPIO output HI
3	**GPIO35**	GPIO35_OUT	**GPIO35 data output value** 0: GPIO output LO 1: GPIO output HI
2	**GPIO34**	GPIO34_OUT	**GPIO34 data output value** 0: GPIO output LO 1: GPIO output HI
1	**GPIO33**	GPIO33_OUT	**GPIO33 data output value** 0: GPIO output LO 1: GPIO output HI
0	**GPIO32**	GPIO32_OUT	**GPIO32 data output value** 0: GPIO output LO 1: GPIO output HI

A0020314 **GPIO_DOUT1_SET** **GPIO Output Data Control** **00000000**

Bit	31	30	29	28	27	26	25	24	23	22	21	20	19	18	17	16
Name									GPIO55	GPIO54			GPIO51	GPIO50	GPIO49	GPIO48
Type									WO	WO			WO	WO	WO	WO
Reset									0	0			0	0	0	0
Bit	15	14	13	12	11	10	9	8	7	6	5	4	3	2	1	0

This document contains information that is proprietary to MediaTek Inc.
Unauthorized reproduction or disclosure of this information in whole or in part is strictly prohibited.
MEDIATEK CONFIDENTIAL FOR dengzhenli@ farsightedmobile.com USE ONLY

Name	GPIO47	GPIO46	GPIO45	GPIO44	GPIO43	GPIO42	GPIO41	GPIO40	GPIO39	GPIO38	GPIO37	GPIO36	GPIO35	GPIO34	GPIO33	GPIO32
Type	WO	WO	WO	WO	WO	WO	WO	WO	WO	WO	WO	WO	WO	WO	WO	WO
Reset	0	0	0	0	0	0	0	0	0	0	0	0	0	0	0	0

Overview: For bitwise access of GPIO_DIR1

Bit(s)	Mnemonic	Name	Description
23	**GPIO55**	GPIO55_OUT	**Bitwise SET operation of GPIO55 data output value** 0: Keep 1: SET bits
22	**GPIO54**	GPIO54_OUT	**Bitwise SET operation of GPIO54 data output value** 0: Keep 1: SET bits
19	**GPIO51**	GPIO51_OUT	**Bitwise SET operation of GPIO51 data output value** 0: Keep 1: SET bits
18	**GPIO50**	GPIO50_OUT	**Bitwise SET operation of GPIO50 data output value** 0: Keep 1: SET bits
17	**GPIO49**	GPIO49_OUT	**Bitwise SET operation of GPIO49 data output value** 0: Keep 1: SET bits
16	**GPIO48**	GPIO48_OUT	**Bitwise SET operation of GPIO48 data output value** 0: Keep 1: SET bits
15	**GPIO47**	GPIO47_OUT	**Bitwise SET operation of GPIO47 data output value** 0: Keep 1: SET bits
14	**GPIO46**	GPIO46_OUT	**Bitwise SET operation of GPIO46 data output value** 0: Keep 1: SET bits
13	**GPIO45**	GPIO45_OUT	**Bitwise SET operation of GPIO45 data output value** 0: Keep 1: SET bits
12	**GPIO44**	GPIO44_OUT	**Bitwise SET operation of GPIO44 data output value** 0: Keep 1: SET bits
11	**GPIO43**	GPIO43_OUT	**Bitwise SET operation of GPIO43 data output value** 0: Keep 1: SET bits
10	**GPIO42**	GPIO42_OUT	**Bitwise SET operation of GPIO42 data output value** 0: Keep 1: SET bits
9	**GPIO41**	GPIO41_OUT	**Bitwise SET operation of GPIO41 data output value** 0: Keep 1: SET bits
8	**GPIO40**	GPIO40_OUT	**Bitwise SET operation of GPIO40 data output value** 0: Keep 1: SET bits
7	**GPIO39**	GPIO39_OUT	**Bitwise SET operation of GPIO39 data output value** 0: Keep 1: SET bits

This document contains information that is proprietary to MediaTek Inc.
Unauthorized reproduction or disclosure of this information in whole or in part is strictly prohibited.
MEDIATEK CONFIDENTIAL FOR dengzhenli@ far-sightedmobile.com USE ONLY

Bit(s)	Mnemonic	Name	Description
6	**GPIO38**	GPIO38_OUT	**Bitwise SET operation of GPIO38 data output value** 0: Keep 1: SET bits
5	**GPIO37**	GPIO37_OUT	**Bitwise SET operation of GPIO37 data output value** 0: Keep 1: SET bits
4	**GPIO36**	GPIO36_OUT	**Bitwise SET operation of GPIO36 data output value** 0: Keep 1: SET bits
3	**GPIO35**	GPIO35_OUT	**Bitwise SET operation of GPIO35 data output value** 0: Keep 1: SET bits
2	**GPIO34**	GPIO34_OUT	**Bitwise SET operation of GPIO34 data output value** 0: Keep 1: SET bits
1	**GPIO33**	GPIO33_OUT	**Bitwise SET operation of GPIO33 data output value** 0: Keep 1: SET bits
0	**GPIO32**	GPIO32_OUT	**Bitwise SET operation of GPIO32 data output value** 0: Keep 1: SET bits

A0020318 **GPIO_DOUT1_CLR** **GPIO Output Data Control** **00000000**

Bit	31	30	29	28	27	26	25	24	23	22	21	20	19	18	17	16
Name									**GPIO55**	**GPIO54**			**GPIO51**	**GPIO50**	**GPIO49**	**GPIO48**
Type									WO	WO			WO	WO	WO	WO
Reset									0	0			0	0	0	0
Bit	15	14	13	12	11	10	9	8	7	6	5	4	3	2	1	0
Name	**GPIO47**	**GPIO46**	**GPIO45**	**GPIO44**	**GPIO43**	**GPIO42**	**GPIO41**	**GPIO40**	**GPIO39**	**GPIO38**	**GPIO37**	**GPIO36**	**GPIO35**	**GPIO34**	**GPIO33**	**GPIO32**
Type	WO	WO	WO	WO	WO	WO	WO	WO	WO	WO	WO	WO	WO	WO	WO	WO
Reset	0	0	0	0	0	0	0	0	0	0	0	0	0	0	0	0

Overview: For bitwise access of GPIO_DIR1

Bit(s)	Mnemonic	Name	Description
23	**GPIO55**	GPIO55_OUT	**Bitwise CLR operation of GPIO55 data output value** 0: Keep 1: CLR bits
22	**GPIO54**	GPIO54_OUT	**Bitwise CLR operation of GPIO54 data output value** 0: Keep 1: CLR bits
19	**GPIO51**	GPIO51_OUT	**Bitwise CLR operation of GPIO51 data output value** 0: Keep 1: CLR bits
18	**GPIO50**	GPIO50_OUT	**Bitwise CLR operation of GPIO50 data output value** 0: Keep 1: CLR bits
17	**GPIO49**	GPIO49_OUT	**Bitwise CLR operation of GPIO49 data output value**

This document contains information that is proprietary to MediaTek Inc.
Unauthorized reproduction or disclosure of this information in whole or in part is strictly prohibited.
MEDIATEK CONFIDENTIAL FOR dengzhenli@fae.sightedmobile.com USE ONLY

Bit(s)	Mnemonic	Name	Description
			0: Keep 1: CLR bits
16	**GPIO48**	GPIO48_OUT	**Bitwise CLR operation of GPIO48 data output value** 0: Keep 1: CLR bits
15	**GPIO47**	GPIO47_OUT	**Bitwise CLR operation of GPIO47 data output value** 0: Keep 1: CLR bits
14	**GPIO46**	GPIO46_OUT	**Bitwise CLR operation of GPIO46 data output value** 0: Keep 1: CLR bits
13	**GPIO45**	GPIO45_OUT	**Bitwise CLR operation of GPIO45 data output value** 0: Keep 1: CLR bits
12	**GPIO44**	GPIO44_OUT	**Bitwise CLR operation of GPIO44 data output value** 0: Keep 1: CLR bits
11	**GPIO43**	GPIO43_OUT	**Bitwise CLR operation of GPIO43 data output value** 0: Keep 1: CLR bits
10	**GPIO42**	GPIO42_OUT	**Bitwise CLR operation of GPIO42 data output value** 0: Keep 1: CLR bits
9	**GPIO41**	GPIO41_OUT	**Bitwise CLR operation of GPIO41 data output value** 0: Keep 1: CLR bits
8	**GPIO40**	GPIO40_OUT	**Bitwise CLR operation of GPIO40 data output value** 0: Keep 1: CLR bits
7	**GPIO39**	GPIO39_OUT	**Bitwise CLR operation of GPIO39 data output value** 0: Keep 1: CLR bits
6	**GPIO38**	GPIO38_OUT	**Bitwise CLR operation of GPIO38 data output value** 0: Keep 1: CLR bits
5	**GPIO37**	GPIO37_OUT	**Bitwise CLR operation of GPIO37 data output value** 0: Keep 1: CLR bits
4	**GPIO36**	GPIO36_OUT	**Bitwise CLR operation of GPIO36 data output value** 0: Keep 1: CLR bits
3	**GPIO35**	GPIO35_OUT	**Bitwise CLR operation of GPIO35 data output value** 0: Keep 1: CLR bits
2	**GPIO34**	GPIO34_OUT	**Bitwise CLR operation of GPIO34 data output value** 0: Keep 1: CLR bits
1	**GPIO33**	GPIO33_OUT	**Bitwise CLR operation of GPIO33 data output value** 0: Keep 1: CLR bits
0	**GPIO32**	GPIO32_OUT	**Bitwise CLR operation of GPIO32 data output value** 0: Keep

This document contains information that is proprietary to MediaTek Inc.
Unauthorized reproduction or disclosure of this information in whole or in part is strictly prohibited.
MEDIATEK CONFIDENTIAL FOR dengzhenj@far-rightedmobile.com USE ONLY

Bit(s)	Mnemonic	Name	Description
			1: CLR bits

A0020400 GPIO_DIN0 GPIO Input Data Value 00000000

Bit	31	30	29	28	27	26	25	24	23	22	21	20	19	18	17	16
Name	GPIO31	GPIO30	GPIO29	GPIO28	GPIO27	GPIO26	GPIO25	GPIO24	GPIO23	GPIO22	GPIO21	GPIO20	GPIO19	GPIO18	GPIO17	GPIO16
Type	RO	RO	RO	RO	RO	RO	RO	RO	RO	RO	RO	RO	RO	RO	RO	RO
Reset	0	0	0	0	0	0	0	0	0	0	0	0	0	0	0	0
Bit	15	14	13	12	11	10	9	8	7	6	5	4	3	2	1	0
Name	GPIO15	GPIO14	GPIO13	GPIO12	GPIO11	GPIO10	GPIO9	GPIO8	GPIO7	GPIO6	GPIO5	GPIO4	GPIO3	GPIO2	GPIO1	GPIO0
Type	RO	RO	RO	RO	RO	RO	RO	RO	RO	RO	RO	RO	RO	RO	RO	RO
Reset	0	0	0	0	0	0	0	0	0	0	0	0	0	0	0	0

Overview: Reads GPIO input value

Bit(s)	Mnemonic	Name	Description
31	**GPIO31**	GPIO31_DIN	GPIO31 data input value
30	**GPIO30**	GPIO30_DIN	GPIO30 data input value
29	**GPIO29**	GPIO29_DIN	GPIO29 data input value
28	**GPIO28**	GPIO28_DIN	GPIO28 data input value
27	**GPIO27**	GPIO27_DIN	GPIO27 data input value
26	**GPIO26**	GPIO26_DIN	GPIO26 data input value
25	**GPIO25**	GPIO25_DIN	GPIO25 data input value
24	**GPIO24**	GPIO24_DIN	GPIO24 data input value
23	**GPIO23**	GPIO23_DIN	GPIO23 data input value
22	**GPIO22**	GPIO22_DIN	GPIO22 data input value
21	**GPIO21**	GPIO21_DIN	GPIO21 data input value
20	**GPIO20**	GPIO20_DIN	GPIO20 data input value
19	**GPIO19**	GPIO19_DIN	GPIO19 data input value
18	**GPIO18**	GPIO18_DIN	GPIO18 data input value
17	**GPIO17**	GPIO17_DIN	GPIO17 data input value
16	**GPIO16**	GPIO16_DIN	GPIO16 data input value
15	**GPIO15**	GPIO15_DIN	GPIO15 data input value
14	**GPIO14**	GPIO14_DIN	GPIO14 data input value
13	**GPIO13**	GPIO13_DIN	GPIO13 data input value
12	**GPIO12**	GPIO12_DIN	GPIO12 data input value
11	**GPIO11**	GPIO11_DIN	GPIO11 data input value
10	**GPIO10**	GPIO10_DIN	GPIO10 data input value
9	**GPIO9**	GPIO9_DIN	GPIO9 data input value
8	**GPIO8**	GPIO8_DIN	GPIO8 data input value
7	**GPIO7**	GPIO7_DIN	GPIO7 data input value
6	**GPIO6**	GPIO6_DIN	GPIO6 data input value
5	**GPIO5**	GPIO5_DIN	GPIO5 data input value
4	**GPIO4**	GPIO4_DIN	GPIO4 data input value
3	**GPIO3**	GPIO3_DIN	GPIO3 data input value

This document contains information that is proprietary to MediaTek Inc.
Unauthorized reproduction or disclosure of this information in whole or in part is strictly prohibited.

Bit(s)	Mnemonic	Name	Description
2	**GPIO2**	GPIO2_DIN	GPIO2 data input value
1	**GPIO1**	GPIO1_DIN	GPIO1 data input value
0	**GPIO0**	GPIO0_DIN	GPIO0 data input value

A0020410 GPIO_DIN1 GPIO Input Data Value 00000000

Bit	31	30	29	28	27	26	25	24	23	22	21	20	19	18	17	16
Name									**GPIO55**	**GPIO54**	**GPIO53**	**GPIO52**	**GPIO51**	**GPIO50**	**GPIO49**	**GPIO48**
Type									RO	RO	RO	RO	RO	RO	RO	RO
Reset									0	0	0	0	0	0	0	0
Bit	15	14	13	12	11	10	9	8	7	6	5	4	3	2	1	0
Name	**GPIO47**	**GPIO46**	**GPIO45**	**GPIO44**	**GPIO43**	**GPIO42**	**GPIO41**	**GPIO40**	**GPIO39**	**GPIO38**	**GPIO37**	**GPIO36**	**GPIO35**	**GPIO34**	**GPIO33**	**GPIO32**
Type	RO	RO	RO	RO	RO	RO	RO	RO	RO	RO	RO	RO	RO	RO	RO	RO
Reset	0	0	0	0	0	0	0	0	0	0	0	0	0	0	0	0

Overview: Reads GPIO input value

Bit(s)	Mnemonic	Name	Description
23	**GPIO55**	GPIO55_DIN	GPIO55 data input value
22	**GPIO54**	GPIO54_DIN	GPIO54 data input value
21	**GPIO53**	GPIO53_DIN	GPIO53 data input value
20	**GPIO52**	GPIO52_DIN	GPIO52 data input value
19	**GPIO51**	GPIO51_DIN	GPIO51 data input value
18	**GPIO50**	GPIO50_DIN	GPIO50 data input value
17	**GPIO49**	GPIO49_DIN	GPIO49 data input value
16	**GPIO48**	GPIO48_DIN	GPIO48 data input value
15	**GPIO47**	GPIO47_DIN	GPIO47 data input value
14	**GPIO46**	GPIO46_DIN	GPIO46 data input value
13	**GPIO45**	GPIO45_DIN	GPIO45 data input value
12	**GPIO44**	GPIO44_DIN	GPIO44 data input value
11	**GPIO43**	GPIO43_DIN	GPIO43 data input value
10	**GPIO42**	GPIO42_DIN	GPIO42 data input value
9	**GPIO41**	GPIO41_DIN	GPIO41 data input value
8	**GPIO40**	GPIO40_DIN	GPIO40 data input value
7	**GPIO39**	GPIO39_DIN	GPIO39 data input value
6	**GPIO38**	GPIO38_DIN	GPIO38 data input value
5	**GPIO37**	GPIO37_DIN	GPIO37 data input value
4	**GPIO36**	GPIO36_DIN	GPIO36 data input value
3	**GPIO35**	GPIO35_DIN	GPIO35 data input value
2	**GPIO34**	GPIO34_DIN	GPIO34 data input value
1	**GPIO33**	GPIO33_DIN	GPIO33 data input value
0	**GPIO32**	GPIO32_DIN	GPIO32 data input value

This document contains information that is proprietary to MediaTek Inc.
Unauthorized reproduction or disclosure of this information in whole or in part is strictly prohibited.
MEDIATEK CONFIDENTIAL FOR dengzhenie@ farsightedmobile.com USE ONLY

A0020500 **GPIO_PULLSEL0** **GPIO Pullsel Control** **00000000**

Bit	31	30	29	28	27	26	25	24	23	22	21	20	19	18	17	16
Name		**GPIO30**					**GPIO25**	**GPIO24**	**GPIO23**	**GPIO22**						
Type		RW					RW	RW	RW	RW						
Reset		0					0	0	0	0						
Bit	15	14	13	12	11	10	9	8	7	6	5	4	3	2	1	0
Name					**GPIO11**		**GPIO9**	**GPIO8**	**GPIO7**	**GPIO6**	**GPIO5**	**GPIO4**	**GPIO3**	**GPIO2**	**GPIO1**	**GPIO0**
Type					RW		RW	RW	RW	RW	RW	RW	RW	RW	RW	RW
Reset					0		0	0	0	0	0	0	0	0	0	0

Overview: Configures GPIO PUPD selection

Bit(s)	Mnemonic	Name	Description
30	**GPIO30**	GPIO30_PULLSEL	**GPIO30 PULLSEL** 0: Pull down 1: Pull up
25	**GPIO25**	GPIO25_PULLSEL	**GPIO25 PULLSEL** 0: Pull down 1: Pull up
24	**GPIO24**	GPIO24_PULLSEL	**GPIO24 PULLSEL** 0: Pull down 1: Pull up
23	**GPIO23**	GPIO23_PULLSEL	**GPIO23 PULLSEL** 0: Pull down 1: Pull up
22	**GPIO22**	GPIO22_PULLSEL	**GPIO22 PULLSEL** 0: Pull down 1: Pull up
11	**GPIO11**	GPIO11_PULLSEL	**GPIO11 PULLSEL** 0: Pull down 1: Pull up
9	**GPIO9**	GPIO9_PULLSEL	**GPIO9 PULLSEL** 0: Pull down 1: Pull up
8	**GPIO8**	GPIO8_PULLSEL	**GPIO8 PULLSEL** 0: Pull down 1: Pull up
7	**GPIO7**	GPIO7_PULLSEL	**GPIO7 PULLSEL** 0: Pull down 1: Pull up
6	**GPIO6**	GPIO6_PULLSEL	**GPIO6 PULLSEL** 0: Pull down 1: Pull up
5	**GPIO5**	GPIO5_PULLSEL	**GPIO5 PULLSEL** 0: Pull down 1: Pull up
4	**GPIO4**	GPIO4_PULLSEL	**GPIO4 PULLSEL** 0: Pull down 1: Pull up
3	**GPIO3**	GPIO3_PULLSEL	**GPIO3 PULLSEL**

This document contains information that is proprietary to MediaTek Inc.
Unauthorized reproduction or disclosure of this information in whole or in part is strictly prohibited.

Bit(s)	Mnemonic	Name	Description
			0: Pull down 1: Pull up
2	**GPIO2**	GPIO2_PULLSEL	**GPIO2 PULLSEL** 0: Pull down 1: Pull up
1	**GPIO1**	GPIO1_PULLSEL	**GPIO1 PULLSEL** 0: Pull down 1: Pull up
0	**GPIO0**	GPIO0_PULLSEL	**GPIO0 PULLSEL** 0: Pull down 1: Pull up

A0020504 **GPIO_PULLSEL0_SET** **GPIO Pullsel Control** **00000000**

Bit	31	30	29	28	27	26	25	24	23	22	21	20	19	18	17	16
Name		GPIO30					GPIO25	GPIO24	GPIO23	GPIO22						
Type		WO					WO	WO	WO	WO						
Reset		0					0	0	0	0						
Bit	15	14	13	12	11	10	9	8	7	6	5	4	3	2	1	0
Name					GPIO11		GPIO9	GPIO8	GPIO7	GPIO6	GPIO5	GPIO4	GPIO3	GPIO2	GPIO1	GPIO0
Type					WO		WO	WO	WO	WO	WO	WO	WO	WO	WO	WO
Reset					0		0	0	0	0	0	0	0	0	0	0

Overview: For bitwise access of GPIO_PULLSEL0

Bit(s)	Mnemonic	Name	Description
30	**GPIO30**	GPIO30_PULLSEL	**Bitwise SET operation of GPIO30 PULLSEL_SET** 0: Keep 1: SET bits
25	**GPIO25**	GPIO25_PULLSEL	**Bitwise SET operation of GPIO25 PULLSEL_SET** 0: Keep 1: SET bits
24	**GPIO24**	GPIO24_PULLSEL	**Bitwise SET operation of GPIO24 PULLSEL_SET** 0: Keep 1: SET bits
23	**GPIO23**	GPIO23_PULLSEL	**Bitwise SET operation of GPIO23 PULLSEL_SET** 0: Keep 1: SET bits
22	**GPIO22**	GPIO22_PULLSEL	**Bitwise SET operation of GPIO22 PULLSEL_SET** 0: Keep 1: SET bits
11	**GPIO11**	GPIO11_PULLSEL	**Bitwise SET operation of GPIO11 PULLSEL_SET** 0: Keep 1: SET bits
9	**GPIO9**	GPIO9_PULLSEL	**Bitwise SET operation of GPIO9 PULLSEL_SET** 0: Keep 1: SET bits
8	**GPIO8**	GPIO8_PULLSEL	**Bitwise SET operation of GPIO8 PULLSEL_SET** 0: Keep

This document contains information that is proprietary to MediaTek Inc.
Unauthorized reproduction or disclosure of this information in whole or in part is strictly prohibited.

MEDIATEK CONFIDENTIAL
FOR dengzhenli@fairsightmobile.com USE ONLY

Bit(s)	Mnemonic	Name	Description
			1: SET bits
7	**GPIO7**	GPIO7_PULLSEL	**Bitwise SET operation of GPIO7 PULLSEL_SET** 0: Keep 1: SET bits
6	**GPIO6**	GPIO6_PULLSEL	**Bitwise SET operation of GPIO6 PULLSEL_SET** 0: Keep 1: SET bits
5	**GPIO5**	GPIO5_PULLSEL	**Bitwise SET operation of GPIO5 PULLSEL_SET** 0: Keep 1: SET bits
4	**GPIO4**	GPIO4_PULLSEL	**Bitwise SET operation of GPIO4 PULLSEL_SET** 0: Keep 1: SET bits
3	**GPIO3**	GPIO3_PULLSEL	**Bitwise SET operation of GPIO3 PULLSEL_SET** 0: Keep 1: SET bits
2	**GPIO2**	GPIO2_PULLSEL	**Bitwise SET operation of GPIO2 PULLSEL_SET** 0: Keep 1: SET bits
1	**GPIO1**	GPIO1_PULLSEL	**Bitwise SET operation of GPIO1 PULLSEL_SET** 0: Keep 1: SET bits
0	**GPIO0**	GPIO0_PULLSEL	**Bitwise SET operation of GPIO0 PULLSEL_SET** 0: Keep 1: SET bits

A0020508 **GPIO_PULLSEL0_CLR** **GPIO Pullsel Control** **00000000**

Bit	31	30	29	28	27	26	25	24	23	22	21	20	19	18	17	16
Name		**GPIO30**					**GPIO25**	**GPIO24**	**GPIO23**	**GPIO22**						
Type		WO					WO	WO	WO	WO						
Reset		0					0	0	0	0						
Bit	15	14	13	12	11	10	9	8	7	6	5	4	3	2	1	0
Name					**GPIO11**		**GPIO9**	**GPIO8**	**GPIO7**	**GPIO6**	**GPIO5**	**GPIO4**	**GPIO3**	**GPIO2**	**GPIO1**	**GPIO0**
Type					WO		WO	WO	WO	WO	WO	WO	WO	WO	WO	WO
Reset					0		0	0	0	0	0	0	0	0	0	0

Overview: For bitwise access of GPIO_PULLSEL0

Bit(s)	Mnemonic	Name	Description
30	**GPIO30**	GPIO30_PULLSEL	**Bitwise CKR operation of GPIO30 PULLSEL_CLR** 0: Keep 1: CLR bits
25	**GPIO25**	GPIO25_PULLSEL	**Bitwise CKR operation of GPIO25 PULLSEL_CLR** 0: Keep 1: CLR bits
24	**GPIO24**	GPIO24_PULLSEL	**Bitwise CKR operation of GPIO24 PULLSEL_CLR** 0: Keep 1: CLR bits

This document contains information that is proprietary to MediaTek Inc.
Unauthorized reproduction or disclosure of this information in whole or in part is strictly prohibited.

Bit(s)	Mnemonic	Name	Description
23	**GPIO23**	GPIO23_PULLSEL	**Bitwise CKR operation of GPIO23 PULLSEL_CLR** 0: Keep 1: CLR bits
22	**GPIO22**	GPIO22_PULLSEL	**Bitwise CKR operation of GPIO22 PULLSEL_CLR** 0: Keep 1: CLR bits
11	**GPIO11**	GPIO11_PULLSEL	**Bitwise CKR operation of GPIO11 PULLSEL_CLR** 0: Keep 1: CLR bits
9	**GPIO9**	GPIO9_PULLSEL	**Bitwise CKR operation of GPIO9 PULLSEL_CLR** 0: Keep 1: CLR bits
8	**GPIO8**	GPIO8_PULLSEL	**Bitwise CKR operation of GPIO8 PULLSEL_CLR** 0: Keep 1: CLR bits
7	**GPIO7**	GPIO7_PULLSEL	**Bitwise CKR operation of GPIO7 PULLSEL_CLR** 0: Keep 1: CLR bits
6	**GPIO6**	GPIO6_PULLSEL	**Bitwise CKR operation of GPIO6 PULLSEL_CLR** 0: Keep 1: CLR bits
5	**GPIO5**	GPIO5_PULLSEL	**Bitwise CKR operation of GPIO5 PULLSEL_CLR** 0: Keep 1: CLR bits
4	**GPIO4**	GPIO4_PULLSEL	**Bitwise CKR operation of GPIO4 PULLSEL_CLR** 0: Keep 1: CLR bits
3	**GPIO3**	GPIO3_PULLSEL	**Bitwise CKR operation of GPIO3 PULLSEL_CLR** 0: Keep 1: CLR bits
2	**GPIO2**	GPIO2_PULLSEL	**Bitwise CKR operation of GPIO2 PULLSEL_CLR** 0: Keep 1: CLR bits
1	**GPIO1**	GPIO1_PULLSEL	**Bitwise CKR operation of GPIO1 PULLSEL_CLR** 0: Keep 1: CLR bits
0	**GPIO0**	GPIO0_PULLSEL	**Bitwise CKR operation of GPIO0 PULLSEL_CLR** 0: Keep 1: CLR bits

A0020510 **GPIO_PULLSEL1** **GPIO Pullsel Control** **00000000**

Bit	31	30	29	28	27	26	25	24	23	22	21	20	19	18	17	16
Name									**GPIO55**	**GPIO54**	**GPIO53**	**GPIO52**				
Type									RW	RW	RW	RW				
Reset									0	0	0	0				
Bit	15	14	13	12	11	10	9	8	7	6	5	4	3	2	1	0
Name				**GPIO44**	**GPIO43**											
Type				RW	RW											

This document contains information that is proprietary to MediaTek Inc.
Unauthorized reproduction or disclosure of this information in whole or in part is strictly prohibited.
MEDIATEK CONFIDENTIAL
FOR dengzhenli@farsightedmobile.com USE ONLY

Reset				0	0											

Overview: Configures GPIO PUPD selection

Bit(s)	Mnemonic	Name	Description
23	**GPIO55**	GPIO55_PULLSEL	**GPIO55 PULLSEL** 0: Pull down 1: Pull up
22	**GPIO54**	GPIO54_PULLSEL	**GPIO54 PULLSEL** 0: Pull down 1: Pull up
21	**GPIO53**	GPIO53_PULLSEL	**GPIO53 PULLSEL** 0: Pull down 1: Pull up
20	**GPIO52**	GPIO52_PULLSEL	**GPIO52 PULLSEL** 0: Pull down 1: Pull up
12	**GPIO44**	GPIO44_PULLSEL	**GPIO44 PULLSEL** 0: Pull down 1: Pull up
11	**GPIO43**	GPIO43_PULLSEL	**GPIO43 PULLSEL** 0: Pull down 1: Pull up

A0020514 **GPIO_PULLSEL1_SET** **GPIO Pullsel Control** **00000000**

Bit	31	30	29	28	27	26	25	24	23	22	21	20	19	18	17	16
Name									GPIO55	GPIO54	GPIO53	GPIO52				
Type									WO	WO	WO	WO				
Reset									0	0	0	0				
Bit	15	14	13	12	11	10	9	8	7	6	5	4	3	2	1	0
Name				GPIO44	GPIO43											
Type				WO	WO											
Reset				0	0											

Overview: For bitwise access of GPIO_PULLSEL1

Bit(s)	Mnemonic	Name	Description
23	**GPIO55**	GPIO55_PULLSEL	**Bitwise SET operation of GPIO55 PULLSEL_SET** 0: Keep 1: SET bits
22	**GPIO54**	GPIO54_PULLSEL	**Bitwise SET operation of GPIO54 PULLSEL_SET** 0: Keep 1: SET bits
21	**GPIO53**	GPIO53_PULLSEL	**Bitwise SET operation of GPIO53 PULLSEL_SET** 0: Keep 1: SET bits
20	**GPIO52**	GPIO52_PULLSEL	**Bitwise SET operation of GPIO52 PULLSEL_SET** 0: Keep

This document contains information that is proprietary to MediaTek Inc.
Unauthorized reproduction or disclosure of this information in whole or in part is strictly prohibited.

Bit(s)	Mnemonic	Name	Description
			1: SET bits
12	**GPIO44**	GPIO44_PULLSEL	**Bitwise SET operation of GPIO44 PULLSEL_SET** 0: Keep 1: SET bits
11	**GPIO43**	GPIO43_PULLSEL	**Bitwise SET operation of GPIO43 PULLSEL_SET** 0: Keep 1: SET bits

A0020518 **GPIO_PULLSEL1_CLR** **GPIO Pullsel Control** **00000000**

Bit	31	30	29	28	27	26	25	24	23	22	21	20	19	18	17	16
Name									**GPIO55**	**GPIO54**	**GPIO53**	**GPIO52**				
Type									WO	WO	WO	WO				
Reset									0	0	0	0				
Bit	15	14	13	12	11	10	9	8	7	6	5	4	3	2	1	0
Name				**GPIO44**	**GPIO43**											
Type				WO	WO											
Reset				0	0											

Overview: For bitwise access of GPIO_PULLSEL1

Bit(s)	Mnemonic	Name	Description
23	**GPIO55**	GPIO55_PULLSEL	**Bitwise CKR operation of GPIO55 PULLSEL_CLR** 0: Keep 1: CLR bits
22	**GPIO54**	GPIO54_PULLSEL	**Bitwise CKR operation of GPIO54 PULLSEL_CLR** 0: Keep 1: CLR bits
21	**GPIO53**	GPIO53_PULLSEL	**Bitwise CKR operation of GPIO53 PULLSEL_CLR** 0: Keep 1: CLR bits
20	**GPIO52**	GPIO52_PULLSEL	**Bitwise CKR operation of GPIO52 PULLSEL_CLR** 0: Keep 1: CLR bits
12	**GPIO44**	GPIO44_PULLSEL	**Bitwise CKR operation of GPIO44 PULLSEL_CLR** 0: Keep 1: CLR bits
11	**GPIO43**	GPIO43_PULLSEL	**Bitwise CKR operation of GPIO43 PULLSEL_CLR** 0: Keep 1: CLR bits

A0020600 **GPIO_SMT0** **GPIO SMT Control** **00000000**

Bit	31	30	29	28	27	26	25	24	23	22	21	20	19	18	17	16
Name	**GPIO31**	**GPIO30**	**GPIO29**	**GPIO28**	**GPIO27**	**GPIO26**	**GPIO25**	**GPIO24**	**GPIO23**	**GPIO22**	**GPIO21**	**GPIO20**	**GPIO19**	**GPIO18**	**GPIO17**	**GPIO16**
Type	RW	RW	RW	RW	RW	RW	RW	RW	RW	RW	RW	RW	RW	RW	RW	RW
Reset	0	0	0	0	0	0	0	0	0	0	0	0	0	0	0	0

This document contains information that is proprietary to MediaTek Inc.
Unauthorized reproduction or disclosure of this information in whole or in part is strictly prohibited.

Bit	15	14	13	12	11	10	9	8	7	6	5	4	3	2	1	0
Name	GPIO15	GPIO14	GPIO13	GPIO12	GPIO11	GPIO10	GPIO9	GPIO8	GPIO7	GPIO6	GPIO5	GPIO4	GPIO3	GPIO2	GPIO1	GPIO0
Type	RW	RW	RW	RW	RW	RW	RW	RW	RW	RW	RW	RW	RW	RW	RW	RW
Reset	0	0	0	0	0	0	0	0	0	0	0	0	0	0	0	0

Overview: Configures GPIO Schmit trigger control

Bit(s)	Mnemonic	Name	Description
31	**GPIO31**	GPIO31_SMT	**SMT for GPIO31** 0: Disable 1: Enable
30	**GPIO30**	GPIO30_SMT	**SMT for GPIO30** 0: Disable 1: Enable
29	**GPIO29**	GPIO29_SMT	**SMT for GPIO29** 0: Disable 1: Enable
28	**GPIO28**	GPIO28_SMT	**SMT for GPIO28** 0: Disable 1: Enable
27	**GPIO27**	GPIO27_SMT	**SMT for GPIO27** 0: Disable 1: Enable
26	**GPIO26**	GPIO26_SMT	**SMT for GPIO26** 0: Disable 1: Enable
25	**GPIO25**	GPIO25_SMT	**SMT for GPIO25** 0: Disable 1: Enable
24	**GPIO24**	GPIO24_SMT	**SMT for GPIO24** 0: Disable 1: Enable
23	**GPIO23**	GPIO23_SMT	**SMT for GPIO23** 0: Disable 1: Enable
22	**GPIO22**	GPIO22_SMT	**SMT for GPIO22** 0: Disable 1: Enable
21	**GPIO21**	GPIO21_SMT	**SMT for GPIO21** 0: Disable 1: Enable
20	**GPIO20**	GPIO20_SMT	**SMT for GPIO20** 0: Disable 1: Enable
19	**GPIO19**	GPIO19_SMT	**SMT for GPIO19** 0: Disable 1: Enable
18	**GPIO18**	GPIO18_SMT	**SMT for GPIO18** 0: Disable 1: Enable
17	**GPIO17**	GPIO17_SMT	**SMT for GPIO17** 0: Disable

MEDIATEK CONFIDENTIAL FOR dengzhenli@fan-signtedmobile.com USE ONLY

This document contains information that is proprietary to MediaTek Inc.
Unauthorized reproduction or disclosure of this information in whole or in part is strictly prohibited.

Bit(s)	Mnemonic	Name	Description
			1: Enable
16	**GPIO16**	GPIO16_SMT	**SMT for GPIO16** 0: Disable 1: Enable
15	**GPIO15**	GPIO15_SMT	**SMT for GPIO15** 0: Disable 1: Enable
14	**GPIO14**	GPIO14_SMT	**SMT for GPIO14** 0: Disable 1: Enable
13	**GPIO13**	GPIO13_SMT	**SMT for GPIO13** 0: Disable 1: Enable
12	**GPIO12**	GPIO12_SMT	**SMT for GPIO12** 0: Disable 1: Enable
11	**GPIO11**	GPIO11_SMT	**SMT for GPIO11** 0: Disable 1: Enable
10	**GPIO10**	GPIO10_SMT	**SMT for GPIO10** 0: Disable 1: Enable
9	**GPIO9**	GPIO9_SMT	**SMT for GPIO9** 0: Disable 1: Enable
8	**GPIO8**	GPIO8_SMT	**SMT for GPIO8** 0: Disable 1: Enable
7	**GPIO7**	GPIO7_SMT	**SMT for GPIO7** 0: Disable 1: Enable
6	**GPIO6**	GPIO6_SMT	**SMT for GPIO6** 0: Disable 1: Enable
5	**GPIO5**	GPIO5_SMT	**SMT for GPIO5** 0: Disable 1: Enable
4	**GPIO4**	GPIO4_SMT	**SMT for GPIO4** 0: Disable 1: Enable
3	**GPIO3**	GPIO3_SMT	**SMT for GPIO3** 0: Disable 1: Enable
2	**GPIO2**	GPIO2_SMT	**SMT for GPIO2** 0: Disable 1: Enable
1	**GPIO1**	GPIO1_SMT	**SMT for GPIO1** 0: Disable 1: Enable
0	**GPIO0**	GPIO0_SMT	**SMT for GPIO0** 0: Disable 1: Enable

This document contains information that is proprietary to MediaTek Inc.
Unauthorized reproduction or disclosure of this information in whole or in part is strictly prohibited.
MEDIATEK CONFIDENTIAL FOR dengzheni@ farsightedmobile.com USE ONLY

A0020604 **GPIO_SMT0_SET** **GPIO SMT Control** **00000000**

Bit	31	30	29	28	27	26	25	24	23	22	21	20	19	18	17	16
Name	GPIO31	GPIO30	GPIO29	GPIO28	GPIO27	GPIO26	GPIO25	GPIO24	GPIO23	GPIO22	GPIO21	GPIO20	GPIO19	GPIO18	GPIO17	GPIO16
Type	WO	WO	WO	WO	WO	WO	WO	WO	WO	WO	WO	WO	WO	WO	WO	WO
Reset	0	0	0	0	0	0	0	0	0	0	0	0	0	0	0	0
Bit	15	14	13	12	11	10	9	8	7	6	5	4	3	2	1	0
Name	GPIO15	GPIO14	GPIO13	GPIO12	GPIO11	GPIO10	GPIO9	GPIO8	GPIO7	GPIO6	GPIO5	GPIO4	GPIO3	GPIO2	GPIO1	GPIO0
Type	WO	WO	WO	WO	WO	WO	WO	WO	WO	WO	WO	WO	WO	WO	WO	WO
Reset	0	0	0	0	0	0	0	0	0	0	0	0	0	0	0	0

Overview: For bitwise access of GPIO_SMT0

Bit(s)	Mnemonic	Name	Description
31	**GPIO31**	GPIO31_SMT	**Bitwise SET operation of GPIO31 SMT** 0: Keep 1: SET bits
30	**GPIO30**	GPIO30_SMT	**Bitwise SET operation of GPIO30 SMT** 0: Keep 1: SET bits
29	**GPIO29**	GPIO29_SMT	**Bitwise SET operation of GPIO29 SMT** 0: Keep 1: SET bits
28	**GPIO28**	GPIO28_SMT	**Bitwise SET operation of GPIO28 SMT** 0: Keep 1: SET bits
27	**GPIO27**	GPIO27_SMT	**Bitwise SET operation of GPIO27 SMT** 0: Keep 1: SET bits
26	**GPIO26**	GPIO26_SMT	**Bitwise SET operation of GPIO26 SMT** 0: Keep 1: SET bits
25	**GPIO25**	GPIO25_SMT	**Bitwise SET operation of GPIO25 SMT** 0: Keep 1: SET bits
24	**GPIO24**	GPIO24_SMT	**Bitwise SET operation of GPIO24 SMT** 0: Keep 1: SET bits
23	**GPIO23**	GPIO23_SMT	**Bitwise SET operation of GPIO23 SMT** 0: Keep 1: SET bits
22	**GPIO22**	GPIO22_SMT	**Bitwise SET operation of GPIO22 SMT** 0: Keep 1: SET bits
21	**GPIO21**	GPIO21_SMT	**Bitwise SET operation of GPIO21 SMT** 0: Keep 1: SET bits
20	**GPIO20**	GPIO20_SMT	**Bitwise SET operation of GPIO20 SMT** 0: Keep

This document contains information that is proprietary to MediaTek Inc.
Unauthorized reproduction or disclosure of this information in whole or in part is strictly prohibited.

Bit(s)	Mnemonic	Name	Description
			1: SET bits
19	**GPIO19**	GPIO19_SMT	**Bitwise SET operation of GPIO19 SMT** 0: Keep 1: SET bits
18	**GPIO18**	GPIO18_SMT	**Bitwise SET operation of GPIO18 SMT** 0: Keep 1: SET bits
17	**GPIO17**	GPIO17_SMT	**Bitwise SET operation of GPIO17 SMT** 0: Keep 1: SET bits
16	**GPIO16**	GPIO16_SMT	**Bitwise SET operation of GPIO16 SMT** 0: Keep 1: SET bits
15	**GPIO15**	GPIO15_SMT	**Bitwise SET operation of GPIO15 SMT** 0: Keep 1: SET bits
14	**GPIO14**	GPIO14_SMT	**Bitwise SET operation of GPIO14 SMT** 0: Keep 1: SET bits
13	**GPIO13**	GPIO13_SMT	**Bitwise SET operation of GPIO13 SMT** 0: Keep 1: SET bits
12	**GPIO12**	GPIO12_SMT	**Bitwise SET operation of GPIO12 SMT** 0: Keep 1: SET bits
11	**GPIO11**	GPIO11_SMT	**Bitwise SET operation of GPIO11 SMT** 0: Keep 1: SET bits
10	**GPIO10**	GPIO10_SMT	**Bitwise SET operation of GPIO10 SMT** 0: Keep 1: SET bits
9	**GPIO9**	GPIO9_SMT	**Bitwise SET operation of GPIO9 SMT** 0: Keep 1: SET bits
8	**GPIO8**	GPIO8_SMT	**Bitwise SET operation of GPIO8 SMT** 0: Keep 1: SET bits
7	**GPIO7**	GPIO7_SMT	**Bitwise SET operation of GPIO7 SMT** 0: Keep 1: SET bits
6	**GPIO6**	GPIO6_SMT	**Bitwise SET operation of GPIO6 SMT** 0: Keep 1: SET bits
5	**GPIO5**	GPIO5_SMT	**Bitwise SET operation of GPIO5 SMT** 0: Keep 1: SET bits
4	**GPIO4**	GPIO4_SMT	**Bitwise SET operation of GPIO4 SMT** 0: Keep 1: SET bits
3	**GPIO3**	GPIO3_SMT	**Bitwise SET operation of GPIO3 SMT** 0: Keep 1: SET bits

This document contains information that is proprietary to MediaTek Inc.
Unauthorized reproduction or disclosure of this information in whole or in part is strictly prohibited.
MEDIATEK CONFIDENTIAL FOR dengzhenli@ fargightedmobile.com USE ONLY

Bit(s)	Mnemonic	Name	Description
2	**GPIO2**	GPIO2_SMT	**Bitwise SET operation of GPIO2 SMT** 0: Keep 1: SET bits
1	**GPIO1**	GPIO1_SMT	**Bitwise SET operation of GPIO1 SMT** 0: Keep 1: SET bits
0	**GPIO0**	GPIO0_SMT	**Bitwise SET operation of GPIO0 SMT** 0: Keep 1: SET bits

A0020608 **GPIO_SMT0_CLR** **GPIO SMT Control** **00000000**

Bit	31	30	29	28	27	26	25	24	23	22	21	20	19	18	17	16
Name	**GPIO31**	**GPIO30**	**GPIO29**	**GPIO28**	**GPIO27**	**GPIO26**	**GPIO25**	**GPIO24**	**GPIO23**	**GPIO22**	**GPIO21**	**GPIO20**	**GPIO19**	**GPIO18**	**GPIO17**	**GPIO16**
Type	WO	WO	WO	WO	WO	WO	WO	WO	WO	WO	WO	WO	WO	WO	WO	WO
Reset	0	0	0	0	0	0	0	0	0	0	0	0	0	0	0	0
Bit	15	14	13	12	11	10	9	8	7	6	5	4	3	2	1	0
Name	**GPIO15**	**GPIO14**	**GPIO13**	**GPIO12**	**GPIO11**	**GPIO10**	**GPIO9**	**GPIO8**	**GPIO7**	**GPIO6**	**GPIO5**	**GPIO4**	**GPIO3**	**GPIO2**	**GPIO1**	**GPIO0**
Type	WO	WO	WO	WO	WO	WO	WO	WO	WO	WO	WO	WO	WO	WO	WO	WO
Reset	0	0	0	0	0	0	0	0	0	0	0	0	0	0	0	0

Overview: For bitwise access of GPIO_SMT0

Bit(s)	Mnemonic	Name	Description
31	**GPIO31**	GPIO31_SMT	**Bitwise CLR operation of GPIO31 SMT** 0: Keep 1: CLR bits
30	**GPIO30**	GPIO30_SMT	**Bitwise CLR operation of GPIO30 SMT** 0: Keep 1: CLR bits
29	**GPIO29**	GPIO29_SMT	**Bitwise CLR operation of GPIO29 SMT** 0: Keep 1: CLR bits
28	**GPIO28**	GPIO28_SMT	**Bitwise CLR operation of GPIO28 SMT** 0: Keep 1: CLR bits
27	**GPIO27**	GPIO27_SMT	**Bitwise CLR operation of GPIO27 SMT** 0: Keep 1: CLR bits
26	**GPIO26**	GPIO26_SMT	**Bitwise CLR operation of GPIO26 SMT** 0: Keep 1: CLR bits
25	**GPIO25**	GPIO25_SMT	**Bitwise CLR operation of GPIO25 SMT** 0: Keep 1: CLR bits
24	**GPIO24**	GPIO24_SMT	**Bitwise CLR operation of GPIO24 SMT** 0: Keep 1: CLR bits
23	**GPIO23**	GPIO23_SMT	**Bitwise CLR operation of GPIO23 SMT**

This document contains information that is proprietary to MediaTek Inc.
Unauthorized reproduction or disclosure of this information in whole or in part is strictly prohibited.

Bit(s)	Mnemonic	Name	Description
			0: Keep 1: CLR bits
22	**GPIO22**	GPIO22_SMT	**Bitwise CLR operation of GPIO22 SMT** 0: Keep 1: CLR bits
21	**GPIO21**	GPIO21_SMT	**Bitwise CLR operation of GPIO21 SMT** 0: Keep 1: CLR bits
20	**GPIO20**	GPIO20_SMT	**Bitwise CLR operation of GPIO20 SMT** 0: Keep 1: CLR bits
19	**GPIO19**	GPIO19_SMT	**Bitwise CLR operation of GPIO19 SMT** 0: Keep 1: CLR bits
18	**GPIO18**	GPIO18_SMT	**Bitwise CLR operation of GPIO18 SMT** 0: Keep 1: CLR bits
17	**GPIO17**	GPIO17_SMT	**Bitwise CLR operation of GPIO17 SMT** 0: Keep 1: CLR bits
16	**GPIO16**	GPIO16_SMT	**Bitwise CLR operation of GPIO16 SMT** 0: Keep 1: CLR bits
15	**GPIO15**	GPIO15_SMT	**Bitwise CLR operation of GPIO15 SMT** 0: Keep 1: CLR bits
14	**GPIO14**	GPIO14_SMT	**Bitwise CLR operation of GPIO14 SMT** 0: Keep 1: CLR bits
13	**GPIO13**	GPIO13_SMT	**Bitwise CLR operation of GPIO13 SMT** 0: Keep 1: CLR bits
12	**GPIO12**	GPIO12_SMT	**Bitwise CLR operation of GPIO12 SMT** 0: Keep 1: CLR bits
11	**GPIO11**	GPIO11_SMT	**Bitwise CLR operation of GPIO11 SMT** 0: Keep 1: CLR bits
10	**GPIO10**	GPIO10_SMT	**Bitwise CLR operation of GPIO10 SMT** 0: Keep 1: CLR bits
9	**GPIO9**	GPIO9_SMT	**Bitwise CLR operation of GPIO9 SMT** 0: Keep 1: CLR bits
8	**GPIO8**	GPIO8_SMT	**Bitwise CLR operation of GPIO8 SMT** 0: Keep 1: CLR bits
7	**GPIO7**	GPIO7_SMT	**Bitwise CLR operation of GPIO7 SMT** 0: Keep 1: CLR bits
6	**GPIO6**	GPIO6_SMT	**Bitwise CLR operation of GPIO6 SMT** 0: Keep

This document contains information that is proprietary to MediaTek Inc.
Unauthorized reproduction or disclosure of this information in whole or in part is strictly prohibited.
MEDIATEK CONFIDENTIAL FOR dengzheni@ fartightedmobile.com USE ONLY

Bit(s)	Mnemonic	Name	Description
			1: CLR bits
5	**GPIO5**	GPIO5_SMT	**Bitwise CLR operation of GPIO5 SMT** 0: Keep 1: CLR bits
4	**GPIO4**	GPIO4_SMT	**Bitwise CLR operation of GPIO4 SMT** 0: Keep 1: CLR bits
3	**GPIO3**	GPIO3_SMT	**Bitwise CLR operation of GPIO3 SMT** 0: Keep 1: CLR bits
2	**GPIO2**	GPIO2_SMT	**Bitwise CLR operation of GPIO2 SMT** 0: Keep 1: CLR bits
1	**GPIO1**	GPIO1_SMT	**Bitwise CLR operation of GPIO1 SMT** 0: Keep 1: CLR bits
0	**GPIO0**	GPIO0_SMT	**Bitwise CLR operation of GPIO0 SMT** 0: Keep 1: CLR bits

A0020610 **GPIO_SMT1** **GPIO SMT Control** **00000000**

Bit	31	30	29	28	27	26	25	24	23	22	21	20	19	18	17	16
Name													**GPIO51**	**GPIO50**	**GPIO49**	**GPIO48**
Type													RW	RW	RW	RW
Reset													0	0	0	0
Bit	15	14	13	12	11	10	9	8	7	6	5	4	3	2	1	0
Name	**GPIO47**	**GPIO46**	**GPIO45**	**GPIO44**	**GPIO43**	**GPIO42**	**GPIO41**	**GPIO40**	**GPIO39**	**GPIO38**	**GPIO37**	**GPIO36**	**GPIO35**	**GPIO34**	**GPIO33**	**GPIO32**
Type	RW	RW	RW	RW	RW	RW	RW	RW	RW	RW	RW	RW	RW	RW	RW	RW
Reset	0	0	0	0	0	0	0	0	0	0	0	0	0	0	0	0

Overview: Configures GPIO Schmit trigger control

Bit(s)	Mnemonic	Name	Description
19	**GPIO51**	GPIO51_SMT	**SMT for GPIO51** 0: Disable 1: Enable
18	**GPIO50**	GPIO50_SMT	**SMT for GPIO50** 0: Disable 1: Enable
17	**GPIO49**	GPIO49_SMT	**SMT for GPIO49** 0: Disable 1: Enable
16	**GPIO48**	GPIO48_SMT	**SMT for GPIO48** 0: Disable 1: Enable
15	**GPIO47**	GPIO47_SMT	**SMT for GPIO47** 0: Disable 1: Enable
14	**GPIO46**	GPIO46_SMT	**SMT for GPIO46**

This document contains information that is proprietary to MediaTek Inc.
Unauthorized reproduction or disclosure of this information in whole or in part is strictly prohibited.

Bit(s)	Mnemonic	Name	Description
			0: Disable 1: Enable
13	**GPIO45**	GPIO45_SMT	**SMT for GPIO45** 0: Disable 1: Enable
12	**GPIO44**	GPIO44_SMT	**SMT for GPIO44** 0: Disable 1: Enable
11	**GPIO43**	GPIO43_SMT	**SMT for GPIO43** 0: Disable 1: Enable
10	**GPIO42**	GPIO42_SMT	**SMT for GPIO42** 0: Disable 1: Enable
9	**GPIO41**	GPIO41_SMT	**SMT for GPIO41** 0: Disable 1: Enable
8	**GPIO40**	GPIO40_SMT	**SMT for GPIO40** 0: Disable 1: Enable
7	**GPIO39**	GPIO39_SMT	**SMT for GPIO39** 0: Disable 1: Enable
6	**GPIO38**	GPIO38_SMT	**SMT for GPIO38** 0: Disable 1: Enable
5	**GPIO37**	GPIO37_SMT	**SMT for GPIO37** 0: Disable 1: Enable
4	**GPIO36**	GPIO36_SMT	**SMT for GPIO36** 0: Disable 1: Enable
3	**GPIO35**	GPIO35_SMT	**SMT for GPIO35** 0: Disable 1: Enable
2	**GPIO34**	GPIO34_SMT	**SMT for GPIO34** 0: Disable 1: Enable
1	**GPIO33**	GPIO33_SMT	**SMT for GPIO33** 0: Disable 1: Enable
0	**GPIO32**	GPIO32_SMT	**SMT for GPIO32** 0: Disable 1: Enable

A0020614 **GPIO_SMT1_SET** **GPIO SMT Control** **00000000**

Bit	31	30	29	28	27	26	25	24	23	22	21	20	19	18	17	16
Name													**GPIO51**	**GPIO50**	**GPIO49**	**GPIO48**
Type													WO	WO	WO	WO

This document contains information that is proprietary to MediaTek Inc.
Unauthorized reproduction or disclosure of this information in whole or in part is strictly prohibited.
MEDIATEK CONFIDENTIAL FOR dengzheni@ fartsightedmobile.com USE ONLY

Reset													0	0	0	0
Bit	15	14	13	12	11	10	9	8	7	6	5	4	3	2	1	0
Name	**GPIO47**	**GPIO46**	**GPIO45**	**GPIO44**	**GPIO43**	**GPIO42**	**GPIO41**	**GPIO40**	**GPIO39**	**GPIO38**	**GPIO37**	**GPIO36**	**GPIO35**	**GPIO34**	**GPIO33**	**GPIO32**
Type	WO	WO	WO	WO	WO	WO	WO	WO	WO	WO	WO	WO	WO	WO	WO	WO
Reset	0	0	0	0	0	0	0	0	0	0	0	0	0	0	0	0

Overview: For bitwise access of GPIO_SMT1

Bit(s)	Mnemonic	Name	Description
19	**GPIO51**	GPIO51_SMT	**Bitwise SET operation of GPIO51 SMT** 0: Keep 1: SET bits
18	**GPIO50**	GPIO50_SMT	**Bitwise SET operation of GPIO50 SMT** 0: Keep 1: SET bits
17	**GPIO49**	GPIO49_SMT	**Bitwise SET operation of GPIO49 SMT** 0: Keep 1: SET bits
16	**GPIO48**	GPIO48_SMT	**Bitwise SET operation of GPIO48 SMT** 0: Keep 1: SET bits
15	**GPIO47**	GPIO47_SMT	**Bitwise SET operation of GPIO47 SMT** 0: Keep 1: SET bits
14	**GPIO46**	GPIO46_SMT	**Bitwise SET operation of GPIO46 SMT** 0: Keep 1: SET bits
13	**GPIO45**	GPIO45_SMT	**Bitwise SET operation of GPIO45 SMT** 0: Keep 1: SET bits
12	**GPIO44**	GPIO44_SMT	**Bitwise SET operation of GPIO44 SMT** 0: Keep 1: SET bits
11	**GPIO43**	GPIO43_SMT	**Bitwise SET operation of GPIO43 SMT** 0: Keep 1: SET bits
10	**GPIO42**	GPIO42_SMT	**Bitwise SET operation of GPIO42 SMT** 0: Keep 1: SET bits
9	**GPIO41**	GPIO41_SMT	**Bitwise SET operation of GPIO41 SMT** 0: Keep 1: SET bits
8	**GPIO40**	GPIO40_SMT	**Bitwise SET operation of GPIO40 SMT** 0: Keep 1: SET bits
7	**GPIO39**	GPIO39_SMT	**Bitwise SET operation of GPIO39 SMT** 0: Keep 1: SET bits
6	**GPIO38**	GPIO38_SMT	**Bitwise SET operation of GPIO38 SMT** 0: Keep 1: SET bits
5	**GPIO37**	GPIO37_SMT	**Bitwise SET operation of GPIO37 SMT**

This document contains information that is proprietary to MediaTek Inc.
Unauthorized reproduction or disclosure of this information in whole or in part is strictly prohibited.
MEDIATEK CONFIDENTIAL FOR dengzhenli@farsightedmobile.com USE ONLY

Bit(s)	Mnemonic	Name	Description
			0: Keep 1: SET bits
4	**GPIO36**	GPIO36_SMT	**Bitwise SET operation of GPIO36 SMT** 0: Keep 1: SET bits
3	**GPIO35**	GPIO35_SMT	**Bitwise SET operation of GPIO35 SMT** 0: Keep 1: SET bits
2	**GPIO34**	GPIO34_SMT	**Bitwise SET operation of GPIO34 SMT** 0: Keep 1: SET bits
1	**GPIO33**	GPIO33_SMT	**Bitwise SET operation of GPIO33 SMT** 0: Keep 1: SET bits
0	**GPIO32**	GPIO32_SMT	**Bitwise SET operation of GPIO32 SMT** 0: Keep 1: SET bits

A0020618 **GPIO_SMT1_CLR** **GPIO SMT Control** **00000000**

Bit	31	30	29	28	27	26	25	24	23	22	21	20	19	18	17	16
Name													GPIO51	GPIO50	GPIO49	GPIO48
Type													WO	WO	WO	WO
Reset													0	0	0	0
Bit	15	14	13	12	11	10	9	8	7	6	5	4	3	2	1	0
Name	GPIO47	GPIO46	GPIO45	GPIO44	GPIO43	GPIO42	GPIO41	GPIO40	GPIO39	GPIO38	GPIO37	GPIO36	GPIO35	GPIO34	GPIO33	GPIO32
Type	WO	WO	WO	WO	WO	WO	WO	WO	WO	WO	WO	WO	WO	WO	WO	WO
Reset	0	0	0	0	0	0	0	0	0	0	0	0	0	0	0	0

Overview: For bitwise access of GPIO_SMT1

Bit(s)	Mnemonic	Name	Description
19	**GPIO51**	GPIO51_SMT	**Bitwise CLR operation of GPIO51 SMT** 0: Keep 1: CLR bits
18	**GPIO50**	GPIO50_SMT	**Bitwise CLR operation of GPIO50 SMT** 0: Keep 1: CLR bits
17	**GPIO49**	GPIO49_SMT	**Bitwise CLR operation of GPIO49 SMT** 0: Keep 1: CLR bits
16	**GPIO48**	GPIO48_SMT	**Bitwise CLR operation of GPIO48 SMT** 0: Keep 1: CLR bits
15	**GPIO47**	GPIO47_SMT	**Bitwise CLR operation of GPIO47 SMT** 0: Keep 1: CLR bits
14	**GPIO46**	GPIO46_SMT	**Bitwise CLR operation of GPIO46 SMT** 0: Keep

This document contains information that is proprietary to MediaTek Inc.
Unauthorized reproduction or disclosure of this information in whole or in part is strictly prohibited.
MEDIATEK CONFIDENTIAL FOR dengzhenli@far-sightedmobile.com USE ONLY

Bit(s)	Mnemonic	Name	Description
			1: CLR bits
13	**GPIO45**	GPIO45_SMT	**Bitwise CLR operation of GPIO45 SMT** 0: Keep 1: CLR bits
12	**GPIO44**	GPIO44_SMT	**Bitwise CLR operation of GPIO44 SMT** 0: Keep 1: CLR bits
11	**GPIO43**	GPIO43_SMT	**Bitwise CLR operation of GPIO43 SMT** 0: Keep 1: CLR bits
10	**GPIO42**	GPIO42_SMT	**Bitwise CLR operation of GPIO42 SMT** 0: Keep 1: CLR bits
9	**GPIO41**	GPIO41_SMT	**Bitwise CLR operation of GPIO41 SMT** 0: Keep 1: CLR bits
8	**GPIO40**	GPIO40_SMT	**Bitwise CLR operation of GPIO40 SMT** 0: Keep 1: CLR bits
7	**GPIO39**	GPIO39_SMT	**Bitwise CLR operation of GPIO39 SMT** 0: Keep 1: CLR bits
6	**GPIO38**	GPIO38_SMT	**Bitwise CLR operation of GPIO38 SMT** 0: Keep 1: CLR bits
5	**GPIO37**	GPIO37_SMT	**Bitwise CLR operation of GPIO37 SMT** 0: Keep 1: CLR bits
4	**GPIO36**	GPIO36_SMT	**Bitwise CLR operation of GPIO36 SMT** 0: Keep 1: CLR bits
3	**GPIO35**	GPIO35_SMT	**Bitwise CLR operation of GPIO35 SMT** 0: Keep 1: CLR bits
2	**GPIO34**	GPIO34_SMT	**Bitwise CLR operation of GPIO34 SMT** 0: Keep 1: CLR bits
1	**GPIO33**	GPIO33_SMT	**Bitwise CLR operation of GPIO33 SMT** 0: Keep 1: CLR bits
0	**GPIO32**	GPIO32_SMT	**Bitwise CLR operation of GPIO32 SMT** 0: Keep 1: CLR bits

A0020700 GPIO_SR0 GPIO SR Control FFFFFFFF

Bit	31	30	29	28	27	26	25	24	23	22	21	20	19	18	17	16
Name	GPIO31	GPIO30	GPIO29	GPIO28	GPIO27	GPIO26	GPIO25	GPIO24	GPIO23	GPIO22	GPIO21	GPIO20	GPIO19	GPIO18	GPIO17	GPIO16
Type	RW	RW	RW	RW	RW	RW	RW	RW	RW	RW	RW	RW	RW	RW	RW	RW
Reset	1	1	1	1	1	1	1	1	1	1	1	1	1	1	1	1
Bit	15	14	13	12	11	10	9	8	7	6	5	4	3	2	1	0

This document contains information that is proprietary to MediaTek Inc.
Unauthorized reproduction or disclosure of this information in whole or in part is strictly prohibited.
MEDIATEK CONFIDENTIAL FOR denli@ fartightedmobile.com USE ONLY

Name	GPIO15	GPIO14	GPIO13	GPIO12	GPIO11	GPIO10	GPIO9	GPIO8	GPIO7	GPIO6	GPIO5	GPIO4	GPIO3	GPIO2	GPIO1	GPIO0
Type	RW	RW	RW	RW	RW	RW	RW	RW	RW	RW	RW	RW	RW	RW	RW	RW
Reset	1	1	1	1	1	1	1	1	1	1	1	1	1	1	1	1

Overview: Configures GPIO slew rate control

Bit(s)	Mnemonic	Name	Description
31	**GPIO31**	GPIO31_SR	**SR for GPIO31** 0: Disable 1: Enable
30	**GPIO30**	GPIO30_SR	**SR for GPIO30** 0: Disable 1: Enable
29	**GPIO29**	GPIO29_SR	**SR for GPIO29** 0: Disable 1: Enable
28	**GPIO28**	GPIO28_SR	**SR for GPIO28** 0: Disable 1: Enable
27	**GPIO27**	GPIO27_SR	**SR for GPIO27** 0: Disable 1: Enable
26	**GPIO26**	GPIO26_SR	**SR for GPIO26** 0: Disable 1: Enable
25	**GPIO25**	GPIO25_SR	**SR for GPIO25** 0: Disable 1: Enable
24	**GPIO24**	GPIO24_SR	**SR for GPIO24** 0: Disable 1: Enable
23	**GPIO23**	GPIO23_SR	**SR for GPIO23** 0: Disable 1: Enable
22	**GPIO22**	GPIO22_SR	**SR for GPIO22** 0: Disable 1: Enable
21	**GPIO21**	GPIO21_SR	**SR for GPIO21** 0: Disable 1: Enable
20	**GPIO20**	GPIO20_SR	**SR for GPIO20** 0: Disable 1: Enable
19	**GPIO19**	GPIO19_SR	**SR for GPIO19** 0: Disable 1: Enable
18	**GPIO18**	GPIO18_SR	**SR for GPIO18** 0: Disable 1: Enable
17	**GPIO17**	GPIO17_SR	**SR for GPIO17** 0: Disable 1: Enable

This document contains information that is proprietary to MediaTek Inc.
Unauthorized reproduction or disclosure of this information in whole or in part is strictly prohibited.

MEDIATEK CONFIDENTIAL FOR dengzhenli@ far-sightedmobile.com USE ONLY

Bit(s)	Mnemonic	Name	Description
16	**GPIO16**	GPIO16_SR	**SR for GPIO16** 0: Disable 1: Enable
15	**GPIO15**	GPIO15_SR	**SR for GPIO15** 0: Disable 1: Enable
14	**GPIO14**	GPIO14_SR	**SR for GPIO14** 0: Disable 1: Enable
13	**GPIO13**	GPIO13_SR	**SR for GPIO13** 0: Disable 1: Enable
12	**GPIO12**	GPIO12_SR	**SR for GPIO12** 0: Disable 1: Enable
11	**GPIO11**	GPIO11_SR	**SR for GPIO11** 0: Disable 1: Enable
10	**GPIO10**	GPIO10_SR	**SR for GPIO10** 0: Disable 1: Enable
9	**GPIO9**	GPIO9_SR	**SR for GPIO9** 0: Disable 1: Enable
8	**GPIO8**	GPIO8_SR	**SR for GPIO8** 0: Disable 1: Enable
7	**GPIO7**	GPIO7_SR	**SR for GPIO7** 0: Disable 1: Enable
6	**GPIO6**	GPIO6_SR	**SR for GPIO6** 0: Disable 1: Enable
5	**GPIO5**	GPIO5_SR	**SR for GPIO5** 0: Disable 1: Enable
4	**GPIO4**	GPIO4_SR	**SR for GPIO4** 0: Disable 1: Enable
3	**GPIO3**	GPIO3_SR	**SR for GPIO3** 0: Disable 1: Enable
2	**GPIO2**	GPIO2_SR	**SR for GPIO2** 0: Disable 1: Enable
1	**GPIO1**	GPIO1_SR	**SR for GPIO1** 0: Disable 1: Enable
0	**GPIO0**	GPIO0_SR	**SR for GPIO0** 0: Disable 1: Enable

This document contains information that is proprietary to MediaTek Inc.
Unauthorized reproduction or disclosure of this information in whole or in part is strictly prohibited.
MEDIATEK CONFIDENTIAL FOR dengzhenli@ farsightedmobile.com USE ONLY

A0020704 GPIO_SR0_SET GPIO SR Control **00000000**

Bit	31	30	29	28	27	26	25	24	23	22	21	20	19	18	17	16
Name	GPIO31	GPIO30	GPIO29	GPIO28	GPIO27	GPIO26	GPIO25	GPIO24	GPIO23	GPIO22	GPIO21	GPIO20	GPIO19	GPIO18	GPIO17	GPIO16
Type	WO	WO	WO	WO	WO	WO	WO	WO	WO	WO	WO	WO	WO	WO	WO	WO
Reset	0	0	0	0	0	0	0	0	0	0	0	0	0	0	0	0
Bit	15	14	13	12	11	10	9	8	7	6	5	4	3	2	1	0
Name	GPIO15	GPIO14	GPIO13	GPIO12	GPIO11	GPIO10	GPIO9	GPIO8	GPIO7	GPIO6	GPIO5	GPIO4	GPIO3	GPIO2	GPIO1	GPIO0
Type	WO	WO	WO	WO	WO	WO	WO	WO	WO	WO	WO	WO	WO	WO	WO	WO
Reset	0	0	0	0	0	0	0	0	0	0	0	0	0	0	0	0

Overview: For bitwise access of GPIO_SR0

Bit(s)	Mnemonic	Name	Description
31	**GPIO31**	GPIO31_SR	**Bitwise SET operation of GPIO31 SR** 0: Keep 1: SET bits
30	**GPIO30**	GPIO30_SR	**Bitwise SET operation of GPIO30 SR** 0: Keep 1: SET bits
29	**GPIO29**	GPIO29_SR	**Bitwise SET operation of GPIO29 SR** 0: Keep 1: SET bits
28	**GPIO28**	GPIO28_SR	**Bitwise SET operation of GPIO28 SR** 0: Keep 1: SET bits
27	**GPIO27**	GPIO27_SR	**Bitwise SET operation of GPIO27 SR** 0: Keep 1: SET bits
26	**GPIO26**	GPIO26_SR	**Bitwise SET operation of GPIO26 SR** 0: Keep 1: SET bits
25	**GPIO25**	GPIO25_SR	**Bitwise SET operation of GPIO25 SR** 0: Keep 1: SET bits
24	**GPIO24**	GPIO24_SR	**Bitwise SET operation of GPIO24 SR** 0: Keep 1: SET bits
23	**GPIO23**	GPIO23_SR	**Bitwise SET operation of GPIO23 SR** 0: Keep 1: SET bits
22	**GPIO22**	GPIO22_SR	**Bitwise SET operation of GPIO22 SR** 0: Keep 1: SET bits
21	**GPIO21**	GPIO21_SR	**Bitwise SET operation of GPIO21 SR** 0: Keep 1: SET bits
20	**GPIO20**	GPIO20_SR	**Bitwise SET operation of GPIO20 SR** 0: Keep 1: SET bits
19	**GPIO19**	GPIO19_SR	**Bitwise SET operation of GPIO19 SR**

This document contains information that is proprietary to MediaTek Inc.
Unauthorized reproduction or disclosure of this information in whole or in part is strictly prohibited.
MEDIATEK CONFIDENTIAL FOR dengzhenli@ farsightedmobile.com USE ONLY

Bit(s)	Mnemonic	Name	Description
			0: Keep 1: SET bits
18	**GPIO18**	GPIO18_SR	**Bitwise SET operation of GPIO18 SR** 0: Keep 1: SET bits
17	**GPIO17**	GPIO17_SR	**Bitwise SET operation of GPIO17 SR** 0: Keep 1: SET bits
16	**GPIO16**	GPIO16_SR	**Bitwise SET operation of GPIO16 SR** 0: Keep 1: SET bits
15	**GPIO15**	GPIO15_SR	**Bitwise SET operation of GPIO15 SR** 0: Keep 1: SET bits
14	**GPIO14**	GPIO14_SR	**Bitwise SET operation of GPIO14 SR** 0: Keep 1: SET bits
13	**GPIO13**	GPIO13_SR	**Bitwise SET operation of GPIO13 SR** 0: Keep 1: SET bits
12	**GPIO12**	GPIO12_SR	**Bitwise SET operation of GPIO12 SR** 0: Keep 1: SET bits
11	**GPIO11**	GPIO11_SR	**Bitwise SET operation of GPIO11 SR** 0: Keep 1: SET bits
10	**GPIO10**	GPIO10_SR	**Bitwise SET operation of GPIO10 SR** 0: Keep 1: SET bits
9	**GPIO9**	GPIO9_SR	**Bitwise SET operation of GPIO9 SR** 0: Keep 1: SET bits
8	**GPIO8**	GPIO8_SR	**Bitwise SET operation of GPIO8 SR** 0: Keep 1: SET bits
7	**GPIO7**	GPIO7_SR	**Bitwise SET operation of GPIO7 SR** 0: Keep 1: SET bits
6	**GPIO6**	GPIO6_SR	**Bitwise SET operation of GPIO6 SR** 0: Keep 1: SET bits
5	**GPIO5**	GPIO5_SR	**Bitwise SET operation of GPIO5 SR** 0: Keep 1: SET bits
4	**GPIO4**	GPIO4_SR	**Bitwise SET operation of GPIO4 SR** 0: Keep 1: SET bits
3	**GPIO3**	GPIO3_SR	**Bitwise SET operation of GPIO3 SR** 0: Keep 1: SET bits
2	**GPIO2**	GPIO2_SR	**Bitwise SET operation of GPIO2 SR** 0: Keep

This document contains information that is proprietary to MediaTek Inc.
Unauthorized reproduction or disclosure of this information in whole or in part is strictly prohibited.
MEDIATEK CONFIDENTIAL FOR dengzhenni@ fan-lightedmobile.com USE ONLY

Bit(s)	Mnemonic	Name	Description
			1: SET bits
1	**GPIO1**	GPIO1_SR	**Bitwise SET operation of GPIO1 SR** 0: Keep 1: SET bits
0	**GPIO0**	GPIO0_SR	**Bitwise SET operation of GPIO0 SR** 0: Keep 1: SET bits

A0020708 GPIO_SR0_CLR GPIO SR Control 00000000

Bit	31	30	29	28	27	26	25	24	23	22	21	20	19	18	17	16
Name	GPIO31	GPIO30	GPIO29	GPIO28	GPIO27	GPIO26	GPIO25	GPIO24	GPIO23	GPIO22	GPIO21	GPIO20	GPIO19	GPIO18	GPIO17	GPIO16
Type	WO	WO	WO	WO	WO	WO	WO	WO	WO	WO	WO	WO	WO	WO	WO	WO
Reset	0	0	0	0	0	0	0	0	0	0	0	0	0	0	0	0
Bit	15	14	13	12	11	10	9	8	7	6	5	4	3	2	1	0
Name	GPIO15	GPIO14	GPIO13	GPIO12	GPIO11	GPIO10	GPIO9	GPIO8	GPIO7	GPIO6	GPIO5	GPIO4	GPIO3	GPIO2	GPIO1	GPIO0
Type	WO	WO	WO	WO	WO	WO	WO	WO	WO	WO	WO	WO	WO	WO	WO	WO
Reset	0	0	0	0	0	0	0	0	0	0	0	0	0	0	0	0

Overview: For bitwise access of GPIO_SR0

Bit(s)	Mnemonic	Name	Description
31	**GPIO31**	GPIO31_SR	**Bitwise CLR operation of GPIO31 SR** 0: Keep 1: CLR bits
30	**GPIO30**	GPIO30_SR	**Bitwise CLR operation of GPIO30 SR** 0: Keep 1: CLR bits
29	**GPIO29**	GPIO29_SR	**Bitwise CLR operation of GPIO29 SR** 0: Keep 1: CLR bits
28	**GPIO28**	GPIO28_SR	**Bitwise CLR operation of GPIO28 SR** 0: Keep 1: CLR bits
27	**GPIO27**	GPIO27_SR	**Bitwise CLR operation of GPIO27 SR** 0: Keep 1: CLR bits
26	**GPIO26**	GPIO26_SR	**Bitwise CLR operation of GPIO26 SR** 0: Keep 1: CLR bits
25	**GPIO25**	GPIO25_SR	**Bitwise CLR operation of GPIO25 SR** 0: Keep 1: CLR bits
24	**GPIO24**	GPIO24_SR	**Bitwise CLR operation of GPIO24 SR** 0: Keep 1: CLR bits
23	**GPIO23**	GPIO23_SR	**Bitwise CLR operation of GPIO23 SR** 0: Keep 1: CLR bits
22	**GPIO22**	GPIO22_SR	**Bitwise CLR operation of GPIO22 SR**

This document contains information that is proprietary to MediaTek Inc.
Unauthorized reproduction or disclosure of this information in whole or in part is strictly prohibited.
MEDIATEK CONFIDENTIAL FOR dengzhenli@ farsightedmobile.com USE ONLY

Bit(s)	Mnemonic	Name	Description
			0: Keep 1: CLR bits
21	**GPIO21**	GPIO21_SR	**Bitwise CLR operation of GPIO21 SR** 0: Keep 1: CLR bits
20	**GPIO20**	GPIO20_SR	**Bitwise CLR operation of GPIO20 SR** 0: Keep 1: CLR bits
19	**GPIO19**	GPIO19_SR	**Bitwise CLR operation of GPIO19 SR** 0: Keep 1: CLR bits
18	**GPIO18**	GPIO18_SR	**Bitwise CLR operation of GPIO18 SR** 0: Keep 1: CLR bits
17	**GPIO17**	GPIO17_SR	**Bitwise CLR operation of GPIO17 SR** 0: Keep 1: CLR bits
16	**GPIO16**	GPIO16_SR	**Bitwise CLR operation of GPIO16 SR** 0: Keep 1: CLR bits
15	**GPIO15**	GPIO15_SR	**Bitwise CLR operation of GPIO15 SR** 0: Keep 1: CLR bits
14	**GPIO14**	GPIO14_SR	**Bitwise CLR operation of GPIO14 SR** 0: Keep 1: CLR bits
13	**GPIO13**	GPIO13_SR	**Bitwise CLR operation of GPIO13 SR** 0: Keep 1: CLR bits
12	**GPIO12**	GPIO12_SR	**Bitwise CLR operation of GPIO12 SR** 0: Keep 1: CLR bits
11	**GPIO11**	GPIO11_SR	**Bitwise CLR operation of GPIO11 SR** 0: Keep 1: CLR bits
10	**GPIO10**	GPIO10_SR	**Bitwise CLR operation of GPIO10 SR** 0: Keep 1: CLR bits
9	**GPIO9**	GPIO9_SR	**Bitwise CLR operation of GPIO9 SR** 0: Keep 1: CLR bits
8	**GPIO8**	GPIO8_SR	**Bitwise CLR operation of GPIO8 SR** 0: Keep 1: CLR bits
7	**GPIO7**	GPIO7_SR	**Bitwise CLR operation of GPIO7 SR** 0: Keep 1: CLR bits
6	**GPIO6**	GPIO6_SR	**Bitwise CLR operation of GPIO6 SR** 0: Keep 1: CLR bits
5	**GPIO5**	GPIO5_SR	**Bitwise CLR operation of GPIO5 SR** 0: Keep

This document contains information that is proprietary to MediaTek Inc.
Unauthorized reproduction or disclosure of this information in whole or in part is strictly prohibited.
MEDIATEK CONFIDENTIAL FOR dengzhenj@ fae-rightedmobile.com USE ONLY

Bit(s)	Mnemonic	Name	Description
			1: CLR bits
4	**GPIO4**	GPIO4_SR	**Bitwise CLR operation of GPIO4 SR** 0: Keep 1: CLR bits
3	**GPIO3**	GPIO3_SR	**Bitwise CLR operation of GPIO3 SR** 0: Keep 1: CLR bits
2	**GPIO2**	GPIO2_SR	**Bitwise CLR operation of GPIO2 SR** 0: Keep 1: CLR bits
1	**GPIO1**	GPIO1_SR	**Bitwise CLR operation of GPIO1 SR** 0: Keep 1: CLR bits
0	**GPIO0**	GPIO0_SR	**Bitwise CLR operation of GPIO0 SR** 0: Keep 1: CLR bits

A0020710 **GPIO_SR1** **GPIO SR Control** **000FF81F**

Bit	31	30	29	28	27	26	25	24	23	22	21	20	19	18	17	16
Name													GPIO51	GPIO50	GPIO49	GPIO48
Type													RW	RW	RW	RW
Reset													1	1	1	1
Bit	15	14	13	12	11	10	9	8	7	6	5	4	3	2	1	0
Name	GPIO47	GPIO46	GPIO45	GPIO44	GPIO43							GPIO36	GPIO35	GPIO34	GPIO33	GPIO32
Type	RW	RW	RW	RW	RW							RW	RW	RW	RW	RW
Reset	1	1	1	1	1							1	1	1	1	1

Overview: Configures GPIO slew rate control

Bit(s)	Mnemonic	Name	Description
19	**GPIO51**	GPIO51_SR	**SR for GPIO51** 0: Disable 1: Enable
18	**GPIO50**	GPIO50_SR	**SR for GPIO50** 0: Disable 1: Enable
17	**GPIO49**	GPIO49_SR	**SR for GPIO49** 0: Disable 1: Enable
16	**GPIO48**	GPIO48_SR	**SR for GPIO48** 0: Disable 1: Enable
15	**GPIO47**	GPIO47_SR	**SR for GPIO47** 0: Disable 1: Enable
14	**GPIO46**	GPIO46_SR	**SR for GPIO46** 0: Disable 1: Enable
13	**GPIO45**	GPIO45_SR	**SR for GPIO45**

This document contains information that is proprietary to MediaTek Inc.
Unauthorized reproduction or disclosure of this information in whole or in part is strictly prohibited.
MEDIATEK CONFIDENTIAL FOR dengzhenli@ fan-sightmobile.com USE ONLY

Bit(s)	Mnemonic	Name	Description
			0: Disable 1: Enable
12	**GPIO44**	GPIO44_SR	**SR for GPIO44** 0: Disable 1: Enable
11	**GPIO43**	GPIO43_SR	**SR for GPIO43** 0: Disable 1: Enable
4	**GPIO36**	GPIO36_SR	**SR for GPIO36** 0: Disable 1: Enable
3	**GPIO35**	GPIO35_SR	**SR for GPIO35** 0: Disable 1: Enable
2	**GPIO34**	GPIO34_SR	**SR for GPIO34** 0: Disable 1: Enable
1	**GPIO33**	GPIO33_SR	**SR for GPIO33** 0: Disable 1: Enable
0	**GPIO32**	GPIO32_SR	**SR for GPIO32** 0: Disable 1: Enable

A0020714 GPIO_SR1_SET GPIO SR Control 00000000

Bit	31	30	29	28	27	26	25	24	23	22	21	20	19	18	17	16
Name													**GPIO51**	**GPIO50**	**GPIO49**	**GPIO48**
Type													WO	WO	WO	WO
Reset													0	0	0	0
Bit	15	14	13	12	11	10	9	8	7	6	5	4	3	2	1	0
Name	**GPIO47**	**GPIO46**	**GPIO45**	**GPIO44**	**GPIO43**							**GPIO36**	**GPIO35**	**GPIO34**	**GPIO33**	**GPIO32**
Type	WO	WO	WO	WO	WO							WO	WO	WO	WO	WO
Reset	0	0	0	0	0							0	0	0	0	0

Overview: For bitwise access of GPIO_SR1

Bit(s)	Mnemonic	Name	Description
19	**GPIO51**	GPIO51_SR	**Bitwise SET operation of GPIO51 SR** 0: Keep 1: SET bits
18	**GPIO50**	GPIO50_SR	**Bitwise SET operation of GPIO50 SR** 0: Keep 1: SET bits
17	**GPIO49**	GPIO49_SR	**Bitwise SET operation of GPIO49 SR** 0: Keep 1: SET bits
16	**GPIO48**	GPIO48_SR	**Bitwise SET operation of GPIO48 SR** 0: Keep 1: SET bits

MEDIATEK CONFIDENTIAL FOR dengzhenli@far-sightedmobile.com USE ONLY

This document contains information that is proprietary to MediaTek Inc.
Unauthorized reproduction or disclosure of this information in whole or in part is strictly prohibited.

Bit(s)	Mnemonic	Name	Description
15	**GPIO47**	GPIO47_SR	**Bitwise SET operation of GPIO47 SR** 0: Keep 1: SET bits
14	**GPIO46**	GPIO46_SR	**Bitwise SET operation of GPIO46 SR** 0: Keep 1: SET bits
13	**GPIO45**	GPIO45_SR	**Bitwise SET operation of GPIO45 SR** 0: Keep 1: SET bits
12	**GPIO44**	GPIO44_SR	**Bitwise SET operation of GPIO44 SR** 0: Keep 1: SET bits
11	**GPIO43**	GPIO43_SR	**Bitwise SET operation of GPIO43 SR** 0: Keep 1: SET bits
4	**GPIO36**	GPIO36_SR	**Bitwise SET operation of GPIO36 SR** 0: Keep 1: SET bits
3	**GPIO35**	GPIO35_SR	**Bitwise SET operation of GPIO35 SR** 0: Keep 1: SET bits
2	**GPIO34**	GPIO34_SR	**Bitwise SET operation of GPIO34 SR** 0: Keep 1: SET bits
1	**GPIO33**	GPIO33_SR	**Bitwise SET operation of GPIO33 SR** 0: Keep 1: SET bits
0	**GPIO32**	GPIO32_SR	**Bitwise SET operation of GPIO32 SR** 0: Keep 1: SET bits

A0020718 **GPIO_SR1_CLR GPIO SR Control** **00000000**

Bit	31	30	29	28	27	26	25	24	23	22	21	20	19	18	17	16
Name													**GPIO51**	**GPIO50**	**GPIO49**	**GPIO48**
Type													WO	WO	WO	WO
Reset													0	0	0	0
Bit	15	14	13	12	11	10	9	8	7	6	5	4	3	2	1	0
Name	**GPIO47**	**GPIO46**	**GPIO45**	**GPIO44**	**GPIO43**							**GPIO36**	**GPIO35**	**GPIO34**	**GPIO33**	**GPIO32**
Type	WO	WO	WO	WO	WO							WO	WO	WO	WO	WO
Reset	0	0	0	0	0							0	0	0	0	0

Overview: For bitwise access of GPIO_SR1

Bit(s)	Mnemonic	Name	Description
19	**GPIO51**	GPIO51_SR	**Bitwise CLR operation of GPIO51 SR** 0: Keep 1: CLR bits
18	**GPIO50**	GPIO50_SR	**Bitwise CLR operation of GPIO50 SR** 0: Keep

This document contains information that is proprietary to MediaTek Inc.
Unauthorized reproduction or disclosure of this information in whole or in part is strictly prohibited.
MEDIATEK CONFIDENTIAL FOR dengzhenli@far-sightedmobile.com USE ONLY

Bit(s)	Mnemonic	Name	Description
			1: CLR bits
17	**GPIO49**	GPIO49_SR	**Bitwise CLR operation of GPIO49 SR** 0: Keep 1: CLR bits
16	**GPIO48**	GPIO48_SR	**Bitwise CLR operation of GPIO48 SR** 0: Keep 1: CLR bits
15	**GPIO47**	GPIO47_SR	**Bitwise CLR operation of GPIO47 SR** 0: Keep 1: CLR bits
14	**GPIO46**	GPIO46_SR	**Bitwise CLR operation of GPIO46 SR** 0: Keep 1: CLR bits
13	**GPIO45**	GPIO45_SR	**Bitwise CLR operation of GPIO45 SR** 0: Keep 1: CLR bits
12	**GPIO44**	GPIO44_SR	**Bitwise CLR operation of GPIO44 SR** 0: Keep 1: CLR bits
11	**GPIO43**	GPIO43_SR	**Bitwise CLR operation of GPIO43 SR** 0: Keep 1: CLR bits
4	**GPIO36**	GPIO36_SR	**Bitwise CLR operation of GPIO36 SR** 0: Keep 1: CLR bits
3	**GPIO35**	GPIO35_SR	**Bitwise CLR operation of GPIO35 SR** 0: Keep 1: CLR bits
2	**GPIO34**	GPIO34_SR	**Bitwise CLR operation of GPIO34 SR** 0: Keep 1: CLR bits
1	**GPIO33**	GPIO33_SR	**Bitwise CLR operation of GPIO33 SR** 0: Keep 1: CLR bits
0	**GPIO32**	GPIO32_SR	**Bitwise CLR operation of GPIO32 SR** 0: Keep 1: CLR bits

A0020720 GPIO_SIM_SR GPIO SIM SR Control 003F003F

Bit	31	30	29	28	27	26	25	24	23	22	21	20	19	18	17	16
Name											**GPIO42**	**GPIO41**	**GPIO40**	**GPIO39**	**GPIO38**	**GPIO37**
Type											RW	RW	RW	RW	RW	RW
Reset											1	1	1	1	1	1
Bit	15	14	13	12	11	10	9	8	7	6	5	4	3	2	1	0
Name											**GPIO42**	**GPIO41**	**GPIO40**	**GPIO39**	**GPIO38**	**GPIO37**
Type											RW	RW	RW	RW	RW	RW
Reset											1	1	1	1	1	1

Overview: Configures GPIO slew rate control for SIM IO

This document contains information that is proprietary to MediaTek Inc.
Unauthorized reproduction or disclosure of this information in whole or in part is strictly prohibited.
MEDIATEK CONFIDENTIAL FOR dengzhen@ fariightedmobile.com USE ONLY

Bit(s)	Mnemonic	Name	Description
21	**GPIO42**	GPIO42_SR1	**SR1 control for GPIO42** 0: Disable 1: Enable
20	**GPIO41**	GPIO41_SR1	**SR1 control for GPIO41** 0: Disable 1: Enable
19	**GPIO40**	GPIO40_SR1	**SR1 control for GPIO40** 0: Disable 1: Enable
18	**GPIO39**	GPIO39_SR1	**SR1 control for GPIO39** 0: Disable 1: Enable
17	**GPIO38**	GPIO38_SR1	**SR1 control for GPIO38** 0: Disable 1: Enable
16	**GPIO37**	GPIO37_SR1	**SR1 control for GPIO37** 0: Disable 1: Enable
5	**GPIO42**	GPIO42_SR0	**SR0 control for GPIO42** 0: Disable 1: Enable
4	**GPIO41**	GPIO41_SR0	**SR0 control for GPIO41** 0: Disable 1: Enable
3	**GPIO40**	GPIO40_SR0	**SR0 control for GPIO40** 0: Disable 1: Enable
2	**GPIO39**	GPIO39_SR0	**SR0 control for GPIO39** 0: Disable 1: Enable
1	**GPIO38**	GPIO38_SR0	**SR0 control for GPIO38** 0: Disable 1: Enable
0	**GPIO37**	GPIO37_SR0	**SR0 control for GPIO37** 0: Disable 1: Enable

A0020724 **GPIO_SIM_SR_SET** **GPIO SIM SR Control** **00000000**

Bit	31	30	29	28	27	26	25	24	23	22	21	20	19	18	17	16
Name											**GPIO42**	**GPIO41**	**GPIO40**	**GPIO39**	**GPIO38**	**GPIO37**
Type											WO	WO	WO	WO	WO	WO
Reset											0	0	0	0	0	0
Bit	15	14	13	12	11	10	9	8	7	6	5	4	3	2	1	0
Name											**GPIO42**	**GPIO41**	**GPIO40**	**GPIO39**	**GPIO38**	**GPIO37**
Type											WO	WO	WO	WO	WO	WO
Reset											0	0	0	0	0	0

This document contains information that is proprietary to MediaTek Inc.
Unauthorized reproduction or disclosure of this information in whole or in part is strictly prohibited.
MEDIATEK CONFIDENTIAL FOR dengzhenli@ farsightedmobile.com USE ONLY

Overview: For bitwise access of GPIO_SIM_SR

Bit(s)	Mnemonic	Name	Description
21	**GPIO42**	GPIO42_SR1	**Bitwise SET operation of GPIO42 SR1 control** 0: Keep 1: SET bits
20	**GPIO41**	GPIO41_SR1	**Bitwise SET operation of GPIO41 SR1 control** 0: Keep 1: SET bits
19	**GPIO40**	GPIO40_SR1	**Bitwise SET operation of GPIO40 SR1 control** 0: Keep 1: SET bits
18	**GPIO39**	GPIO39_SR1	**Bitwise SET operation of GPIO39 SR1 control** 0: Keep 1: SET bits
17	**GPIO38**	GPIO38_SR1	**Bitwise SET operation of GPIO38 SR1 control** 0: Keep 1: SET bits
16	**GPIO37**	GPIO37_SR1	**Bitwise SET operation of GPIO37 SR1 control** 0: Keep 1: SET bits
5	**GPIO42**	GPIO42_SR0	**Bitwise SET operation of GPIO42 SR0 control** 0: Keep 1: SET bits
4	**GPIO41**	GPIO41_SR0	**Bitwise SET operation of GPIO41 SR0 control** 0: Keep 1: SET bits
3	**GPIO40**	GPIO40_SR0	**Bitwise SET operation of GPIO40 SR0 control** 0: Keep 1: SET bits
2	**GPIO39**	GPIO39_SR0	**Bitwise SET operation of GPIO39 SR0 control** 0: Keep 1: SET bits
1	**GPIO38**	GPIO38_SR0	**Bitwise SET operation of GPIO38 SR0 control** 0: Keep 1: SET bits
0	**GPIO37**	GPIO37_SR0	**Bitwise SET operation of GPIO37 SR0 control** 0: Keep 1: SET bits

A0020728 **GPIO_SIM_SR_CLR** **GPIO SIM SR Control** **00000000**

Bit	31	30	29	28	27	26	25	24	23	22	21	20	19	18	17	16
Name											GPIO42	GPIO41	GPIO40	GPIO39	GPIO38	GPIO37
Type											WO	WO	WO	WO	WO	WO
Reset											0	0	0	0	0	0
Bit	15	14	13	12	11	10	9	8	7	6	5	4	3	2	1	0
Name											GPIO42	GPIO41	GPIO40	GPIO39	GPIO38	GPIO37
Type											WO	WO	WO	WO	WO	WO
Reset											0	0	0	0	0	0

This document contains information that is proprietary to MediaTek Inc.
Unauthorized reproduction or disclosure of this information in whole or in part is strictly prohibited.
MEDIATEK CONFIDENTIAL FOR dengzhenni@ farsightedmobile.com USE ONLY

Overview: For bitwise access of GPIO_SIM_SR

Bit(s)	Mnemonic	Name	Description
21	**GPIO42**	GPIO42_SR1	**Bitwise CLR operation of GPIO42 SR1 control** 0: Keep 1: CLR bits
20	**GPIO41**	GPIO41_SR1	**Bitwise CLR operation of GPIO41 SR1 control** 0: Keep 1: CLR bits
19	**GPIO40**	GPIO40_SR1	**Bitwise CLR operation of GPIO40 SR1 control** 0: Keep 1: CLR bits
18	**GPIO39**	GPIO39_SR1	**Bitwise CLR operation of GPIO39 SR1 control** 0: Keep 1: CLR bits
17	**GPIO38**	GPIO38_SR1	**Bitwise CLR operation of GPIO38 SR1 control** 0: Keep 1: CLR bits
16	**GPIO37**	GPIO37_SR1	**Bitwise CLR operation of GPIO37 SR1 control** 0: Keep 1: CLR bits
5	**GPIO42**	GPIO42_SR0	**Bitwise CLR operation of GPIO42 SR0 control** 0: Keep 1: CLR bits
4	**GPIO41**	GPIO41_SR0	**Bitwise CLR operation of GPIO41 SR0 control** 0: Keep 1: CLR bits
3	**GPIO40**	GPIO40_SR0	**Bitwise CLR operation of GPIO40 SR0 control** 0: Keep 1: CLR bits
2	**GPIO39**	GPIO39_SR0	**Bitwise CLR operation of GPIO39 SR0 control** 0: Keep 1: CLR bits
1	**GPIO38**	GPIO38_SR0	**Bitwise CLR operation of GPIO38 SR0 control** 0: Keep 1: CLR bits
0	**GPIO37**	GPIO37_SR0	**Bitwise CLR operation of GPIO37 SR0 control** 0: Keep 1: CLR bits

A0020800 GPIO_DRV0 GPIO DRV Control 00000000

Bit	31	30	29	28	27	26	25	24	23	22	21	20	19	18	17	16
Name	DRV0[31:16]															
Type	RW															
Reset	0	0	0	0	0	0	0	0	0	0	0	0	0	0	0	0
Bit	15	14	13	12	11	10	9	8	7	6	5	4	3	2	1	0
Name	DRV0[15:0]															
Type	RW															
Reset	0	0	0	0	0	0	0	0	0	0	0	0	0	0	0	0

This document contains information that is proprietary to MediaTek Inc.
Unauthorized reproduction or disclosure of this information in whole or in part is strictly prohibited.
MEDIATEK CONFIDENTIAL FOR dengzhenli@ far-sightedmobile.com USE ONLY

Overview: Configures GPIO driving control

Bit(s)	Mnemonic	Name	Description
31:0		DRV0	**GPIO_DRV0** [1: 0]: GPIO_0 [3: 2]: GPIO_1 [5: 4]: GPIO_2 [7: 6]: GPIO_3 [9: 8]: GPIO_4 [11: 10]: GPIO_5 [13: 12]: GPIO_6 [15: 14]: GPIO_7 [17: 16]: GPIO_8 [19: 18]: GPIO_9 [21: 20]: URXD1 [21: 20]: UTXD1 [23: 22]: KCOL4 [25: 24]: KCOL3 [27: 26]: KCOL2 [29: 28]: KCOL1 [31: 30]: KCOL0

A0020804 GPIO_DRV0_SET GPIO DRV Control 00000000

Bit	31	30	29	28	27	26	25	24	23	22	21	20	19	18	17	16
Name	DRV0[31:16]															
Type	WO															
Reset	0	0	0	0	0	0	0	0	0	0	0	0	0	0	0	0
Bit	15	14	13	12	11	10	9	8	7	6	5	4	3	2	1	0
Name	DRV0[15:0]															
Type	WO															
Reset	0	0	0	0	0	0	0	0	0	0	0	0	0	0	0	0

Overview: For bitwise access of GPIO_DRV0

Bit(s)	Mnemonic	Name	Description
31:0		DRV0	**Bitwise SET operation of GPIO_DRV0_SET** 0: Keep 1: SET bits

A0020808 GPIO_DRV0_CLR GPIO DRV Control 00000000

Bit	31	30	29	28	27	26	25	24	23	22	21	20	19	18	17	16
Name	DRV0[31:16]															
Type	WO															
Reset	0	0	0	0	0	0	0	0	0	0	0	0	0	0	0	0
Bit	15	14	13	12	11	10	9	8	7	6	5	4	3	2	1	0
Name	DRV0[15:0]															
Type	WO															
Reset	0	0	0	0	0	0	0	0	0	0	0	0	0	0	0	0

Overview: For bitwise access of GPIO_DRV0

This document contains information that is proprietary to MediaTek Inc.
Unauthorized reproduction or disclosure of this information in whole or in part is strictly prohibited.
MEDIATEK CONFIDENTIAL FOR denglei@ far-sightedmobile.com USE ONLY

Bit(s)	Mnemonic	Name	Description
31:0		DRV0	**Bitwise CLR operation of GPIO_DRV0_CLR** 0: Keep 1: CLR bits

A0020810 **GPIO_DRV1** **GPIO DRV Control** **00C00000**

Bit	31	30	29	28	27	26	25	24	23	22	21	20	19	18	17	16
Name							**DRV1[25:16]**									
Type							RW									
Reset							0	0	1	1	0	0	0	0	0	0
Bit	15	14	13	12	11	10	9	8	7	6	5	4	3	2	1	0
Name	**DRV1[15:0]**															
Type	RW															
Reset	0	0	0	0	0	0	0	0	0	0	0	0	0	0	0	0

Overview: Configures GPIO driving control

Bit(s)	Mnemonic	Name	Description
25:0		DRV1	**GPIO_DRV1** [1: 0]: KROW4 [3: 2]: KROW3 [5: 4]: KROW2 [7: 6]: KROW1 [9: 8]: KROW0 [11: 10]: BPI_BUS2 [11: 10]: BPI_BUS1 [11: 10]: BPI_BUS0 [13: 12]: CMRST [13: 12]: CMPDN [13: 12]: CMCSD0 [13: 12]: CMCSD1 [13: 12]: CMMCLK [13: 12]: CMCSK [15: 14]: MCCK [15: 14]: MCCM0 [15: 14]: MCDA0 [15: 14]: MCDA1 [15: 14]: MCDA2 [15: 14]: MCDA3 [17: 16]: SIM1_SIO [17: 16]: SIM1_SRST [17: 16]: SIM1_SCLK [19: 18]: SIM2_SIO [19: 18]: SIM2_SRST [19: 18]: SIM2_SCLK [21: 20]: SCL28 [21: 20]: SDA28 [23: 22]: LSRSTB [23: 22]: LSCE_B [23: 22]: LSCK [23: 22]: LSDA [23: 22]: LSA0 [23: 22]:LPTE [25: 24]:RESETB

This document contains information that is proprietary to MediaTek Inc.
Unauthorized reproduction or disclosure of this information in whole or in part is strictly prohibited.
MEDIATEK CONFIDENTIAL FOR dengzhenli@fangtedmobile.com USE ONLY

A0020814 **GPIO_DRV1_SET** **GPIO DRV Control** **00000000**

Bit	31	30	29	28	27	26	25	24	23	22	21	20	19	18	17	16
Name							**DRV1[25:16]**									
Type							WO									
Reset							0	0	0	0	0	0	0	0	0	0
Bit	15	14	13	12	11	10	9	8	7	6	5	4	3	2	1	0
Name	**DRV1[15:0]**															
Type	WO															
Reset	0	0	0	0	0	0	0	0	0	0	0	0	0	0	0	0

Overview: For bitwise access of GPIO_DRV1

Bit(s)	Mnemonic	Name	Description
25:0		DRV1	**Bitwise SET operation of GPIO_DRV1_SET** 0: Keep 1: SET bits

A0020818 **GPIO_DRV1_CLR** **GPIO DRV Control** **00000000**

Bit	31	30	29	28	27	26	25	24	23	22	21	20	19	18	17	16
Name							**DRV1[25:16]**									
Type							WO									
Reset							0	0	0	0	0	0	0	0	0	0
Bit	15	14	13	12	11	10	9	8	7	6	5	4	3	2	1	0
Name	**DRV1[15:0]**															
Type	WO															
Reset	0	0	0	0	0	0	0	0	0	0	0	0	0	0	0	0

Overview: For bitwise access of GPIO_DRV1

Bit(s)	Mnemonic	Name	Description
25:0		DRV1	**Bitwise CLR operation of GPIO_DRV1_CLR** 0: Keep 1: CLR bits

A0020900 **GPIO_IES0** **GPIO IES Control** **43C00BFF**

Bit	31	30	29	28	27	26	25	24	23	22	21	20	19	18	17	16
Name		**GPIO30**					**GPIO25**	**GPIO24**	**GPIO23**	**GPIO22**						
Type		RW					RW	RW	RW	RW						
Reset		1					1	1	1	1						
Bit	15	14	13	12	11	10	9	8	7	6	5	4	3	2	1	0
Name					**GPIO11**		**GPIO9**	**GPIO8**	**GPIO7**	**GPIO6**	**GPIO5**	**GPIO4**	**GPIO3**	**GPIO2**	**GPIO1**	**GPIO0**
Type					RW		RW	RW	RW	RW	RW	RW	RW	RW	RW	RW
Reset					1		1	1	1	1	1	1	1	1	1	1

Overview: Configures GPIO input enabling control

This document contains information that is proprietary to MediaTek Inc.
Unauthorized reproduction or disclosure of this information in whole or in part is strictly prohibited.
MEDIATEK CONFIDENTIAL FOR dengzhenni@far-sightedmobile.com USE ONLY

Bit(s)	Mnemonic	Name	Description
30	**GPIO30**	GPIO30_IES	**Input buffer for GPIO30** 0: Disable 1: Enable
25	**GPIO25**	GPIO25_IES	**Input buffer for GPIO25** 0: Disable 1: Enable
24	**GPIO24**	GPIO24_IES	**Input buffer for GPIO24** 0: Disable 1: Enable
23	**GPIO23**	GPIO23_IES	**Input buffer for GPIO23** 0: Disable 1: Enable
22	**GPIO22**	GPIO22_IES	**Input buffer for GPIO22** 0: Disable 1: Enable
11	**GPIO11**	GPIO11_IES	**Input buffer for GPIO11** 0: Disable 1: Enable
9	**GPIO9**	GPIO9_IES	**Input buffer for GPIO9** 0: Disable 1: Enable
8	**GPIO8**	GPIO8_IES	**Input buffer for GPIO8** 0: Disable 1: Enable
7	**GPIO7**	GPIO7_IES	**Input buffer for GPIO7** 0: Disable 1: Enable
6	**GPIO6**	GPIO6_IES	**Input buffer for GPIO6** 0: Disable 1: Enable
5	**GPIO5**	GPIO5_IES	**Input buffer for GPIO5** 0: Disable 1: Enable
4	**GPIO4**	GPIO4_IES	**Input buffer for GPIO4** 0: Disable 1: Enable
3	**GPIO3**	GPIO3_IES	**Input buffer for GPIO3** 0: Disable 1: Enable
2	**GPIO2**	GPIO2_IES	**Input buffer for GPIO2** 0: Disable 1: Enable
1	**GPIO1**	GPIO1_IES	**Input buffer for GPIO1** 0: Disable 1: Enable
0	**GPIO0**	GPIO0_IES	**Input buffer for GPIO0** 0: Disable 1: Enable

MEDIATEK CONFIDENTIAL FOR dengzheni@ farsightedmobile.com USE ONLY

This document contains information that is proprietary to MediaTek Inc.
Unauthorized reproduction or disclosure of this information in whole or in part is strictly prohibited.

A0020904 **GPIO_IES0_SET** **GPIO IES Control** **00000000**

Bit	31	30	29	28	27	26	25	24	23	22	21	20	19	18	17	16
Name		GPIO30					GPIO25	GPIO24	GPIO23	GPIO22						
Type		WO					WO	WO	WO	WO						
Reset		0					0	0	0	0						
Bit	15	14	13	12	11	10	9	8	7	6	5	4	3	2	1	0
Name					GPIO11		GPIO9	GPIO8	GPIO7	GPIO6	GPIO5	GPIO4	GPIO3	GPIO2	GPIO1	GPIO0
Type					WO		WO	WO	WO	WO	WO	WO	WO	WO	WO	WO
Reset					0		0	0	0	0	0	0	0	0	0	0

Overview: For bitwise access of GPIO_IES0

Bit(s)	Mnemonic	Name	Description
30	**GPIO30**	GPIO30_IES	**Bitwise SET operation of GPIO30 input buffer** 0: Keep 1: SET bits
25	**GPIO25**	GPIO25_IES	**Bitwise SET operation of GPIO25 input buffer** 0: Keep 1: SET bits
24	**GPIO24**	GPIO24_IES	**Bitwise SET operation of GPIO24 input buffer** 0: Keep 1: SET bits
23	**GPIO23**	GPIO23_IES	**Bitwise SET operation of GPIO23 input buffer** 0: Keep 1: SET bits
22	**GPIO22**	GPIO22_IES	**Bitwise SET operation of GPIO22 input buffer** 0: Keep 1: SET bits
11	**GPIO11**	GPIO11_IES	**Bitwise SET operation of GPIO11 input buffer** 0: Keep 1: SET bits
9	**GPIO9**	GPIO9_IES	**Bitwise SET operation of GPIO9 input buffer** 0: Keep 1: SET bits
8	**GPIO8**	GPIO8_IES	**Bitwise SET operation of GPIO8 input buffer** 0: Keep 1: SET bits
7	**GPIO7**	GPIO7_IES	**Bitwise SET operation of GPIO7 input buffer** 0: Keep 1: SET bits
6	**GPIO6**	GPIO6_IES	**Bitwise SET operation of GPIO6 input buffer** 0: Keep 1: SET bits
5	**GPIO5**	GPIO5_IES	**Bitwise SET operation of GPIO5 input buffer** 0: Keep 1: SET bits
4	**GPIO4**	GPIO4_IES	**Bitwise SET operation of GPIO4 input buffer** 0: Keep 1: SET bits
3	**GPIO3**	GPIO3_IES	**Bitwise SET operation of GPIO3 input buffer** 0: Keep

This document contains information that is proprietary to MediaTek Inc.
Unauthorized reproduction or disclosure of this information in whole or in part is strictly prohibited.
MEDIATEK CONFIDENTIAL FOR dengzhenli@ far-sightedmobile.com USE ONLY

Bit(s)	Mnemonic	Name	Description
			1: SET bits
2	**GPIO2**	GPIO2_IES	**Bitwise SET operation of GPIO2 input buffer** 0: Keep 1: SET bits
1	**GPIO1**	GPIO1_IES	**Bitwise SET operation of GPIO1 input buffer** 0: Keep 1: SET bits
0	**GPIO0**	GPIO0_IES	**Bitwise SET operation of GPIO0 input buffer** 0: Keep 1: SET bits

A0020908 **GPIO_IES0_CLR** **GPIO IES Control** **00000000**

Bit	31	30	29	28	27	26	25	24	23	22	21	20	19	18	17	16
Name		**GPIO30**					**GPIO25**	**GPIO24**	**GPIO23**	**GPIO22**						
Type		WO					WO	WO	WO	WO						
Reset		0					0	0	0	0						
Bit	15	14	13	12	11	10	9	8	7	6	5	4	3	2	1	0
Name					**GPIO11**		**GPIO9**	**GPIO8**	**GPIO7**	**GPIO6**	**GPIO5**	**GPIO4**	**GPIO3**	**GPIO2**	**GPIO1**	**GPIO0**
Type					WO		WO	WO	WO	WO	WO	WO	WO	WO	WO	WO
Reset					0		0	0	0	0	0	0	0	0	0	0

Overview: For bitwise access of GPIO_IES0

Bit(s)	Mnemonic	Name	Description
30	**GPIO30**	GPIO30_IES	**Bitwise CLR operation of GPIO30 input buffer** 0: Keep 1: CLR bits
25	**GPIO25**	GPIO25_IES	**Bitwise CLR operation of GPIO25 input buffer** 0: Keep 1: CLR bits
24	**GPIO24**	GPIO24_IES	**Bitwise CLR operation of GPIO24 input buffer** 0: Keep 1: CLR bits
23	**GPIO23**	GPIO23_IES	**Bitwise CLR operation of GPIO23 input buffer** 0: Keep 1: CLR bits
22	**GPIO22**	GPIO22_IES	**Bitwise CLR operation of GPIO22 input buffer** 0: Keep 1: CLR bits
11	**GPIO11**	GPIO11_IES	**Bitwise CLR operation of GPIO11 input buffer** 0: Keep 1: CLR bits
9	**GPIO9**	GPIO9_IES	**Bitwise CLR operation of GPIO9 input buffer** 0: Keep 1: CLR bits
8	**GPIO8**	GPIO8_IES	**Bitwise CLR operation of GPIO8 input buffer** 0: Keep 1: CLR bits

MEDIATEK CONFIDENTIAL FOR dengzhenli@ farsighttechmobile.com USE ONLY

This document contains information that is proprietary to MediaTek Inc.
Unauthorized reproduction or disclosure of this information in whole or in part is strictly prohibited.

Bit(s)	Mnemonic	Name	Description
7	**GPIO7**	GPIO7_IES	**Bitwise CLR operation of GPIO7 input buffer** 0: Keep 1: CLR bits
6	**GPIO6**	GPIO6_IES	**Bitwise CLR operation of GPIO6 input buffer** 0: Keep 1: CLR bits
5	**GPIO5**	GPIO5_IES	**Bitwise CLR operation of GPIO5 input buffer** 0: Keep 1: CLR bits
4	**GPIO4**	GPIO4_IES	**Bitwise CLR operation of GPIO4 input buffer** 0: Keep 1: CLR bits
3	**GPIO3**	GPIO3_IES	**Bitwise CLR operation of GPIO3 input buffer** 0: Keep 1: CLR bits
2	**GPIO2**	GPIO2_IES	**Bitwise CLR operation of GPIO2 input buffer** 0: Keep 1: CLR bits
1	**GPIO1**	GPIO1_IES	**Bitwise CLR operation of GPIO1 input buffer** 0: Keep 1: CLR bits
0	**GPIO0**	GPIO0_IES	**Bitwise CLR operation of GPIO0 input buffer** 0: Keep 1: CLR bits

A0020910 GPIO_IES1 GPIO IES Control 00001FE0

Bit	31	30	29	28	27	26	25	24	23	22	21	20	19	18	17	16
Name																
Type																
Reset																
Bit	15	14	13	12	11	10	9	8	7	6	5	4	3	2	1	0
Name				GPIO44	GPIO43	GPIO42	GPIO41	GPIO40	GPIO39	GPIO38	GPIO37					
Type				RW	RW	RW	RW	RW	RW	RW	RW					
Reset				1	1	1	1	1	1	1	1					

Overview: Configures GPIO input enabling control

Bit(s)	Mnemonic	Name	Description
12	**GPIO44**	GPIO44_IES	**Input buffer for GPIO44** 0: Disable 1: Enable
11	**GPIO43**	GPIO43_IES	**Input buffer for GPIO43** 0: Disable 1: Enable
10	**GPIO42**	GPIO42_IES	**Input buffer for GPIO42** 0: Disable 1: Enable
9	**GPIO41**	GPIO41_IES	**Input buffer for GPIO41** 0: Disable

This document contains information that is proprietary to MediaTek Inc.
Unauthorized reproduction or disclosure of this information in whole or in part is strictly prohibited.
MEDIATEK CONFIDENTIAL FOR dengzhenli@fae-sightedmobile.com USE ONLY

Bit(s)	Mnemonic	Name	Description
			1: Enable
8	**GPIO40**	GPIO40_IES	**Input buffer for GPIO40** 0: Disable 1: Enable
7	**GPIO39**	GPIO39_IES	**Input buffer for GPIO39** 0: Disable 1: Enable
6	**GPIO38**	GPIO38_IES	**Input buffer for GPIO38** 0: Disable 1: Enable
5	**GPIO37**	GPIO37_IES	**Input buffer for GPIO37** 0: Disable 1: Enable

A0020914 GPIO_IES1_SET GPIO IES Control 00000000

Bit	31	30	29	28	27	26	25	24	23	22	21	20	19	18	17	16
Name																
Type																
Reset																
Bit	15	14	13	12	11	10	9	8	7	6	5	4	3	2	1	0
Name				GPIO44	GPIO43	GPIO42	GPIO41	GPIO40	GPIO39	GPIO38	GPIO37					
Type				WO	WO	WO	WO	WO	WO	WO	WO					
Reset				0	0	0	0	0	0	0	0					

Overview: For bitwise access of GPIO_IES1

Bit(s)	Mnemonic	Name	Description
12	**GPIO44**	GPIO44_IES	**Bitwise SET operation of GPIO44 input buffer** 0: Keep 1: SET bits
11	**GPIO43**	GPIO43_IES	**Bitwise SET operation of GPIO43 input buffer** 0: Keep 1: SET bits
10	**GPIO42**	GPIO42_IES	**Bitwise SET operation of GPIO42 input buffer** 0: Keep 1: SET bits
9	**GPIO41**	GPIO41_IES	**Bitwise SET operation of GPIO41 input buffer** 0: Keep 1: SET bits
8	**GPIO40**	GPIO40_IES	**Bitwise SET operation of GPIO40 input buffer** 0: Keep 1: SET bits
7	**GPIO39**	GPIO39_IES	**Bitwise SET operation of GPIO39 input buffer** 0: Keep 1: SET bits
6	**GPIO38**	GPIO38_IES	**Bitwise SET operation of GPIO38 input buffer** 0: Keep 1: SET bits
5	**GPIO37**	GPIO37_IES	**Bitwise SET operation of GPIO37 input buffer**

This document contains information that is proprietary to MediaTek Inc.
Unauthorized reproduction or disclosure of this information in whole or in part is strictly prohibited.
MEDIATEK CONFIDENTIAL FOR dengzhenli@ farsightemobile.com USE ONLY

Bit(s)	Mnemonic	Name	Description
			0: Keep 1: SET bits

A0020918 **GPIO_IES1_CLR** **GPIO IES Control** **00000000**

Bit	31	30	29	28	27	26	25	24	23	22	21	20	19	18	17	16
Name																
Type																
Reset																
Bit	**15**	**14**	**13**	**12**	**11**	**10**	**9**	**8**	**7**	**6**	**5**	**4**	**3**	**2**	**1**	**0**
Name				GPIO44	GPIO43	GPIO42	GPIO41	GPIO40	GPIO39	GPIO38	GPIO37					
Type				WO	WO	WO	WO	WO	WO	WO	WO					
Reset				0	0	0	0	0	0	0	0					

Overview: For bitwise access of GPIO_IES1

Bit(s)	Mnemonic	Name	Description
12	**GPIO44**	GPIO44_IES	**Bitwise CLR operation of GPIO44 input buffer** 0: Keep 1: CLR bits
11	**GPIO43**	GPIO43_IES	**Bitwise CLR operation of GPIO43 input buffer** 0: Keep 1: CLR bits
10	**GPIO42**	GPIO42_IES	**Bitwise CLR operation of GPIO42 input buffer** 0: Keep 1: CLR bits
9	**GPIO41**	GPIO41_IES	**Bitwise CLR operation of GPIO41 input buffer** 0: Keep 1: CLR bits
8	**GPIO40**	GPIO40_IES	**Bitwise CLR operation of GPIO40 input buffer** 0: Keep 1: CLR bits
7	**GPIO39**	GPIO39_IES	**Bitwise CLR operation of GPIO39 input buffer** 0: Keep 1: CLR bits
6	**GPIO38**	GPIO38_IES	**Bitwise CLR operation of GPIO38 input buffer** 0: Keep 1: CLR bits
5	**GPIO37**	GPIO37_IES	**Bitwise CLR operation of GPIO37 input buffer** 0: Keep 1: CLR bits

A0020A00 **GPIO_PUPD0** **GPIO PUPD Control** **303E0000**

Bit	31	30	29	28	27	26	25	24	23	22	21	20	19	18	17	16
Name	GPIO31		GPIO29	GPIO28	GPIO27	GPIO26					GPIO21	GPIO20	GPIO19	GPIO18	GPIO17	GPIO16
Type	RW		RW	RW	RW	RW					RW	RW	RW	RW	RW	RW
Reset	0		1	1	0	0					1	1	1	1	1	0

This document contains information that is proprietary to MediaTek Inc.
Unauthorized reproduction or disclosure of this information in whole or in part is strictly prohibited.
MEDIATEK CONFIDENTIAL FOR denghenli@ fareastedmobile.com USE ONLY

Bit	15	14	13	12	11	10	9	8	7	6	5	4	3	2	1	0
Name	GPIO15	GPIO14	GPIO13	GPIO12		GPIO10										
Type	RW	RW	RW	RW		RW										
Reset	0	0	0	0		0										

Overview: Configures GPIO PUPD control

Bit(s)	Mnemonic	Name	Description
31	**GPIO31**	GPIO31_PUPD	**PUPD for GPIO31** 0: Disable 1: Enable
29	**GPIO29**	GPIO29_PUPD	**PUPD for GPIO29** 0: Disable 1: Enable
28	**GPIO28**	GPIO28_PUPD	**PUPD for GPIO28** 0: Disable 1: Enable
27	**GPIO27**	GPIO27_PUPD	**PUPD for GPIO27** 0: Disable 1: Enable
26	**GPIO26**	GPIO26_PUPD	**PUPD for GPIO26** 0: Disable 1: Enable
21	**GPIO21**	GPIO21_PUPD	**PUPD for GPIO21** 0: Disable 1: Enable
20	**GPIO20**	GPIO20_PUPD	**PUPD for GPIO20** 0: Disable 1: Enable
19	**GPIO19**	GPIO19_PUPD	**PUPD for GPIO19** 0: Disable 1: Enable
18	**GPIO18**	GPIO18_PUPD	**PUPD for GPIO18** 0: Disable 1: Enable
17	**GPIO17**	GPIO17_PUPD	**PUPD for GPIO17** 0: Disable 1: Enable
16	**GPIO16**	GPIO16_PUPD	**PUPD for GPIO16** 0: Disable 1: Enable
15	**GPIO15**	GPIO15_PUPD	**PUPD for GPIO15** 0: Disable 1: Enable
14	**GPIO14**	GPIO14_PUPD	**PUPD for GPIO14** 0: Disable 1: Enable
13	**GPIO13**	GPIO13_PUPD	**PUPD for GPIO13** 0: Disable 1: Enable
12	**GPIO12**	GPIO12_PUPD	**PUPD for GPIO12** 0: Disable

This document contains information that is proprietary to MediaTek Inc.
Unauthorized reproduction or disclosure of this information in whole or in part is strictly prohibited.
MEDIATEK CONFIDENTIAL FOR dengzhenli@far-sightedmobile.com USE ONLY

Bit(s)	Mnemonic	Name	Description
			1: Enable
10	**GPIO10**	GPIO10_PUPD	**PUPD for GPIO10** 0: Disable 1: Enable

A0020A04 **GPIO_PUPD0_SET** **GPIO PUPD Control** **00000000**

Bit	31	30	29	28	27	26	25	24	23	22	21	20	19	18	17	16
Name	GPIO31		GPIO29	GPIO28	GPIO27	GPIO26					GPIO21	GPIO20	GPIO19	GPIO18	GPIO17	GPIO16
Type	WO		WO	WO	WO	WO					WO	WO	WO	WO	WO	WO
Reset	0		0	0	0	0					0	0	0	0	0	0
Bit	15	14	13	12	11	10	9	8	7	6	5	4	3	2	1	0
Name	GPIO15	GPIO14	GPIO13	GPIO12		GPIO10										
Type	WO	WO	WO	WO		WO										
Reset	0	0	0	0		0										

Overview: For bitwise access of GPIO_PUPD0

Bit(s)	Mnemonic	Name	Description
31	**GPIO31**	GPIO31_PUPD	**Bitwise SET operation of GPIO31 PUPD** 0: Keep 1: SET bits
29	**GPIO29**	GPIO29_PUPD	**Bitwise SET operation of GPIO29 PUPD** 0: Keep 1: SET bits
28	**GPIO28**	GPIO28_PUPD	**Bitwise SET operation of GPIO28 PUPD** 0: Keep 1: SET bits
27	**GPIO27**	GPIO27_PUPD	**Bitwise SET operation of GPIO27 PUPD** 0: Keep 1: SET bits
26	**GPIO26**	GPIO26_PUPD	**Bitwise SET operation of GPIO26 PUPD** 0: Keep 1: SET bits
21	**GPIO21**	GPIO21_PUPD	**Bitwise SET operation of GPIO21 PUPD** 0: Keep 1: SET bits
20	**GPIO20**	GPIO20_PUPD	**Bitwise SET operation of GPIO20 PUPD** 0: Keep 1: SET bits
19	**GPIO19**	GPIO19_PUPD	**Bitwise SET operation of GPIO19 PUPD** 0: Keep 1: SET bits
18	**GPIO18**	GPIO18_PUPD	**Bitwise SET operation of GPIO18 PUPD** 0: Keep 1: SET bits
17	**GPIO17**	GPIO17_PUPD	**Bitwise SET operation of GPIO17 PUPD** 0: Keep 1: SET bits

This document contains information that is proprietary to MediaTek Inc.
Unauthorized reproduction or disclosure of this information in whole or in part is strictly prohibited.
MEDIATEK CONFIDENTIAL FOR dengzhenli@fartsightedmobile.com USE ONLY

Bit(s)	Mnemonic	Name	Description
16	**GPIO16**	GPIO16_PUPD	**Bitwise SET operation of GPIO16 PUPD** 0: Keep 1: SET bits
15	**GPIO15**	GPIO15_PUPD	**Bitwise SET operation of GPIO15 PUPD** 0: Keep 1: SET bits
14	**GPIO14**	GPIO14_PUPD	**Bitwise SET operation of GPIO14 PUPD** 0: Keep 1: SET bits
13	**GPIO13**	GPIO13_PUPD	**Bitwise SET operation of GPIO13 PUPD** 0: Keep 1: SET bits
12	**GPIO12**	GPIO12_PUPD	**Bitwise SET operation of GPIO12 PUPD** 0: Keep 1: SET bits
10	**GPIO10**	GPIO10_PUPD	**Bitwise SET operation of GPIO10 PUPD** 0: Keep 1: SET bits

A0020A08 **GPIO_PUPD0_CLR** **GPIO PUPD Control** **00000000**

Bit	31	30	29	28	27	26	25	24	23	22	21	20	19	18	17	16
Name	**GPIO31**		**GPIO29**	**GPIO28**	**GPIO27**	**GPIO26**					**GPIO21**	**GPIO20**	**GPIO19**	**GPIO18**	**GPIO17**	**GPIO16**
Type	WO		WO	WO	WO	WO					WO	WO	WO	WO	WO	WO
Reset	0		0	0	0	0					0	0	0	0	0	0
Bit	15	14	13	12	11	10	9	8	7	6	5	4	3	2	1	0
Name	**GPIO15**	**GPIO14**	**GPIO13**	**GPIO12**		**GPIO10**										
Type	WO	WO	WO	WO		WO										
Reset	0	0	0	0		0										

Overview: For bitwise access of GPIO_PUPD0

Bit(s)	Mnemonic	Name	Description
31	**GPIO31**	GPIO31_PUPD	**Bitwise CLR operation of GPIO31 PUPD** 0: Keep 1: CLR bits
29	**GPIO29**	GPIO29_PUPD	**Bitwise CLR operation of GPIO29 PUPD** 0: Keep 1: CLR bits
28	**GPIO28**	GPIO28_PUPD	**Bitwise CLR operation of GPIO28 PUPD** 0: Keep 1: CLR bits
27	**GPIO27**	GPIO27_PUPD	**Bitwise CLR operation of GPIO27 PUPD** 0: Keep 1: CLR bits
26	**GPIO26**	GPIO26_PUPD	**Bitwise CLR operation of GPIO26 PUPD** 0: Keep 1: CLR bits
21	**GPIO21**	GPIO21_PUPD	**Bitwise CLR operation of GPIO21 PUPD**

This document contains information that is proprietary to MediaTek Inc.
Unauthorized reproduction or disclosure of this information in whole or in part is strictly prohibited.
MEDIATEK CONFIDENTIAL FOR dengzhenli@far-sightedmobile.com USE ONLY

Bit(s)	Mnemonic	Name	Description
			0: Keep 1: CLR bits
20	**GPIO20**	GPIO20_PUPD	**Bitwise CLR operation of GPIO20 PUPD** 0: Keep 1: CLR bits
19	**GPIO19**	GPIO19_PUPD	**Bitwise CLR operation of GPIO19 PUPD** 0: Keep 1: CLR bits
18	**GPIO18**	GPIO18_PUPD	**Bitwise CLR operation of GPIO18 PUPD** 0: Keep 1: CLR bits
17	**GPIO17**	GPIO17_PUPD	**Bitwise CLR operation of GPIO17 PUPD** 0: Keep 1: CLR bits
16	**GPIO16**	GPIO16_PUPD	**Bitwise CLR operation of GPIO16 PUPD** 0: Keep 1: CLR bits
15	**GPIO15**	GPIO15_PUPD	**Bitwise CLR operation of GPIO15 PUPD** 0: Keep 1: CLR bits
14	**GPIO14**	GPIO14_PUPD	**Bitwise CLR operation of GPIO14 PUPD** 0: Keep 1: CLR bits
13	**GPIO13**	GPIO13_PUPD	**Bitwise CLR operation of GPIO13 PUPD** 0: Keep 1: CLR bits
12	**GPIO12**	GPIO12_PUPD	**Bitwise CLR operation of GPIO12 PUPD** 0: Keep 1: CLR bits
10	**GPIO10**	GPIO10_PUPD	**Bitwise CLR operation of GPIO10 PUPD** 0: Keep 1: CLR bits

A0020A10 GPIO_PUPD1 GPIO PUPD Control 0007A7FE

Bit	31	30	29	28	27	26	25	24	23	22	21	20	19	18	17	16
Name													GPIO51	GPIO50	GPIO49	GPIO48
Type													RW	RW	RW	RW
Reset													0	1	1	1
Bit	15	14	13	12	11	10	9	8	7	6	5	4	3	2	1	0
Name	GPIO47	GPIO46	GPIO45			GPIO42	GPIO41	GPIO40	GPIO39	GPIO38	GPIO37	GPIO36	GPIO35	GPIO34	GPIO33	GPIO32
Type	RW	RW	RW			RW	RW	RW	RW	RW	RW	RW	RW	RW	RW	RW
Reset	1	0	1			1	1	1	1	1	1	1	1	1	1	0

Overview: Configures GPIO PUPD control

Bit(s)	Mnemonic	Name	Description
19	**GPIO51**	GPIO51_PUPD	**PUPD for GPIO51** 0: Disable 1: Enable

This document contains information that is proprietary to MediaTek Inc.
Unauthorized reproduction or disclosure of this information in whole or in part is strictly prohibited.
MEDIATEK CONFIDENTIAL FOR dengzhenli@far-sightedmobile.com USE ONLY

Bit(s)	Mnemonic	Name	Description
18	**GPIO50**	GPIO50_PUPD	**PUPD for GPIO50** 0: Disable 1: Enable
17	**GPIO49**	GPIO49_PUPD	**PUPD for GPIO49** 0: Disable 1: Enable
16	**GPIO48**	GPIO48_PUPD	**PUPD for GPIO48** 0: Disable 1: Enable
15	**GPIO47**	GPIO47_PUPD	**PUPD for GPIO47** 0: Disable 1: Enable
14	**GPIO46**	GPIO46_PUPD	**PUPD for GPIO46** 0: Disable 1: Enable
13	**GPIO45**	GPIO45_PUPD	**PUPD for GPIO45** 0: Disable 1: Enable
10	**GPIO42**	GPIO42_PUPD	**PUPD for GPIO42** 0: Disable 1: Enable
9	**GPIO41**	GPIO41_PUPD	**PUPD for GPIO41** 0: Disable 1: Enable
8	**GPIO40**	GPIO40_PUPD	**PUPD for GPIO40** 0: Disable 1: Enable
7	**GPIO39**	GPIO39_PUPD	**PUPD for GPIO39** 0: Disable 1: Enable
6	**GPIO38**	GPIO38_PUPD	**PUPD for GPIO38** 0: Disable 1: Enable
5	**GPIO37**	GPIO37_PUPD	**PUPD for GPIO37** 0: Disable 1: Enable
4	**GPIO36**	GPIO36_PUPD	**PUPD for GPIO36** 0: Disable 1: Enable
3	**GPIO35**	GPIO35_PUPD	**PUPD for GPIO35** 0: Disable 1: Enable
2	**GPIO34**	GPIO34_PUPD	**PUPD for GPIO34** 0: Disable 1: Enable
1	**GPIO33**	GPIO33_PUPD	**PUPD for GPIO33** 0: Disable 1: Enable
0	**GPIO32**	GPIO32_PUPD	**PUPD for GPIO32** 0: Disable 1: Enable

This document contains information that is proprietary to MediaTek Inc.
Unauthorized reproduction or disclosure of this information in whole or in part is strictly prohibited.
MEDIATEK CONFIDENTIAL FOR dengzhenli@far-sightedmobile.com USE ONLY

A0020A14	GPIO_PUPD1_SET	GPIO PUPD Control	00000000

Bit	31	30	29	28	27	26	25	24	23	22	21	20	19	18	17	16
Name													GPIO51	GPIO50	GPIO49	GPIO48
Type													WO	WO	WO	WO
Reset													0	0	0	0
Bit	15	14	13	12	11	10	9	8	7	6	5	4	3	2	1	0
Name	GPIO47	GPIO46	GPIO45			GPIO42	GPIO41	GPIO40	GPIO39	GPIO38	GPIO37	GPIO36	GPIO35	GPIO34	GPIO33	GPIO32
Type	WO	WO	WO			WO	WO	WO	WO	WO	WO	WO	WO	WO	WO	WO
Reset	0	0	0			0	0	0	0	0	0	0	0	0	0	0

Overview: For bitwise access of GPIO_PUPD1

Bit(s)	Mnemonic	Name	Description
19	**GPIO51**	GPIO51_PUPD	**Bitwise SET operation of GPIO51 PUPD** 0: Keep 1: SET bits
18	**GPIO50**	GPIO50_PUPD	**Bitwise SET operation of GPIO50 PUPD** 0: Keep 1: SET bits
17	**GPIO49**	GPIO49_PUPD	**Bitwise SET operation of GPIO49 PUPD** 0: Keep 1: SET bits
16	**GPIO48**	GPIO48_PUPD	**Bitwise SET operation of GPIO48 PUPD** 0: Keep 1: SET bits
15	**GPIO47**	GPIO47_PUPD	**Bitwise SET operation of GPIO47 PUPD** 0: Keep 1: SET bits
14	**GPIO46**	GPIO46_PUPD	**Bitwise SET operation of GPIO46 PUPD** 0: Keep 1: SET bits
13	**GPIO45**	GPIO45_PUPD	**Bitwise SET operation of GPIO45 PUPD** 0: Keep 1: SET bits
10	**GPIO42**	GPIO42_PUPD	**Bitwise SET operation of GPIO42 PUPD** 0: Keep 1: SET bits
9	**GPIO41**	GPIO41_PUPD	**Bitwise SET operation of GPIO41 PUPD** 0: Keep 1: SET bits
8	**GPIO40**	GPIO40_PUPD	**Bitwise SET operation of GPIO40 PUPD** 0: Keep 1: SET bits
7	**GPIO39**	GPIO39_PUPD	**Bitwise SET operation of GPIO39 PUPD** 0: Keep 1: SET bits
6	**GPIO38**	GPIO38_PUPD	**Bitwise SET operation of GPIO38 PUPD** 0: Keep 1: SET bits

MEDIATEK CONFIDENTIAL FOR dengzhenli@fareastedmobile.com USE ONLY

This document contains information that is proprietary to MediaTek Inc.
Unauthorized reproduction or disclosure of this information in whole or in part is strictly prohibited.

Bit(s)	Mnemonic	Name	Description
5	**GPIO37**	GPIO37_PUPD	**Bitwise SET operation of GPIO37 PUPD** 0: Keep 1: SET bits
4	**GPIO36**	GPIO36_PUPD	**Bitwise SET operation of GPIO36 PUPD** 0: Keep 1: SET bits
3	**GPIO35**	GPIO35_PUPD	**Bitwise SET operation of GPIO35 PUPD** 0: Keep 1: SET bits
2	**GPIO34**	GPIO34_PUPD	**Bitwise SET operation of GPIO34 PUPD** 0: Keep 1: SET bits
1	**GPIO33**	GPIO33_PUPD	**Bitwise SET operation of GPIO33 PUPD** 0: Keep 1: SET bits
0	**GPIO32**	GPIO32_PUPD	**Bitwise SET operation of GPIO32 PUPD** 0: Keep 1: SET bits

A0020A18 **GPIO_PUPD1_CLR** **GPIO PUPD Control** **00000000**

Bit	31	30	29	28	27	26	25	24	23	22	21	20	19	18	17	16
Name													**GPIO51**	**GPIO50**	**GPIO49**	**GPIO48**
Type													WO	WO	WO	WO
Reset													0	0	0	0
Bit	15	14	13	12	11	10	9	8	7	6	5	4	3	2	1	0
Name	**GPIO47**	**GPIO46**	**GPIO45**			**GPIO42**	**GPIO41**	**GPIO40**	**GPIO39**	**GPIO38**	**GPIO37**	**GPIO36**	**GPIO35**	**GPIO34**	**GPIO33**	**GPIO32**
Type	WO	WO	WO			WO	WO	WO	WO	WO	WO	WO	WO	WO	WO	WO
Reset	0	0	0			0	0	0	0	0	0	0	0	0	0	0

Overview: For bitwise access of GPIO_PUPD1

Bit(s)	Mnemonic	Name	Description
19	**GPIO51**	GPIO51_PUPD	**Bitwise CLR operation of GPIO51 PUPD** 0: Keep 1: CLR bits
18	**GPIO50**	GPIO50_PUPD	**Bitwise CLR operation of GPIO50 PUPD** 0: Keep 1: CLR bits
17	**GPIO49**	GPIO49_PUPD	**Bitwise CLR operation of GPIO49 PUPD** 0: Keep 1: CLR bits
16	**GPIO48**	GPIO48_PUPD	**Bitwise CLR operation of GPIO48 PUPD** 0: Keep 1: CLR bits
15	**GPIO47**	GPIO47_PUPD	**Bitwise CLR operation of GPIO47 PUPD** 0: Keep 1: CLR bits
14	**GPIO46**	GPIO46_PUPD	**Bitwise CLR operation of GPIO46 PUPD**

MEDIATEK CONFIDENTIAL FOR dengzhenli@far-sightedmobile.com USE ONLY

This document contains information that is proprietary to MediaTek Inc.
Unauthorized reproduction or disclosure of this information in whole or in part is strictly prohibited.

Bit(s)	Mnemonic	Name	Description
			0: Keep 1: CLR bits
13	**GPIO45**	GPIO45_PUPD	**Bitwise CLR operation of GPIO45 PUPD** 0: Keep 1: CLR bits
10	**GPIO42**	GPIO42_PUPD	**Bitwise CLR operation of GPIO42 PUPD** 0: Keep 1: CLR bits
9	**GPIO41**	GPIO41_PUPD	**Bitwise CLR operation of GPIO41 PUPD** 0: Keep 1: CLR bits
8	**GPIO40**	GPIO40_PUPD	**Bitwise CLR operation of GPIO40 PUPD** 0: Keep 1: CLR bits
7	**GPIO39**	GPIO39_PUPD	**Bitwise CLR operation of GPIO39 PUPD** 0: Keep 1: CLR bits
6	**GPIO38**	GPIO38_PUPD	**Bitwise CLR operation of GPIO38 PUPD** 0: Keep 1: CLR bits
5	**GPIO37**	GPIO37_PUPD	**Bitwise CLR operation of GPIO37 PUPD** 0: Keep 1: CLR bits
4	**GPIO36**	GPIO36_PUPD	**Bitwise CLR operation of GPIO36 PUPD** 0: Keep 1: CLR bits
3	**GPIO35**	GPIO35_PUPD	**Bitwise CLR operation of GPIO35 PUPD** 0: Keep 1: CLR bits
2	**GPIO34**	GPIO34_PUPD	**Bitwise CLR operation of GPIO34 PUPD** 0: Keep 1: CLR bits
1	**GPIO33**	GPIO33_PUPD	**Bitwise CLR operation of GPIO33 PUPD** 0: Keep 1: CLR bits
0	**GPIO32**	GPIO32_PUPD	**Bitwise CLR operation of GPIO32 PUPD** 0: Keep 1: CLR bits

A0020B00 **GPIO_RESEN0_0** **GPIO R0 Control** **B83FF400**

Bit	31	30	29	28	27	26	25	24	23	22	21	20	19	18	17	16
Name	GPIO31		GPIO29	GPIO28	GPIO27	GPIO26					GPIO21	GPIO20	GPIO19	GPIO18	GPIO17	GPIO16
Type	RW		RW	RW	RW	RW					RW	RW	RW	RW	RW	RW
Reset	1		1	1	1	0					1	1	1	1	1	1
Bit	15	14	13	12	11	10	9	8	7	6	5	4	3	2	1	0
Name	GPIO15	GPIO14	GPIO13	GPIO12		GPIO10										
Type	RW	RW	RW	RW		RW										
Reset	1	1	1	1		1										

This document contains information that is proprietary to MediaTek Inc.
Unauthorized reproduction or disclosure of this information in whole or in part is strictly prohibited.

Overview: Configures GPIO R0 control

Bit(s)	Mnemonic	Name	Description
31	**GPIO31**	GPIO31_R0	**R0 for GPIO31** 0: Disable 1: Enable
29	**GPIO29**	GPIO29_R0	**R0 for GPIO29** 0: Disable 1: Enable
28	**GPIO28**	GPIO28_R0	**R0 for GPIO28** 0: Disable 1: Enable
27	**GPIO27**	GPIO27_R0	**R0 for GPIO27** 0: Disable 1: Enable
26	**GPIO26**	GPIO26_R0	**R0 for GPIO26** 0: Disable 1: Enable
21	**GPIO21**	GPIO21_R0	**R0 for GPIO21** 0: Disable 1: Enable
20	**GPIO20**	GPIO20_R0	**R0 for GPIO20** 0: Disable 1: Enable
19	**GPIO19**	GPIO19_R0	**R0 for GPIO19** 0: Disable 1: Enable
18	**GPIO18**	GPIO18_R0	**R0 for GPIO18** 0: Disable 1: Enable
17	**GPIO17**	GPIO17_R0	**R0 for GPIO17** 0: Disable 1: Enable
16	**GPIO16**	GPIO16_R0	**R0 for GPIO16** 0: Disable 1: Enable
15	**GPIO15**	GPIO15_R0	**R0 for GPIO15** 0: Disable 1: Enable
14	**GPIO14**	GPIO14_R0	**R0 for GPIO14** 0: Disable 1: Enable
13	**GPIO13**	GPIO13_R0	**R0 for GPIO13** 0: Disable 1: Enable
12	**GPIO12**	GPIO12_R0	**R0 for GPIO12** 0: Disable 1: Enable
10	**GPIO10**	GPIO10_R0	**R0 for GPIO10** 0: Disable 1: Enable

This document contains information that is proprietary to MediaTek Inc.
Unauthorized reproduction or disclosure of this information in whole or in part is strictly prohibited.
MEDIATEK CONFIDENTIAL FOR dengzhenli@ farsightedmobile.com USE ONLY

A0020B04 GPIO_RESEN0_0_SET GPIO R0 Control 00000000

Bit	31	30	29	28	27	26	25	24	23	22	21	20	19	18	17	16
Name	GPIO31		GPIO29	GPIO28	GPIO27	GPIO26					GPIO21	GPIO20	GPIO19	GPIO18	GPIO17	GPIO16
Type	WO		WO	WO	WO	WO					WO	WO	WO	WO	WO	WO
Reset	0		0	0	0	0					0	0	0	0	0	0
Bit	15	14	13	12	11	10	9	8	7	6	5	4	3	2	1	0
Name	GPIO15	GPIO14	GPIO13	GPIO12		GPIO10										
Type	WO	WO	WO	WO		WO										
Reset	0	0	0	0		0										

Overview: For bitwise access of GPIO_RESEN0_0

Bit(s)	Mnemonic	Name	Description
31	**GPIO31**	GPIO31_R0	**Bitwise SET operation of GPIO31 R0** 0: Keep 1: SET bits
29	**GPIO29**	GPIO29_R0	**Bitwise SET operation of GPIO29 R0** 0: Keep 1: SET bits
28	**GPIO28**	GPIO28_R0	**Bitwise SET operation of GPIO28 R0** 0: Keep 1: SET bits
27	**GPIO27**	GPIO27_R0	**Bitwise SET operation of GPIO27 R0** 0: Keep 1: SET bits
26	**GPIO26**	GPIO26_R0	**Bitwise SET operation of GPIO26 R0** 0: Keep 1: SET bits
21	**GPIO21**	GPIO21_R0	**Bitwise SET operation of GPIO21 R0** 0: Keep 1: SET bits
20	**GPIO20**	GPIO20_R0	**Bitwise SET operation of GPIO20 R0** 0: Keep 1: SET bits
19	**GPIO19**	GPIO19_R0	**Bitwise SET operation of GPIO19 R0** 0: Keep 1: SET bits
18	**GPIO18**	GPIO18_R0	**Bitwise SET operation of GPIO18 R0** 0: Keep 1: SET bits
17	**GPIO17**	GPIO17_R0	**Bitwise SET operation of GPIO17 R0** 0: Keep 1: SET bits
16	**GPIO16**	GPIO16_R0	**Bitwise SET operation of GPIO16 R0** 0: Keep 1: SET bits
15	**GPIO15**	GPIO15_R0	**Bitwise SET operation of GPIO15 R0** 0: Keep 1: SET bits

This document contains information that is proprietary to MediaTek Inc.
Unauthorized reproduction or disclosure of this information in whole or in part is strictly prohibited.
MEDIATEK CONFIDENTIAL FOR dengzhenli@ farsightedmobile.com USE ONLY

Bit(s)	Mnemonic	Name	Description
14	**GPIO14**	GPIO14_R0	**Bitwise SET operation of GPIO14 R0** 0: Keep 1: SET bits
13	**GPIO13**	GPIO13_R0	**Bitwise SET operation of GPIO13 R0** 0: Keep 1: SET bits
12	**GPIO12**	GPIO12_R0	**Bitwise SET operation of GPIO12 R0** 0: Keep 1: SET bits
10	**GPIO10**	GPIO10_R0	**Bitwise SET operation of GPIO10 R0** 0: Keep 1: SET bits

A0020B08 **GPIO_RESEN0_0_CLR** **GPIO R0 Control** **00000000**

Bit	31	30	29	28	27	26	25	24	23	22	21	20	19	18	17	16
Name	**GPIO31**		**GPIO29**	**GPIO28**	**GPIO27**	**GPIO26**					**GPIO21**	**GPIO20**	**GPIO19**	**GPIO18**	**GPIO17**	**GPIO16**
Type	WO		WO	WO	WO	WO					WO	WO	WO	WO	WO	WO
Reset	0		0	0	0	0					0	0	0	0	0	0
Bit	15	14	13	12	11	10	9	8	7	6	5	4	3	2	1	0
Name	**GPIO15**	**GPIO14**	**GPIO13**	**GPIO12**		**GPIO10**										
Type	WO	WO	WO	WO		WO										
Reset	0	0	0	0		0										

Overview: For bitwise access of GPIO_RESEN0_0

Bit(s)	Mnemonic	Name	Description
31	**GPIO31**	GPIO31_R0	**Bitwise CLR operation of GPIO31 R0** 0: Keep 1: CLR bits
29	**GPIO29**	GPIO29_R0	**Bitwise CLR operation of GPIO29 R0** 0: Keep 1: CLR bits
28	**GPIO28**	GPIO28_R0	**Bitwise CLR operation of GPIO28 R0** 0: Keep 1: CLR bits
27	**GPIO27**	GPIO27_R0	**Bitwise CLR operation of GPIO27 R0** 0: Keep 1: CLR bits
26	**GPIO26**	GPIO26_R0	**Bitwise CLR operation of GPIO26 R0** 0: Keep 1: CLR bits
21	**GPIO21**	GPIO21_R0	**Bitwise CLR operation of GPIO21 R0** 0: Keep 1: CLR bits
20	**GPIO20**	GPIO20_R0	**Bitwise CLR operation of GPIO20 R0** 0: Keep 1: CLR bits
19	**GPIO19**	GPIO19_R0	**Bitwise CLR operation of GPIO19 R0**

MEDIATEK CONFIDENTIAL FOR dengzhenli@ farsightecmobile.com USE ONLY

This document contains information that is proprietary to MediaTek Inc.
Unauthorized reproduction or disclosure of this information in whole or in part is strictly prohibited.

Bit(s)	Mnemonic	Name	Description
			0: Keep 1: CLR bits
18	**GPIO18**	GPIO18_R0	**Bitwise CLR operation of GPIO18 R0** 0: Keep 1: CLR bits
17	**GPIO17**	GPIO17_R0	**Bitwise CLR operation of GPIO17 R0** 0: Keep 1: CLR bits
16	**GPIO16**	GPIO16_R0	**Bitwise CLR operation of GPIO16 R0** 0: Keep 1: CLR bits
15	**GPIO15**	GPIO15_R0	**Bitwise CLR operation of GPIO15 R0** 0: Keep 1: CLR bits
14	**GPIO14**	GPIO14_R0	**Bitwise CLR operation of GPIO14 R0** 0: Keep 1: CLR bits
13	**GPIO13**	GPIO13_R0	**Bitwise CLR operation of GPIO13 R0** 0: Keep 1: CLR bits
12	**GPIO12**	GPIO12_R0	**Bitwise CLR operation of GPIO12 R0** 0: Keep 1: CLR bits
10	**GPIO10**	GPIO10_R0	**Bitwise CLR operation of GPIO10 R0** 0: Keep 1: CLR bits

A0020B10 **GPIO_RESEN01** **GPIO R0 Control** **0007A7FF**

Bit	31	30	29	28	27	26	25	24	23	22	21	20	19	18	17	16
Name													**GPIO51**	**GPIO50**	**GPIO49**	**GPIO48**
Type													RW	RW	RW	RW
Reset													0	1	1	1
Bit	15	14	13	12	11	10	9	8	7	6	5	4	3	2	1	0
Name	**GPIO47**	**GPIO46**	**GPIO45**			**GPIO42**	**GPIO41**	**GPIO40**	**GPIO39**	**GPIO38**	**GPIO37**	**GPIO36**	**GPIO35**	**GPIO34**	**GPIO33**	**GPIO32**
Type	RW	RW	RW			RW	RW	RW	RW	RW	RW	RW	RW	RW	RW	RW
Reset	1	0	1			1	1	1	1	1	1	1	1	1	1	1

Overview: Configures GPIO R0 control

Bit(s)	Mnemonic	Name	Description
19	**GPIO51**	GPIO51_R0	**R0 for GPIO51** 0: Disable 1: Enable
18	**GPIO50**	GPIO50_R0	**R0 for GPIO50** 0: Disable 1: Enable
17	**GPIO49**	GPIO49_R0	**R0 for GPIO49** 0: Disable

This document contains information that is proprietary to MediaTek Inc.
Unauthorized reproduction or disclosure of this information in whole or in part is strictly prohibited.
MEDIATEK CONFIDENTIAL FOR dengzhenli@far-sightedmobile.com USE ONLY

Bit(s)	Mnemonic	Name	Description
			1: Enable
16	**GPIO48**	GPIO48_R0	**R0 for GPIO48** 0: Disable 1: Enable
15	**GPIO47**	GPIO47_R0	**R0 for GPIO47** 0: Disable 1: Enable
14	**GPIO46**	GPIO46_R0	**R0 for GPIO46** 0: Disable 1: Enable
13	**GPIO45**	GPIO45_R0	**R0 for GPIO45** 0: Disable 1: Enable
10	**GPIO42**	GPIO42_R0	**R0 for GPIO42** 0: Disable 1: Enable
9	**GPIO41**	GPIO41_R0	**R0 for GPIO41** 0: Disable 1: Enable
8	**GPIO40**	GPIO40_R0	**R0 for GPIO40** 0: Disable 1: Enable
7	**GPIO39**	GPIO39_R0	**R0 for GPIO39** 0: Disable 1: Enable
6	**GPIO38**	GPIO38_R0	**R0 for GPIO38** 0: Disable 1: Enable
5	**GPIO37**	GPIO37_R0	**R0 for GPIO37** 0: Disable 1: Enable
4	**GPIO36**	GPIO36_R0	**R0 for GPIO36** 0: Disable 1: Enable
3	**GPIO35**	GPIO35_R0	**R0 for GPIO35** 0: Disable 1: Enable
2	**GPIO34**	GPIO34_R0	**R0 for GPIO34** 0: Disable 1: Enable
1	**GPIO33**	GPIO33_R0	**R0 for GPIO33** 0: Disable 1: Enable
0	**GPIO32**	GPIO32_R0	**R0 for GPIO32** 0: Disable 1: Enable

A0020B14 **GPIO_RESEN0_1_SET** **GPIO R0 Control** **00000000**

Bit	31	30	29	28	27	26	25	24	23	22	21	20	19	18	17	16

MEDIATEK CONFIDENTIAL
FOR dengzhenli@ farsightedmobile.com USE ONLY

This document contains information that is proprietary to MediaTek Inc.
Unauthorized reproduction or disclosure of this information in whole or in part is strictly prohibited.

Name													GPIO51	GPIO50	GPIO49	GPIO48
Type													WO	WO	WO	WO
Reset													0	0	0	0
Bit	15	14	13	12	11	10	9	8	7	6	5	4	3	2	1	0
Name	GPIO47	GPIO46	GPIO45			GPIO42	GPIO41	GPIO40	GPIO39	GPIO38	GPIO37	GPIO36	GPIO35	GPIO34	GPIO33	GPIO32
Type	WO	WO	WO			WO	WO	WO	WO	WO	WO	WO	WO	WO	WO	WO
Reset	0	0	0			0	0	0	0	0	0	0	0	0	0	0

Overview: For bitwise access of GPIO_RESEN0_1

Bit(s)	Mnemonic	Name	Description
19	**GPIO51**	GPIO51_R0	**Bitwise SET operation of GPIO51 R0** 0: Keep 1: SET bits
18	**GPIO50**	GPIO50_R0	**Bitwise SET operation of GPIO50 R0** 0: Keep 1: SET bits
17	**GPIO49**	GPIO49_R0	**Bitwise SET operation of GPIO49 R0** 0: Keep 1: SET bits
16	**GPIO48**	GPIO48_R0	**Bitwise SET operation of GPIO48 R0** 0: Keep 1: SET bits
15	**GPIO47**	GPIO47_R0	**Bitwise SET operation of GPIO47 R0** 0: Keep 1: SET bits
14	**GPIO46**	GPIO46_R0	**Bitwise SET operation of GPIO46 R0** 0: Keep 1: SET bits
13	**GPIO45**	GPIO45_R0	**Bitwise SET operation of GPIO45 R0** 0: Keep 1: SET bits
10	**GPIO42**	GPIO42_R0	**Bitwise SET operation of GPIO42 R0** 0: Keep 1: SET bits
9	**GPIO41**	GPIO41_R0	**Bitwise SET operation of GPIO41 R0** 0: Keep 1: SET bits
8	**GPIO40**	GPIO40_R0	**Bitwise SET operation of GPIO40 R0** 0: Keep 1: SET bits
7	**GPIO39**	GPIO39_R0	**Bitwise SET operation of GPIO39 R0** 0: Keep 1: SET bits
6	**GPIO38**	GPIO38_R0	**Bitwise SET operation of GPIO38 R0** 0: Keep 1: SET bits
5	**GPIO37**	GPIO37_R0	**Bitwise SET operation of GPIO37 R0** 0: Keep 1: SET bits
4	**GPIO36**	GPIO36_R0	**Bitwise SET operation of GPIO36 R0** 0: Keep

This document contains information that is proprietary to MediaTek Inc.
Unauthorized reproduction or disclosure of this information in whole or in part is strictly prohibited.
MEDIATEK CONFIDENTIAL FOR dengzhenli@ fareastedmobile.com USE ONLY

Bit(s)	Mnemonic	Name	Description
			1: SET bits
3	**GPIO35**	GPIO35_R0	**Bitwise SET operation of GPIO35 R0** 0: Keep 1: SET bits
2	**GPIO34**	GPIO34_R0	**Bitwise SET operation of GPIO34 R0** 0: Keep 1: SET bits
1	**GPIO33**	GPIO33_R0	**Bitwise SET operation of GPIO33 R0** 0: Keep 1: SET bits
0	**GPIO32**	GPIO32_R0	**Bitwise SET operation of GPIO32 R0** 0: Keep 1: SET bits

A0020B18 **GPIO_RESEN0_1_CLR** **GPIO R0 Control** **00000000**

Bit	31	30	29	28	27	26	25	24	23	22	21	20	19	18	17	16
Name													GPIO51	GPIO50	GPIO49	GPIO48
Type													WO	WO	WO	WO
Reset													0	0	0	0
Bit	15	14	13	12	11	10	9	8	7	6	5	4	3	2	1	0
Name	GPIO47	GPIO46	GPIO45			GPIO42	GPIO41	GPIO40	GPIO39	GPIO38	GPIO37	GPIO36	GPIO35	GPIO34	GPIO33	GPIO32
Type	WO	WO	WO			WO	WO	WO	WO	WO	WO	WO	WO	WO	WO	WO
Reset	0	0	0			0	0	0	0	0	0	0	0	0	0	0

Overview: For bitwise access of GPIO_RESEN0_1

Bit(s)	Mnemonic	Name	Description
19	**GPIO51**	GPIO51_R0	**Bitwise CLR operation of GPIO51 R0** 0: Keep 1: CLR bits
18	**GPIO50**	GPIO50_R0	**Bitwise CLR operation of GPIO50 R0** 0: Keep 1: CLR bits
17	**GPIO49**	GPIO49_R0	**Bitwise CLR operation of GPIO49 R0** 0: Keep 1: CLR bits
16	**GPIO48**	GPIO48_R0	**Bitwise CLR operation of GPIO48 R0** 0: Keep 1: CLR bits
15	**GPIO47**	GPIO47_R0	**Bitwise CLR operation of GPIO47 R0** 0: Keep 1: CLR bits
14	**GPIO46**	GPIO46_R0	**Bitwise CLR operation of GPIO46 R0** 0: Keep 1: CLR bits
13	**GPIO45**	GPIO45_R0	**Bitwise CLR operation of GPIO45 R0** 0: Keep 1: CLR bits

This document contains information that is proprietary to MediaTek Inc.
Unauthorized reproduction or disclosure of this information in whole or in part is strictly prohibited.
MEDIATEK CONFIDENTIAL FOR dengzhenli@ farsightdmobile.com USE ONLY

Bit(s)	Mnemonic	Name	Description
10	**GPIO42**	GPIO42_R0	**Bitwise CLR operation of GPIO42 R0** 0: Keep 1: CLR bits
9	**GPIO41**	GPIO41_R0	**Bitwise CLR operation of GPIO41 R0** 0: Keep 1: CLR bits
8	**GPIO40**	GPIO40_R0	**Bitwise CLR operation of GPIO40 R0** 0: Keep 1: CLR bits
7	**GPIO39**	GPIO39_R0	**Bitwise CLR operation of GPIO39 R0** 0: Keep 1: CLR bits
6	**GPIO38**	GPIO38_R0	**Bitwise CLR operation of GPIO38 R0** 0: Keep 1: CLR bits
5	**GPIO37**	GPIO37_R0	**Bitwise CLR operation of GPIO37 R0** 0: Keep 1: CLR bits
4	**GPIO36**	GPIO36_R0	**Bitwise CLR operation of GPIO36 R0** 0: Keep 1: CLR bits
3	**GPIO35**	GPIO35_R0	**Bitwise CLR operation of GPIO35 R0** 0: Keep 1: CLR bits
2	**GPIO34**	GPIO34_R0	**Bitwise CLR operation of GPIO34 R0** 0: Keep 1: CLR bits
1	**GPIO33**	GPIO33_R0	**Bitwise CLR operation of GPIO33 R0** 0: Keep 1: CLR bits
0	**GPIO32**	GPIO32_R0	**Bitwise CLR operation of GPIO32 R0** 0: Keep 1: CLR bits

A0020B20 **GPIO_RESEN1_0** **GPIO R1 Control** **00000000**

Bit	31	30	29	28	27	26	25	24	23	22	21	20	19	18	17	16
Name	**GPIO31**		**GPIO29**	**GPIO28**	**GPIO27**	**GPIO26**					**GPIO21**	**GPIO20**	**GPIO19**	**GPIO18**	**GPIO17**	**GPIO16**
Type	RW		RW	RW	RW	RW					RW	RW	RW	RW	RW	RW
Reset	0		0	0	0	0					0	0	0	0	0	0
Bit	15	14	13	12	11	10	9	8	7	6	5	4	3	2	1	0
Name	**GPIO15**	**GPIO14**	**GPIO13**	**GPIO12**		**GPIO10**										
Type	RW	RW	RW	RW		RW										
Reset	0	0	0	0		0										

Overview: Configures GPIO R1 control

Bit(s)	Mnemonic	Name	Description
31	**GPIO31**	GPIO31_R1	**R1 for GPIO31**

This document contains information that is proprietary to MediaTek Inc.
Unauthorized reproduction or disclosure of this information in whole or in part is strictly prohibited.
MEDIATEK CONFIDENTIAL FOR dengzhen@far-sightedmobile.com USE ONLY

Bit(s)	Mnemonic	Name	Description
			0: Disable 1: Enable
29	**GPIO29**	GPIO29_R1	**R1 for GPIO29** 0: Disable 1: Enable
28	**GPIO28**	GPIO28_R1	**R1 for GPIO28** 0: Disable 1: Enable
27	**GPIO27**	GPIO27_R1	**R1 for GPIO27** 0: Disable 1: Enable
26	**GPIO26**	GPIO26_R1	**R1 for GPIO26** 0: Disable 1: Enable
21	**GPIO21**	GPIO21_R1	**R1 for GPIO21** 0: Disable 1: Enable
20	**GPIO20**	GPIO20_R1	**R1 for GPIO20** 0: Disable 1: Enable
19	**GPIO19**	GPIO19_R1	**R1 for GPIO19** 0: Disable 1: Enable
18	**GPIO18**	GPIO18_R1	**R1 for GPIO18** 0: Disable 1: Enable
17	**GPIO17**	GPIO17_R1	**R1 for GPIO17** 0: Disable 1: Enable
16	**GPIO16**	GPIO16_R1	**R1 for GPIO16** 0: Disable 1: Enable
15	**GPIO15**	GPIO15_R1	**R1 for GPIO15** 0: Disable 1: Enable
14	**GPIO14**	GPIO14_R1	**R1 for GPIO14** 0: Disable 1: Enable
13	**GPIO13**	GPIO13_R1	**R1 for GPIO13** 0: Disable 1: Enable
12	**GPIO12**	GPIO12_R1	**R1 for GPIO12** 0: Disable 1: Enable
10	**GPIO10**	GPIO10_R1	**R1 for GPIO10** 0: Disable 1: Enable

A0020B24 **GPIO_RESEN1_0_SET** **GPIO R1 Control** **00000000**

This document contains information that is proprietary to MediaTek Inc.
Unauthorized reproduction or disclosure of this information in whole or in part is strictly prohibited.
MEDIATEK CONFIDENTIAL FOR dengzhenli@ fartsightedmobile.com USE ONLY

Bit	31	30	29	28	27	26	25	24	23	22	21	20	19	18	17	16
Name	**GPIO31**		**GPIO29**	**GPIO28**	**GPIO27**	**GPIO26**					**GPIO21**	**GPIO20**	**GPIO19**	**GPIO18**	**GPIO17**	**GPIO16**
Type	WO		WO	WO	WO	WO					WO	WO	WO	WO	WO	WO
Reset	0		0	0	0	0					0	0	0	0	0	0
Bit	15	14	13	12	11	10	9	8	7	6	5	4	3	2	1	0
Name	**GPIO15**	**GPIO14**	**GPIO13**	**GPIO12**		**GPIO10**										
Type	WO	WO	WO	WO		WO										
Reset	0	0	0	0		0										

Overview: For bitwise access of GPIO_RESEN1_0

Bit(s)	Mnemonic	Name	Description
31	**GPIO31**	GPIO31_R1	**Bitwise SET operation of GPIO31 R1** 0: Keep 1: SET bits
29	**GPIO29**	GPIO29_R1	**Bitwise SET operation of GPIO29 R1** 0: Keep 1: SET bits
28	**GPIO28**	GPIO28_R1	**Bitwise SET operation of GPIO28 R1** 0: Keep 1: SET bits
27	**GPIO27**	GPIO27_R1	**Bitwise SET operation of GPIO27 R1** 0: Keep 1: SET bits
26	**GPIO26**	GPIO26_R1	**Bitwise SET operation of GPIO26 R1** 0: Keep 1: SET bits
21	**GPIO21**	GPIO21_R1	**Bitwise SET operation of GPIO21 R1** 0: Keep 1: SET bits
20	**GPIO20**	GPIO20_R1	**Bitwise SET operation of GPIO20 R1** 0: Keep 1: SET bits
19	**GPIO19**	GPIO19_R1	**Bitwise SET operation of GPIO19 R1** 0: Keep 1: SET bits
18	**GPIO18**	GPIO18_R1	**Bitwise SET operation of GPIO18 R1** 0: Keep 1: SET bits
17	**GPIO17**	GPIO17_R1	**Bitwise SET operation of GPIO17 R1** 0: Keep 1: SET bits
16	**GPIO16**	GPIO16_R1	**Bitwise SET operation of GPIO16 R1** 0: Keep 1: SET bits
15	**GPIO15**	GPIO15_R1	**Bitwise SET operation of GPIO15 R1** 0: Keep 1: SET bits
14	**GPIO14**	GPIO14_R1	**Bitwise SET operation of GPIO14 R1** 0: Keep 1: SET bits
13	**GPIO13**	GPIO13_R1	**Bitwise SET operation of GPIO13 R1**

This document contains information that is proprietary to MediaTek Inc.
Unauthorized reproduction or disclosure of this information in whole or in part is strictly prohibited.
MEDIATEK CONFIDENTIAL FOR dengzhenli@ farsightedmobile.com USE ONLY

Bit(s)	Mnemonic	Name	Description
			0: Keep 1: SET bits
12	**GPIO12**	GPIO12_R1	**Bitwise SET operation of GPIO12 R1** 0: Keep 1: SET bits
10	**GPIO10**	GPIO10_R1	**Bitwise SET operation of GPIO10 R1** 0: Keep 1: SET bits

A0020B28 **GPIO_RESEN1_0_CLR** **GPIO R1 Control** **00000000**

Bit	31	30	29	28	27	26	25	24	23	22	21	20	19	18	17	16
Name	**GPIO31**		**GPIO29**	**GPIO28**	**GPIO27**	**GPIO26**					**GPIO21**	**GPIO20**	**GPIO19**	**GPIO18**	**GPIO17**	**GPIO16**
Type	WO		WO	WO	WO	WO					WO	WO	WO	WO	WO	WO
Reset	0		0	0	0	0					0	0	0	0	0	0
Bit	15	14	13	12	11	10	9	8	7	6	5	4	3	2	1	0
Name	**GPIO15**	**GPIO14**	**GPIO13**	**GPIO12**		**GPIO10**										
Type	WO	WO	WO	WO		WO										
Reset	0	0	0	0		0										

Overview: For bitwise access of GPIO_RESEN1_0

Bit(s)	Mnemonic	Name	Description
31	**GPIO31**	GPIO31_R1	**Bitwise CLR operation of GPIO31 R1** 0: Keep 1: CLR bits
29	**GPIO29**	GPIO29_R1	**Bitwise CLR operation of GPIO29 R1** 0: Keep 1: CLR bits
28	**GPIO28**	GPIO28_R1	**Bitwise CLR operation of GPIO28 R1** 0: Keep 1: CLR bits
27	**GPIO27**	GPIO27_R1	**Bitwise CLR operation of GPIO27 R1** 0: Keep 1: CLR bits
26	**GPIO26**	GPIO26_R1	**Bitwise CLR operation of GPIO26 R1** 0: Keep 1: CLR bits
21	**GPIO21**	GPIO21_R1	**Bitwise CLR operation of GPIO21 R1** 0: Keep 1: CLR bits
20	**GPIO20**	GPIO20_R1	**Bitwise CLR operation of GPIO20 R1** 0: Keep 1: CLR bits
19	**GPIO19**	GPIO19_R1	**Bitwise CLR operation of GPIO19 R1** 0: Keep 1: CLR bits
18	**GPIO18**	GPIO18_R1	**Bitwise CLR operation of GPIO18 R1** 0: Keep

This document contains information that is proprietary to MediaTek Inc.
Unauthorized reproduction or disclosure of this information in whole or in part is strictly prohibited.

Bit(s)	Mnemonic	Name	Description
			1: CLR bits
17	**GPIO17**	GPIO17_R1	**Bitwise CLR operation of GPIO17 R1** 0: Keep 1: CLR bits
16	**GPIO16**	GPIO16_R1	**Bitwise CLR operation of GPIO16 R1** 0: Keep 1: CLR bits
15	**GPIO15**	GPIO15_R1	**Bitwise CLR operation of GPIO15 R1** 0: Keep 1: CLR bits
14	**GPIO14**	GPIO14_R1	**Bitwise CLR operation of GPIO14 R1** 0: Keep 1: CLR bits
13	**GPIO13**	GPIO13_R1	**Bitwise CLR operation of GPIO13 R1** 0: Keep 1: CLR bits
12	**GPIO12**	GPIO12_R1	**Bitwise CLR operation of GPIO12 R1** 0: Keep 1: CLR bits
10	**GPIO10**	GPIO10_R1	**Bitwise CLR operation of GPIO10 R1** 0: Keep 1: CLR bits

A0020B30 **GPIO_RESEN1_1** **GPIO R1 Control** **00000000**

Bit	31	30	29	28	27	26	25	24	23	22	21	20	19	18	17	16
Name													**GPIO51**	**GPIO50**	**GPIO49**	**GPIO48**
Type													RW	RW	RW	RW
Reset													0	0	0	0
Bit	15	14	13	12	11	10	9	8	7	6	5	4	3	2	1	0
Name	**GPIO47**	**GPIO46**	**GPIO45**			**GPIO42**	**GPIO41**	**GPIO40**	**GPIO39**	**GPIO38**	**GPIO37**	**GPIO36**	**GPIO35**	**GPIO34**	**GPIO33**	**GPIO32**
Type	RW	RW	RW			RW	RW	RW	RW	RW	RW	RW	RW	RW	RW	RW
Reset	0	0	0			0	0	0	0	0	0	0	0	0	0	0

Overview: Configures GPIO R1 control

Bit(s)	Mnemonic	Name	Description
19	**GPIO51**	GPIO51_R1	**R1 for GPIO51** 0: Disable 1: Enable
18	**GPIO50**	GPIO50_R1	**R1 for GPIO50** 0: Disable 1: Enable
17	**GPIO49**	GPIO49_R1	**R1 for GPIO49** 0: Disable 1: Enable
16	**GPIO48**	GPIO48_R1	**R1 for GPIO48** 0: Disable 1: Enable

This document contains information that is proprietary to MediaTek Inc.
Unauthorized reproduction or disclosure of this information in whole or in part is strictly prohibited.
MEDIATEK CONFIDENTIAL FOR dengzhenli@fairsightedmobile.com USE ONLY

Bit(s)	Mnemonic	Name	Description
15	**GPIO47**	GPIO47_R1	**R1 for GPIO47** 0: Disable 1: Enable
14	**GPIO46**	GPIO46_R1	**R1 for GPIO46** 0: Disable 1: Enable
13	**GPIO45**	GPIO45_R1	**R1 for GPIO45** 0: Disable 1: Enable
10	**GPIO42**	GPIO42_R1	**R1 for GPIO42** 0: Disable 1: Enable
9	**GPIO41**	GPIO41_R1	**R1 for GPIO41** 0: Disable 1: Enable
8	**GPIO40**	GPIO40_R1	**R1 for GPIO40** 0: Disable 1: Enable
7	**GPIO39**	GPIO39_R1	**R1 for GPIO39** 0: Disable 1: Enable
6	**GPIO38**	GPIO38_R1	**R1 for GPIO38** 0: Disable 1: Enable
5	**GPIO37**	GPIO37_R1	**R1 for GPIO37** 0: Disable 1: Enable
4	**GPIO36**	GPIO36_R1	**R1 for GPIO36** 0: Disable 1: Enable
3	**GPIO35**	GPIO35_R1	**R1 for GPIO35** 0: Disable 1: Enable
2	**GPIO34**	GPIO34_R1	**R1 for GPIO34** 0: Disable 1: Enable
1	**GPIO33**	GPIO33_R1	**R1 for GPIO33** 0: Disable 1: Enable
0	**GPIO32**	GPIO32_R1	**R1 for GPIO32** 0: Disable 1: Enable

A0020B34 **GPIO_RESEN1_1_SET** **GPIO R1 Control** **00000000**

Bit	31	30	29	28	27	26	25	24	23	22	21	20	19	18	17	16
Name													**GPIO51**	**GPIO50**	**GPIO49**	**GPIO48**
Type													WO	WO	WO	WO
Reset													0	0	0	0
Bit	15	14	13	12	11	10	9	8	7	6	5	4	3	2	1	0

This document contains information that is proprietary to MediaTek Inc.
Unauthorized reproduction or disclosure of this information in whole or in part is strictly prohibited.
MEDIATEK CONFIDENTIAL FOR dengzhenli@ farsightedmobile.com USE ONLY

Name	GPIO47	GPIO46	GPIO45			GPIO42	GPIO41	GPIO40	GPIO39	GPIO38	GPIO37	GPIO36	GPIO35	GPIO34	GPIO33	GPIO32
Type	WO	WO	WO			WO	WO	WO	WO	WO	WO	WO	WO	WO	WO	WO
Reset	0	0	0			0	0	0	0	0	0	0	0	0	0	0

Overview: For bitwise access of GPIO_RESEN1_1

Bit(s)	Mnemonic	Name	Description
19	**GPIO51**	GPIO51_R1	**Bitwise SET operation of GPIO51 R1** 0: Keep 1: SET bits
18	**GPIO50**	GPIO50_R1	**Bitwise SET operation of GPIO50 R1** 0: Keep 1: SET bits
17	**GPIO49**	GPIO49_R1	**Bitwise SET operation of GPIO49 R1** 0: Keep 1: SET bits
16	**GPIO48**	GPIO48_R1	**Bitwise SET operation of GPIO48 R1** 0: Keep 1: SET bits
15	**GPIO47**	GPIO47_R1	**Bitwise SET operation of GPIO47 R1** 0: Keep 1: SET bits
14	**GPIO46**	GPIO46_R1	**Bitwise SET operation of GPIO46 R1** 0: Keep 1: SET bits
13	**GPIO45**	GPIO45_R1	**Bitwise SET operation of GPIO45 R1** 0: Keep 1: SET bits
10	**GPIO42**	GPIO42_R1	**Bitwise SET operation of GPIO42 R1** 0: Keep 1: SET bits
9	**GPIO41**	GPIO41_R1	**Bitwise SET operation of GPIO41 R1** 0: Keep 1: SET bits
8	**GPIO40**	GPIO40_R1	**Bitwise SET operation of GPIO40 R1** 0: Keep 1: SET bits
7	**GPIO39**	GPIO39_R1	**Bitwise SET operation of GPIO39 R1** 0: Keep 1: SET bits
6	**GPIO38**	GPIO38_R1	**Bitwise SET operation of GPIO38 R1** 0: Keep 1: SET bits
5	**GPIO37**	GPIO37_R1	**Bitwise SET operation of GPIO37 R1** 0: Keep 1: SET bits
4	**GPIO36**	GPIO36_R1	**Bitwise SET operation of GPIO36 R1** 0: Keep 1: SET bits
3	**GPIO35**	GPIO35_R1	**Bitwise SET operation of GPIO35 R1** 0: Keep 1: SET bits

This document contains information that is proprietary to MediaTek Inc.
Unauthorized reproduction or disclosure of this information in whole or in part is strictly prohibited.
MEDIATEK CONFIDENTIAL FOR dengzhenli@ far-sightedmobile.com USE ONLY

Bit(s)	Mnemonic	Name	Description
2	**GPIO34**	GPIO34_R1	**Bitwise SET operation of GPIO34 R1** 0: Keep 1: SET bits
1	**GPIO33**	GPIO33_R1	**Bitwise SET operation of GPIO33 R1** 0: Keep 1: SET bits
0	**GPIO32**	GPIO32_R1	**Bitwise SET operation of GPIO32 R1** 0: Keep 1: SET bits

A0020B38 <u>**GPIO_RESEN1_1_CLR**</u> **GPIO R1 Control** **00000000**

Bit	31	30	29	28	27	26	25	24	23	22	21	20	19	18	17	16
Name													**GPIO51**	**GPIO50**	**GPIO49**	**GPIO48**
Type													WO	WO	WO	WO
Reset													0	0	0	0
Bit	15	14	13	12	11	10	9	8	7	6	5	4	3	2	1	0
Name	**GPIO47**	**GPIO46**	**GPIO45**			**GPIO42**	**GPIO41**	**GPIO40**	**GPIO39**	**GPIO38**	**GPIO37**	**GPIO36**	**GPIO35**	**GPIO34**	**GPIO33**	**GPIO32**
Type	WO	WO	WO			WO	WO	WO	WO	WO	WO	WO	WO	WO	WO	WO
Reset	0	0	0			0	0	0	0	0	0	0	0	0	0	0

Overview: For bitwise access of GPIO_RESEN1_1

Bit(s)	Mnemonic	Name	Description
19	**GPIO51**	GPIO51_R1	**Bitwise CLR operation of GPIO51 R1** 0: Keep 1: CLR bits
18	**GPIO50**	GPIO50_R1	**Bitwise CLR operation of GPIO50 R1** 0: Keep 1: CLR bits
17	**GPIO49**	GPIO49_R1	**Bitwise CLR operation of GPIO49 R1** 0: Keep 1: CLR bits
16	**GPIO48**	GPIO48_R1	**Bitwise CLR operation of GPIO48 R1** 0: Keep 1: CLR bits
15	**GPIO47**	GPIO47_R1	**Bitwise CLR operation of GPIO47 R1** 0: Keep 1: CLR bits
14	**GPIO46**	GPIO46_R1	**Bitwise CLR operation of GPIO46 R1** 0: Keep 1: CLR bits
13	**GPIO45**	GPIO45_R1	**Bitwise CLR operation of GPIO45 R1** 0: Keep 1: CLR bits
10	**GPIO42**	GPIO42_R1	**Bitwise CLR operation of GPIO42 R1** 0: Keep 1: CLR bits
9	**GPIO41**	GPIO41_R1	**Bitwise CLR operation of GPIO41 R1**

MEDIATEK CONFIDENTIAL FOR dengzhenli@farsightedmobile.com USE ONLY

This document contains information that is proprietary to MediaTek Inc.
Unauthorized reproduction or disclosure of this information in whole or in part is strictly prohibited.

Bit(s)	Mnemonic	Name	Description
			0: Keep 1: CLR bits
8	**GPIO40**	GPIO40_R1	**Bitwise CLR operation of GPIO40 R1** 0: Keep 1: CLR bits
7	**GPIO39**	GPIO39_R1	**Bitwise CLR operation of GPIO39 R1** 0: Keep 1: CLR bits
6	**GPIO38**	GPIO38_R1	**Bitwise CLR operation of GPIO38 R1** 0: Keep 1: CLR bits
5	**GPIO37**	GPIO37_R1	**Bitwise CLR operation of GPIO37 R1** 0: Keep 1: CLR bits
4	**GPIO36**	GPIO36_R1	**Bitwise CLR operation of GPIO36 R1** 0: Keep 1: CLR bits
3	**GPIO35**	GPIO35_R1	**Bitwise CLR operation of GPIO35 R1** 0: Keep 1: CLR bits
2	**GPIO34**	GPIO34_R1	**Bitwise CLR operation of GPIO34 R1** 0: Keep 1: CLR bits
1	**GPIO33**	GPIO33_R1	**Bitwise CLR operation of GPIO33 R1** 0: Keep 1: CLR bits
0	**GPIO32**	GPIO32_R1	**Bitwise CLR operation of GPIO32 R1** 0: Keep 1: CLR bits

KeyPad

KCOL0-4

PUPD	R1	R0	WEAK PULL UP/DOWN STATE
0	0	0	Disable both resistors
0	0	1	PU-36K ohms
0	1	0	PU-1200K ohms
0	1	1	PU- 1200K//36K ohms
1	0	0	Disable both resistors
1	0	1	PD-36K ohms
1	1	0	PD-1200K ohms
1	1	1	PD- 1200K//36K ohms

KROW0-4

PUPD	R1	R0	WEAK PULL UP/DOWN STATE
0	0	0	Disable both resistors
0	0	1	PU-36K ohms
0	1	0	PU-1K ohms

This document contains information that is proprietary to MediaTek Inc.
Unauthorized reproduction or disclosure of this information in whole or in part is strictly prohibited.
MEDIATEK CONFIDENTIAL FOR dengzheni@far-sightedmobile.com USE ONLY

PUPD	R1	R0	WEAK PULL UP/DOWN STATE
0	1	1	PU- 1K//36K ohms
1	0	0	Disable both resistors
1	0	1	PD-36K ohms
1	1	0	PD-1K ohms
1	1	1	PD- 1K//36K ohms

URXD:
CMPDN/CMCSD0/CMCSD1/CMMCLK
MCCK/MCCM0/MCDA0/MCDA1/MCDA2/MCDA3
LSRSTB/LSCE_B/LSCK/LSDA/LSA0/LPTE
RESETB:

PUPD	R1	R0	WEAK PULL UP/DOWN STATE
0	0	0	Disable both resistors
0	0	1	PU-47K ohms
0	1	0	PU-47K ohms
0	1	1	PU- 23.5K ohms
1	0	0	Disable both resistors
1	0	1	PD-47K ohms
1	1	0	PD-47K ohms
1	1	1	PD- 23.5K ohms

A0020C00 GPIO_MODE0 GPIO Mode Control 00000000

Bit	31	30	29	28	27	26	25	24	23	22	21	20	19	18	17	16
Name			**GPIO7**				**GPIO6**				**GPIO5**				**GPIO4**	
Type			RW				RW				RW				RW	
Reset		0	0	0		0	0	0		0	0	0		0	0	0
Bit	15	14	13	12	11	10	9	8	7	6	5	4	3	2	1	0
Name		**GPIO3**				**GPIO2**				**GPIO1**				**GPIO0**		
Type		RW				RW				RW				RW		
Reset	0	0	0	0	0	0	0	0	0	0	0	0	0	0	0	0

Overview: Configures GPIO aux. mode

Bit(s)	Mnemonic	Name	Description
30:28		GPIO7	**Aux. mode of GPIO_7** 0: GPIO7 (IO) 1: EINT6 (I) 2: Reserved 3: BPI_BUS5 (O) 4: Reserved 5: Reserved 6: Reserved 7: Reserved
26:24		GPIO6	**Aux. mode of GPIO_6** 0: GPIO6 (IO) 1: EINT5 (I)

MEDIATEK CONFIDENTIAL FOR dengzhenli@fae-sightedmobile.com USE ONLY

This document contains information that is proprietary to MediaTek Inc.
Unauthorized reproduction or disclosure of this information in whole or in part is strictly prohibited.

Bit(s)	Mnemonic	Name	Description
			2: MCINS (I) 3: BPI_BUS4 (O) 4: Reserved 5: Reserved 6: Reserved 7: Reserved
22:20		GPIO5	**Aux. mode of GPIO_5** 0: GPIO5 (IO) 1: EINT4 (I) 2: Reserved 3: BPI_BUS3 (O) 4: Reserved 5: Reserved 6: Reserved 7: Reserved
18:16		GPIO4	**Aux. mode of GPIO_4** 0: GPIO4 (IO) 1: EINT3 (I) 2: Reserved 3: Reserved 4: U1RTS (O) 5: Reserved 6: Reserved 7: Reserved
15:12		GPIO3	**Aux. mode of GPIO_3** 0: GPIO3 (IO) 1: MCINS (I) 2: YM (AIO) 3: Reserved 4: PWM1 (O) 5: CMCSD1 (I) 6: EDICK (O) 7: JTDO (O) 8: BTJTDO (O) 9: FMJTDO (O)
11:8		GPIO2	**Aux. mode of GPIO_2** 0: GPIO2 (IO) 1: EINT2 (I) 2: YP (AIO) 3: GPSFSYNC (O) 4: PWM0 (O) 5: CMCSD0 (I) 6: EDIWS (O) 7: JTRST_B (I) 8: BTJTRSTB (I) 9: FMJTRSTB (I)
7:4		GPIO1	**Aux. mode of GPIO_1** 0: GPIO1 (IO) 1: XM (AIO) 2: EINT1 (I) 3: U3TXD (O) 4: U1CTS (I) 5: CMMCLK (O) 6: EDIDI (I) 7: JTMS (I) 8: BTJTMS (I) 9: FMJTMS (I)
3:0		GPIO0	**Aux. mode of GPIO_0** 0: GPIO0 (IO)

This document contains information that is proprietary to MediaTek Inc.
Unauthorized reproduction or disclosure of this information in whole or in part is strictly prohibited.
MEDIATEK CONFIDENTIAL FOR dengzhenli@ far-sightedmobile.com USE ONLY

Bit(s)	Mnemonic	Name	Description
			1: EINT0 (I) 2: XP (AIO) 3: U3RXD (I) 4: CMCSD2 (I) 5: CMCSK (I) 6: EDIDO (O) 7: JTDI (I) 8: BTJTDI (I) 9: FMJTDI (I)

A0020C04 **GPIO_MODE0_SET** **GPIO Mode Control** **00000000**

Bit	31	30	29	28	27	26	25	24	23	22	21	20	19	18	17	16
Name		GPIO7				GPIO6				GPIO5				GPIO4		
Type		WO				WO				WO				WO		
Reset		0	0	0		0	0	0		0	0	0		0	0	0
Bit	15	14	13	12	11	10	9	8	7	6	5	4	3	2	1	0
Name	GPIO3				GPIO2				GPIO1				GPIO0			
Type	WO				WO				WO				WO			
Reset	0	0	0	0	0	0	0	0	0	0	0	0	0	0	0	0

Overview: For bitwise access of GPIO_MODE0

Bit(s)	Mnemonic	Name	Description
30:28		GPIO7	**Bitwise SET operation for Aux. mode of GPIO_7** 0: Keep 1: SET bits
26:24		GPIO6	**Bitwise SET operation for Aux. mode of GPIO_6** 0: Keep 1: SET bits
22:20		GPIO5	**Bitwise SET operation for Aux. mode of GPIO_5** 0: Keep 1: SET bits
18:16		GPIO4	**Bitwise SET operation for Aux. mode of GPIO_4** 0: Keep 1: SET bits
15:12		GPIO3	**Bitwise SET operation for Aux. mode of GPIO_3** 0: Keep 1: SET bits
11:8		GPIO2	**Bitwise SET operation for Aux. mode of GPIO_2** 0: Keep 1: SET bits
7:4		GPIO1	**Bitwise SET operation for Aux. mode of GPIO_1** 0: Keep 1: SET bits
3:0		GPIO0	**Bitwise SET operation for Aux. mode of GPIO_0** 0: Keep 1: SET bits

MEDIATEK CONFIDENTIAL FOR dengzhenli@ far-sightedmobile.com USE ONLY

This document contains information that is proprietary to MediaTek Inc.
Unauthorized reproduction or disclosure of this information in whole or in part is strictly prohibited.

A0020C08 GPIO_MODE0_CLR GPIO Mode Control 00000000

Bit	31	30	29	28	27	26	25	24	23	22	21	20	19	18	17	16
Name		**GPIO7**				**GPIO6**				**GPIO5**				**GPIO4**		
Type		WO				WO				WO				WO		
Reset		0	0	0		0	0	0		0	0	0		0	0	0
Bit	15	14	13	12	11	10	9	8	7	6	5	4	3	2	1	0
Name	**GPIO3**				**GPIO2**				**GPIO1**				**GPIO0**			
Type	WO				WO				WO				WO			
Reset	0	0	0	0	0	0	0	0	0	0	0	0	0	0	0	0

Overview: For bitwise access of GPIO_MODE0

Bit(s)	Mnemonic	Name	Description
30:28		GPIO7	**Bitwise CLR operation for Aux. mode of GPIO_7** 0: Keep 1: CLR bits
26:24		GPIO6	**Bitwise CLR operation for Aux. mode of GPIO_6** 0: Keep 1: CLR bits
22:20		GPIO5	**Bitwise CLR operation for Aux. mode of GPIO_5** 0: Keep 1: CLR bits
18:16		GPIO4	**Bitwise CLR operation for Aux. mode of GPIO_4** 0: Keep 1: CLR bits
15:12		GPIO3	**Bitwise CLR operation for Aux. mode of GPIO_3** 0: Keep 1: CLR bits
11:8		GPIO2	**Bitwise CLR operation for Aux. mode of GPIO_2** 0: Keep 1: CLR bits
7:4		GPIO1	**Bitwise CLR operation for Aux. mode of GPIO_1** 0: Keep 1: CLR bits
3:0		GPIO0	**Bitwise CLR operation for Aux. mode of GPIO_0** 0: Keep 1: CLR bits

A0020C10 GPIO_MODE1 GPIO Mode Control 00001100

Bit	31	30	29	28	27	26	25	24	23	22	21	20	19	18	17	16
Name		**GPIO15**				**GPIO14**				**GPIO13**				**GPIO12**		
Type		RW				RW				RW				RW		
Reset		0	0	0		0	0	0		0	0	0		0	0	0
Bit	15	14	13	12	11	10	9	8	7	6	5	4	3	2	1	0
Name		**GPIO11**				**GPIO10**				**GPIO9**				**GPIO8**		
Type		RW				RW				RW				RW		
Reset		0	0	1		0	0	1		0	0	0		0	0	0

Overview: Configures GPIO aux. mode

This document contains information that is proprietary to MediaTek Inc.
Unauthorized reproduction or disclosure of this information in whole or in part is strictly prohibited.

Bit(s)	Mnemonic	Name	Description
30:28		GPIO15	**Aux. mode of GPIO_15** 0: GPIO15 (IO) 1: KCOL1 (IO) 2: GPSFSYNC (O) 3: U1CTS (I) 4: FMJTCK (I) 5: JTCK (I) 6: BTJTCK (I) 7: Reserved
26:24		GPIO14	**Aux. mode of GPIO_14** 0: GPIO14 (IO) 1: KCOL2 (IO) 2: EINT12 (I) 3: U1RTS (I) 4: Reserved 5: Reserved 6: Reserved 7: Reserved
22:20		GPIO13	**Aux. mode of GPIO_13** 0: GPIO13 (IO) 1: KCOL3 (IO) 2: EINT11 (I) 3: PWM0 (O) 4: FMJTMS (I) 5: JTMS (I) 6: BTJTMS (I) 7: Reserved
18:16		GPIO12	**Aux. mode of GPIO_12** 0: GPIO12 (IO) 1: KCOL4 (IO) 2: U2RXD (I) 3: EDIDI (I) 4: FMJTDI (I) 5: JTDI (I) 6: BTJTDI (I) 7: Reserved
14:12		GPIO11	**Aux. mode of GPIO_11** 0: GPIO11 (IO) 1: U1TXD (O) 2: CMPDN (O) 3: EINT10 (I) 4: Reserved 5: Reserved 6: Reserved 7: Reserved
10:8		GPIO10	**Aux. mode of GPIO_10** 0: GPIO10 (IO) 1: U1RXD (I) 2: CMRST (O) 3: EINT9 (I) 4: MCINS (I) 5: Reserved 6: Reserved 7: Reserved
6:4		GPIO9	**Aux. mode of GPIO_9** 0: GPIO9 (IO) 1: EINT8 (I) 2: SDA (IO)

This document contains information that is proprietary to MediaTek Inc.
Unauthorized reproduction or disclosure of this information in whole or in part is strictly prohibited.
MEDIATEK CONFIDENTIAL FOR dengzhenli@ fari-sgtedmobile.com USE ONLY

Bit(s)	Mnemonic	Name	Description
			3: Reserved 4: Reserved 5: Reserved 6: Reserved 7: Reserved
2:0		GPIO8	**Aux. mode of GPIO_8** 0: GPIO8 (IO) 1: EINT7 (I) 2: SCL (IO) 3: Reserved 4: Reserved 5: Reserved 6: Reserved 7: Reserved

A0020C14 **GPIO_MODE1_SET** **GPIO Mode Control** **00000000**

Bit	31	30	29	28	27	26	25	24	23	22	21	20	19	18	17	16
Name		GPIO15				GPIO14				GPIO13				GPIO12		
Type		WO				WO				WO				WO		
Reset		0	0	0		0	0	0		0	0	0		0	0	0
Bit	15	14	13	12	11	10	9	8	7	6	5	4	3	2	1	0
Name		GPIO11				GPIO10				GPIO9				GPIO8		
Type		WO				WO				WO				WO		
Reset		0	0	0		0	0	0		0	0	0		0	0	0

Overview: For bitwise access of GPIO_MODE1

Bit(s)	Mnemonic	Name	Description
30:28		GPIO15	**Bitwise SET operation for Aux. mode of KCOL1** 0: Keep 1: SET bits
26:24		GPIO14	**Bitwise SET operation for Aux. mode of KCOL2** 0: Keep 1: SET bits
22:20		GPIO13	**Bitwise SET operation for Aux. mode of KCOL3** 0: Keep 1: SET bits
18:16		GPIO12	**Bitwise SET operation for Aux. mode of KCOL4** 0: Keep 1: SET bits
14:12		GPIO11	**Bitwise SET operation for Aux. mode of UTXD1** 0: Keep 1: SET bits
10:8		GPIO10	**Bitwise SET operation for Aux. mode of URXD1** 0: Keep 1: SET bits
6:4		GPIO9	**Bitwise SET operation for Aux. mode of GPIO_9** 0: Keep 1: SET bits
2:0		GPIO8	**Bitwise SET operation for Aux. mode of GPIO_8** 0: Keep

This document contains information that is proprietary to MediaTek Inc.
Unauthorized reproduction or disclosure of this information in whole or in part is strictly prohibited.
MEDIATEK CONFIDENTIAL FOR dengzhenli@ fari-sightedmobile.com USE ONLY

Bit(s)	Mnemonic	Name	Description
			1: SET bits

A0020C18 **GPIO_MODE1_CLR** **GPIO Mode Control** **00000000**

Bit	31	30	29	28	27	26	25	24	23	22	21	20	19	18	17	16
Name		**GPIO15**				**GPIO14**				**GPIO13**				**GPIO12**		
Type		WO				WO				WO				WO		
Reset		0	0	0		0	0	0		0	0	0		0	0	0
Bit	15	14	13	12	11	10	9	8	7	6	5	4	3	2	1	0
Name		**GPIO11**				**GPIO10**				**GPIO9**				**GPIO8**		
Type		WO				WO				WO				WO		
Reset		0	0	0		0	0	0		0	0	0		0	0	0

Overview: For bitwise access of GPIO_MODE1

Bit(s)	Mnemonic	Name	Description
30:28		GPIO15	**Bitwise CLR operation for Aux. mode of KCOL1** 0: Keep 1: CLR bits
26:24		GPIO14	**Bitwise CLR operation for Aux. mode of KCOL2** 0: Keep 1: CLR bits
22:20		GPIO13	**Bitwise CLR operation for Aux. mode of KCOL3** 0: Keep 1: CLR bits
18:16		GPIO12	**Bitwise CLR operation for Aux. mode of KCOL4** 0: Keep 1: CLR bits
14:12		GPIO11	**Bitwise CLR operation for Aux. mode of UTXD1** 0: Keep 1: CLR bits
10:8		GPIO10	**Bitwise CLR operation for Aux. mode of URXD1** 0: Keep 1: CLR bits
6:4		GPIO9	**Bitwise CLR operation for Aux. mode of GPIO_9** 0: Keep 1: CLR bits
2:0		GPIO8	**Bitwise CLR operation for Aux. mode of GPIO_8** 0: Keep 1: CLR bits

A0020C20 **GPIO_MODE2** **GPIO Mode Control** **11000000**

Bit	31	30	29	28	27	26	25	24	23	22	21	20	19	18	17	16
Name		**GPIO23**				**GPIO22**				**GPIO21**				**GPIO20**		
Type		RW				RW				RW				RW		
Reset		0	0	1		0	0	1		0	0	0		0	0	0
Bit	15	14	13	12	11	10	9	8	7	6	5	4	3	2	1	0
Name		**GPIO19**				**GPIO18**				**GPIO17**				**GPIO16**		
Type		RW				RW				RW				RW		

This document contains information that is proprietary to MediaTek Inc.
Unauthorized reproduction or disclosure of this information in whole or in part is strictly prohibited.
MEDIATEK CONFIDENTIAL FOR dengzhenli@ farsightedmobile.com USE ONLY

Reset		0	0	0		0	0	0		0	0	0		0	0	0

Overview: Configures GPIO aux. mode

Bit(s)	Mnemonic	Name	Description
30:28		GPIO23	**Aux. mode of GPIO_23** 0: GPIO23 (IO) 1: BPI_BUS1 (O) 2: Reserved 3: Reserved 4: Reserved 5: Reserved 6: Reserved 7: Reserved
26:24		GPIO22	**Aux. mode of GPIO_22** 0: GPIO22 (IO) 1: BPI_BUS2 (O) 2: Reserved 3: Reserved 4: Reserved 5: Reserved 6: Reserved 7: Reserved
22:20		GPIO21	**Aux. mode of GPIO_21** 0: GPIO21 (IO) 1: KROW0 (IO) 2: Reserved 3: Reserved 4: Reserved 5: MCINS (I) 6: BTDBGIN (I) 7: Reserved
18:16		GPIO20	**Aux. mode of GPIO_20** 0: GPIO20 (IO) 1: KROW1 (IO) 2: EINT14 (I) 3: EDIDO (O) 4: BTPRI (IO) 5: JTRCK (O) 6: BTDBGACKN (O) 7: Reserved
14:12		GPIO19	**Aux. mode of GPIO_19** 0: GPIO19 (IO) 1: KROW2 (IO) 2: PWM1 (O) 3: EDIWS (O) 4: FMJTDO (O) 5: JTDO (O) 6: BTJTDO (O) 7: Reserved
10:8		GPIO18	**Aux. mode of GPIO_18** 0: GPIO18 (IO) 1: KROW3 (IO) 2: EINT13 (I) 3: CLKO0 (O) 4: FMJTRSTB (I) 5: JTRST_B (I) 6: BTJTRSTB (I)

This document contains information that is proprietary to MediaTek Inc.
Unauthorized reproduction or disclosure of this information in whole or in part is strictly prohibited.
MEDIATEK CONFIDENTIAL FOR dengzhenli@ fangmingtedmobile.com USE ONLY

Bit(s)	Mnemonic	Name	Description
			7: Reserved
6:4		GPIO17	**Aux. mode of GPIO_17** 0: GPIO17 (IO) 1: KROW4 (IO) 2: U2TXD (O) 3: EDICK (O) 4: Reserved 5: Reserved 6: Reserved 7: Reserved
2:0		GPIO16	**Aux. mode of GPIO_16** 0: GPIO16 (IO) 1: KCOL0 (IO) 2: Reserved 3: Reserved 4: Reserved 5: Reserved 6: Reserved 7: Reserved

A0020C24 **GPIO_MODE2_SET** **GPIO Mode Control** **00000000**

Bit	31	30	29	28	27	26	25	24	23	22	21	20	19	18	17	16
Name		**GPIO23**				**GPIO22**				**GPIO21**				**GPIO20**		
Type		WO				WO				WO				WO		
Reset		0	0	0		0	0	0		0	0	0		0	0	0
Bit	15	14	13	12	11	10	9	8	7	6	5	4	3	2	1	0
Name		**GPIO19**				**GPIO18**				**GPIO17**				**GPIO16**		
Type		WO				WO				WO				WO		
Reset		0	0	0		0	0	0		0	0	0		0	0	0

Overview: For bitwise access of GPIO_MODE2

Bit(s)	Mnemonic	Name	Description
30:28		GPIO23	**Bitwise SET operation for Aux. mode of BPI_BUS1** 0: Keep 1: SET bits
26:24		GPIO22	**Bitwise SET operation for Aux. mode of BPI_BUS2** 0: Keep 1: SET bits
22:20		GPIO21	**Bitwise SET operation for Aux. mode of KROW0** 0: Keep 1: SET bits
18:16		GPIO20	**Bitwise SET operation for Aux. mode of KROW1** 0: Keep 1: SET bits
14:12		GPIO19	**Bitwise SET operation for Aux. mode of KROW2** 0: Keep 1: SET bits
10:8		GPIO18	**Bitwise SET operation for Aux. mode of KROW3** 0: Keep 1: SET bits

This document contains information that is proprietary to MediaTek Inc.
Unauthorized reproduction or disclosure of this information in whole or in part is strictly prohibited.
MEDIATEK CONFIDENTIAL FOR dengzhenli@ far-sightedmobile.com USE ONLY

Bit(s)	Mnemonic	Name	Description
6:4		GPIO17	**Bitwise SET operation for Aux. mode of KROW4** 0: Keep 1: SET bits
2:0		GPIO16	**Bitwise SET operation for Aux. mode of KCOL0** 0: Keep 1: SET bits

A0020C28 GPIO_MODE2_CLR GPIO Mode Control 00000000

Bit	31	30	29	28	27	26	25	24	23	22	21	20	19	18	17	16
Name		GPIO23				GPIO22				GPIO21				GPIO20		
Type		WO				WO				WO				WO		
Reset		0	0	0		0	0	0		0	0	0		0	0	0
Bit	15	14	13	12	11	10	9	8	7	6	5	4	3	2	1	0
Name		GPIO19				GPIO18				GPIO17				GPIO16		
Type		WO				WO				WO				WO		
Reset		0	0	0		0	0	0		0	0	0		0	0	0

Overview: For bitwise access of GPIO_MODE2

Bit(s)	Mnemonic	Name	Description
30:28		GPIO23	**Bitwise CLR operation for Aux. mode of BPI_BUS1** 0: Keep 1: CLR bits
26:24		GPIO22	**Bitwise CLR operation for Aux. mode of BPI_BUS2** 0: Keep 1: CLR bits
22:20		GPIO21	**Bitwise CLR operation for Aux. mode of KROW0** 0: Keep 1: CLR bits
18:16		GPIO20	**Bitwise CLR operation for Aux. mode of KROW1** 0: Keep 1: CLR bits
14:12		GPIO19	**Bitwise CLR operation for Aux. mode of KROW2** 0: Keep 1: CLR bits
10:8		GPIO18	**Bitwise CLR operation for Aux. mode of KROW3** 0: Keep 1: CLR bits
6:4		GPIO17	**Bitwise CLR operation for Aux. mode of KROW4** 0: Keep 1: CLR bits
2:0		GPIO16	**Bitwise CLR operation for Aux. mode of KCOL0** 0: Keep 1: CLR bits

A0020C30 GPIO_MODE3 GPIO Mode Control 00000001

Bit	31	30	29	28	27	26	25	24	23	22	21	20	19	18	17	16

This document contains information that is proprietary to MediaTek Inc.
Unauthorized reproduction or disclosure of this information in whole or in part is strictly prohibited.
MEDIATEK CONFIDENTIAL FOR denzheni@ fartightedmobile.com USE ONLY

Name		GPIO31				GPIO30			GPIO29				GPIO28			
Type		RW				RW			RW				RW			
Reset		0	0	0		0	0	0	0	0	0	0	0	0	0	0
Bit	15	14	13	12	11	10	9	8	7	6	5	4	3	2	1	0
Name	GPIO27					GPIO26				GPIO25				GPIO24		
Type	RW					RW				RW				RW		
Reset	0	0	0	0		0	0	0		0	0	0		0	0	1

Overview: Configures GPIO aux. mode

Bit(s)	Mnemonic	Name	Description
30:28		GPIO31	**Aux. mode of GPIO_31** 0: GPIO31 (IO) 1: MCCK (O) 2: Reserved 3: Reserved 4: U2RXD (I) 5: Reserved 6: Reserved 7: Reserved
26:24		GPIO30	**Aux. mode of GPIO_30** 0: GPIO30 (IO) 1: CMCSK (I) 2: LPTE (I) 3: CMCSD2 (I) 4: EINT16 (I) 5: Reserved 6: JTRCK (O) 7: Reserved
23:20		GPIO29	**Aux. mode of GPIO_29** 0: GPIO29 (IO) 1: CMMCLK (O) 2: LSA0DA1 (O) 3: DAISYNC (O) 4: SPIMISO (IO) 5: FMJTDO (O) 6: JTDO (O) 7: Reserved 8: MC2DA0 (IO)
19:16		GPIO28	**Aux. mode of GPIO_28** 0: GPIO28 (IO) 1: CMCSD1 (I) 2: LSDA1 (IO) 3: DAIPCMOUT (O) 4: SPIMOSI (IO) 5: FMJTRSTB (I) 6: JTRST_B (I) 7: Reserved 8: MC2CK (O)
15:12		GPIO27	**Aux. mode of GPIO_27** 0: GPIO27 (IO) 1: CMCSD0 (I) 2: LSCE_B1 (O) 3: DAIPCMIN (I) 4: SPISCK (IO) 5: FMJTCK (I) 6: JTCK (I) 7: Reserved 8: MC2CM0 (O)

This document contains information that is proprietary to MediaTek Inc.
Unauthorized reproduction or disclosure of this information in whole or in part is strictly prohibited.

Bit(s)	Mnemonic	Name	Description
10:8		GPIO26	**Aux. mode of GPIO_26** 0: GPIO26 (IO) 1: CMPDN (O) 2: LSCK1 (O) 3: DAICLK (O) 4: SPICS (IO) 5: FMJTMS (I) 6: JTMS (I) 7: Reserved)
6:4		GPIO25	**Aux. mode of GPIO_25** 0: GPIO25 (IO) 1: CMRST (O) 2: LSRSTB (O) 3: CLKO1 (O) 4: EINT15 (I) 5: FMJTDI (I) 6: JTDI (I) 7: Reserved
2:0		GPIO24	**Aux. mode of GPIO_24** 0: GPIO24 (IO) 1: BPI_BUS0 (O) 2: Reserved 3: Reserved 4: Reserved 5: Reserved 6: Reserved 7: Reserved

A0020C34 **GPIO_MODE3_SET** **GPIO Mode Control** **00000000**

Bit	31	30	29	28	27	26	25	24	23	22	21	20	19	18	17	16
Name		**GPIO31**				**GPIO30**			**GPIO29**				**GPIO28**			
Type		WO				WO			WO				WO			
Reset		0	0	0		0	0	0	0	0	0	0	0	0	0	0
Bit	15	14	13	12	11	10	9	8	7	6	5	4	3	2	1	0
Name	**GPIO27**					**GPIO26**				**GPIO25**				**GPIO24**		
Type	WO					WO				WO				WO		
Reset	0	0	0	0		0	0	0		0	0	0		0	0	0

Overview: For bitwise access of GPIO_MODE3

Bit(s)	Mnemonic	Name	Description
30:28		GPIO31	**Bitwise SET operation for Aux. mode of MCCK** 0: Keep 1: SET bits
26:24		GPIO30	**Bitwise SET operation for Aux. mode of CMCSK** 0: Keep 1: SET bits
23:20		GPIO29	**Bitwise SET operation for Aux. mode of CMMCLK** 0: Keep 1: SET bits
19:16		GPIO28	**Bitwise SET operation for Aux. mode of CMCSD1** 0: Keep

MEDIATEK CONFIDENTIAL FOR dengzhenli@far-sightedmobile.com USE ONLY

This document contains information that is proprietary to MediaTek Inc.
Unauthorized reproduction or disclosure of this information in whole or in part is strictly prohibited.

Bit(s)	Mnemonic	Name	Description
			1: SET bits
15:12		GPIO27	**Bitwise SET operation for Aux. mode of CMCSD0** 0: Keep 1: SET bits
10:8		GPIO26	**Bitwise SET operation for Aux. mode of CMPDN** 0: Keep 1: SET bits
6:4		GPIO25	**Bitwise SET operation for Aux. mode of CMRST** 0: Keep 1: SET bits
2:0		GPIO24	**Bitwise SET operation for Aux. mode of BPI_BUS0** 0: Keep 1: SET bits

A0020C38 **GPIO_MODE3_CLR** **GPIO Mode Control** **00000000**

Bit	31	30	29	28	27	26	25	24	23	22	21	20	19	18	17	16
Name		GPIO31				GPIO30			GPIO29				GPIO28			
Type		WO				WO			WO				WO			
Reset		0	0	0		0	0	0	0	0	0	0	0	0	0	0
Bit	15	14	13	12	11	10	9	8	7	6	5	4	3	2	1	0
Name	GPIO27					GPIO26				GPIO25				GPIO24		
Type	WO					WO				WO				WO		
Reset	0	0	0	0		0	0	0		0	0	0		0	0	0

Overview: For bitwise access of GPIO_MODE3

Bit(s)	Mnemonic	Name	Description
30:28		GPIO31	**Bitwise CLR operation for Aux. mode of MCCK** 0: Keep 1: CLR bits
26:24		GPIO30	**Bitwise CLR operation for Aux. mode of CMCSK** 0: Keep 1: CLR bits
23:20		GPIO29	**Bitwise CLR operation for Aux. mode of CMMCLK** 0: Keep 1: CLR bits
19:16		GPIO28	**Bitwise CLR operation for Aux. mode of CMCSD1** 0: Keep 1: CLR bits
15:12		GPIO27	**Bitwise CLR operation for Aux. mode of CMCSD0** 0: Keep 1: CLR bits
10:8		GPIO26	**Bitwise CLR operation for Aux. mode of CMPDN** 0: Keep 1: CLR bits
6:4		GPIO25	**Bitwise CLR operation for Aux. mode of CMRST** 0: Keep 1: CLR bits
2:0		GPIO24	**Bitwise CLR operation for Aux. mode of BPI_BUS0**

MEDIATEK CONFIDENTIAL FOR dengzhenli@ farsightedmobile.com USE ONLY

This document contains information that is proprietary to MediaTek Inc.
Unauthorized reproduction or disclosure of this information in whole or in part is strictly prohibited.

Bit(s)	Mnemonic	Name	Description
			0: Keep 1: CLR bits

A0020C40 GPIO_MODE4 GPIO Mode Control 11100000

Bit	31	30	29	28	27	26	25	24	23	22	21	20	19	18	17	16
Name		GPIO39				GPIO38				GPIO37				GPIO36		
Type		RW				RW				RW				RW		
Reset		0	0	1		0	0	1		0	0	1		0	0	0
Bit	15	14	13	12	11	10	9	8	7	6	5	4	3	2	1	0
Name		GPIO35				GPIO34				GPIO33				GPIO32		
Type		RW				RW				RW				RW		
Reset		0	0	0		0	0	0		0	0	0		0	0	0

Overview: Configures GPIO aux. mode

Bit(s)	Mnemonic	Name	Description
30:28		GPIO39	**Aux. mode of GPIO_39** 0: GPIO39 (IO) 1: SIM1_SCLK (IO) 2: Reserved 3: Reserved 4: Reserved 5: Reserved 6: Reserved 7: Reserved
26:24		GPIO38	**Aux. mode of GPIO_38** 0: GPIO38 (IO) 1: SIM1_SRST (IO) 2: Reserved 3: Reserved 4: Reserved 5: Reserved 6: Reserved 7: Reserved
22:20		GPIO37	**Aux. mode of GPIO_37** 0: GPIO37 (IO) 1: SIM1_SIO (IO) 2: Reserved 3: Reserved 4: Reserved 5: Reserved 6: Reserved 7: Reserved
18:16		GPIO36	**Aux. mode of GPIO_36** 0: GPIO36 (IO) 1: MCDA3 (IO) 2: EINT19 (I) 3: CLKO2 (O) 4: DAIPCMOUT (O) 5: Reserved 6: Reserved 7: Reserved
14:12		GPIO35	**Aux. mode of GPIO_35** 0: GPIO35 (IO) 1: MCDA2 (IO)

This document contains information that is proprietary to MediaTek Inc.
Unauthorized reproduction or disclosure of this information in whole or in part is strictly prohibited.
MEDIATEK CONFIDENTIAL FOR dengzhenli@ farsightedmobile.com USE ONLY

Bit(s)	Mnemonic	Name	Description
			2: EINT18 (I) 3: Reserved 4: DAICLK (O) 5: Reserved 6: Reserved 7: Reserved
10:8		GPIO34	**Aux. mode of GPIO_34** 0: GPIO34 (IO) 1: MCDA1 (IO) 2: EINT17 (I) 3: Reserved 4: DAIPCMIN (I) 5: Reserved 6: Reserved 7: Reserved
6:4		GPIO33	**Aux. mode of GPIO_33** 0: GPIO33 (IO) 1: MCDA0 (IO) 2: Reserved 3: Reserved 4: DAISYNC (O) 5: Reserved 6: Reserved 7: Reserved
2:0		GPIO32	**Aux. mode of GPIO_32** 0: GPIO32 (IO) 1: MCCM0 (O) 2: Reserved 3: Reserved 4: U2TXD (O) 5: Reserved 6: Reserved 7: Reserved

A0020C44 **GPIO_MODE4_SET** **GPIO Mode Control** **00000000**

Bit	31	30	29	28	27	26	25	24	23	22	21	20	19	18	17	16
Name		GPIO39				GPIO38				GPIO37				GPIO36		
Type		WO				WO				WO				WO		
Reset		0	0	0		0	0	0		0	0	0		0	0	0
Bit	**15**	**14**	**13**	**12**	**11**	**10**	**9**	**8**	**7**	**6**	**5**	**4**	**3**	**2**	**1**	**0**
Name		GPIO35				GPIO34				GPIO33				GPIO32		
Type		WO				WO				WO				WO		
Reset		0	0	0		0	0	0		0	0	0		0	0	0

Overview: For bitwise access of GPIO_MODE4

Bit(s)	Mnemonic	Name	Description
30:28		GPIO39	**Bitwise SET operation for Aux. mode of SIM1_SCLK** 0: Keep 1: SET bits
26:24		GPIO38	**Bitwise SET operation for Aux. mode of SIM1_SRST** 0: Keep 1: SET bits

MEDIATEK CONFIDENTIAL FOR dengzhenli@far-sightedmobile.com USE ONLY

This document contains information that is proprietary to MediaTek Inc.
Unauthorized reproduction or disclosure of this information in whole or in part is strictly prohibited.

Bit(s)	Mnemonic	Name	Description
22:20		GPIO37	**Bitwise SET operation for Aux. mode of SIM1_SIO** 0: Keep 1: SET bits
18:16		GPIO36	**Bitwise SET operation for Aux. mode of MCDA3** 0: Keep 1: SET bits
14:12		GPIO35	**Bitwise SET operation for Aux. mode of MCDA2** 0: Keep 1: SET bits
10:8		GPIO34	**Bitwise SET operation for Aux. mode of MCDA1** 0: Keep 1: SET bits
6:4		GPIO33	**Bitwise SET operation for Aux. mode of MCDA0** 0: Keep 1: SET bits
2:0		GPIO32	**Bitwise SET operation for Aux. mode of MCCM0** 0: Keep 1: SET bits

A0020C48 **GPIO_MODE4_CLR** **GPIO Mode Control** **00000000**

Bit	31	30	29	28	27	26	25	24	23	22	21	20	19	18	17	16
Name		**GPIO39**				**GPIO38**				**GPIO37**				**GPIO36**		
Type		WO				WO				WO				WO		
Reset		0	0	0		0	0	0		0	0	0		0	0	0
Bit	15	14	13	12	11	10	9	8	7	6	5	4	3	2	1	0
Name		**GPIO35**				**GPIO34**				**GPIO33**				**GPIO32**		
Type		WO				WO				WO				WO		
Reset		0	0	0		0	0	0		0	0	0		0	0	0

Overview: For bitwise access of GPIO_MODE4

Bit(s)	Mnemonic	Name	Description
30:28		GPIO39	**Bitwise CLR operation for Aux. mode of SIM1_SCLK** 0: Keep 1: CLR bits
26:24		GPIO38	**Bitwise CLR operation for Aux. mode of SIM1_SRST** 0: Keep 1: CLR bits
22:20		GPIO37	**Bitwise CLR operation for Aux. mode of SIM1_SIO** 0: Keep 1: CLR bits
18:16		GPIO36	**Bitwise CLR operation for Aux. mode of MCDA3** 0: Keep 1: CLR bits
14:12		GPIO35	**Bitwise CLR operation for Aux. mode of MCDA2** 0: Keep 1: CLR bits
10:8		GPIO34	**Bitwise CLR operation for Aux. mode of MCDA1** 0: Keep

MEDIATEK CONFIDENTIAL FOR dengzheni@ far-sightedmobile.com USE ONLY

This document contains information that is proprietary to MediaTek Inc.
Unauthorized reproduction or disclosure of this information in whole or in part is strictly prohibited.

Bit(s)	Mnemonic	Name	Description
			1: CLR bits
6:4		GPIO33	**Bitwise CLR operation for Aux. mode of MCDA0** 0: Keep 1: CLR bits
2:0		GPIO32	**Bitwise CLR operation for Aux. mode of MCCM0** 0: Keep 1: CLR bits

A0020C50 GPIO_MODE5 GPIO Mode Control 01000111

Bit	31	30	29	28	27	26	25	24	23	22	21	20	19	18	17	16
Name		GPIO47				GPIO46				GPIO45				GPIO44		
Type		RW				RW				RW				RW		
Reset		0	0	0		0	0	1		0	0	0		0	0	0
Bit	15	14	13	12	11	10	9	8	7	6	5	4	3	2	1	0
Name		GPIO43				GPIO42				GPIO41				GPIO40		
Type		RW				RW				RW				RW		
Reset		0	0	0		0	0	1		0	0	1		0	0	1

Overview: Configures GPIO aux. mode

Bit(s)	Mnemonic	Name	Description
30:28		GPIO47	**Aux. mode of GPIO_47** 0: GPIO47 (IO) 1: LSCK0 (O) 2: Reserved 3: CMPDN (O) 4: Reserved 5: Reserved 6: Reserved 7: Reserved
26:24		GPIO46	**Aux. mode of GPIO_46** 0: GPIO46 (IO) 1: LSCE_B0 (O) 2: EINT20 (I) 3: CMCSD0 (I) 4: CLKO4 (O) 5: Reserved 6: Reserved 7: Reserved
22:20		GPIO45	**Aux. mode of GPIO_45** 0: GPIO45 (IO) 1: LSRSTB (O) 2: Reserved 3: CMRST (O) 4: Reserved 5: Reserved 6: Reserved 7: Reserved
18:16		GPIO44	**Aux. mode of GPIO_44** 0: GPIO44 (IO) 1: SDA (IO) 2: Reserved 3: Reserved 4: Reserved

This document contains information that is proprietary to MediaTek Inc.
Unauthorized reproduction or disclosure of this information in whole or in part is strictly prohibited.
MEDIATEK CONFIDENTIAL FOR dengzhenli@ fara-sightedmobile.com USE ONLY

Bit(s)	Mnemonic	Name	Description
			5: Reserved 6: Reserved 7: Reserved
14:12		GPIO43	**Aux. mode of GPIO_43** 0: GPIO43 (IO) 1: SCL (IO) 2: Reserved 3: Reserved 4: Reserved 5: Reserved 6: Reserved 7: Reserved
10:8		GPIO42	**Aux. mode of GPIO_42** 0: GPIO42 (IO) 1: SIM2_SCLK (IO) 2: LSCE1_B1 (O) 3: Reserved 4: Reserved 5: Reserved 6: Reserved 7: Reserved
6:4		GPIO41	**Aux. mode of GPIO_41** 0: GPIO41 (IO) 1: SIM2_SRST (IO) 2: CLKO3 (O) 3: U2CTS (I) 4: Reserved 5: Reserved 6: Reserved 7: Reserved
2:0		GPIO40	**Aux. mode of GPIO_40** 0: GPIO40 (IO) 1: SIM2_SIO (IO) 2: Reserved 3: U2RTS (O) 4: Reserved 5: Reserved 6: Reserved 7: Reserved

A0020C54 **GPIO_MODE5_SET** **GPIO Mode Control** **00000000**

Bit	31	30	29	28	27	26	25	24	23	22	21	20	19	18	17	16
Name		**GPIO47**				**GPIO46**				**GPIO45**				**GPIO44**		
Type		WO				WO				WO				WO		
Reset		0	0	0		0	0	0		0	0	0		0	0	0
Bit	15	14	13	12	11	10	9	8	7	6	5	4	3	2	1	0
Name		**GPIO43**				**GPIO42**				**GPIO41**				**GPIO40**		
Type		WO				WO				WO				WO		
Reset		0	0	0		0	0	0		0	0	0		0	0	0

Overview: For bitwise access of GPIO_MODE5

Bit(s)	Mnemonic	Name	Description

MEDIATEK CONFIDENTIAL FOR dengzhen@far-sightedmobile.com USE ONLY

This document contains information that is proprietary to MediaTek Inc.
Unauthorized reproduction or disclosure of this information in whole or in part is strictly prohibited.

Bit(s)	Mnemonic	Name	Description
30:28		GPIO47	**Bitwise SET operation for Aux. mode of LSCK** 0: Keep 1: SET bits
26:24		GPIO46	**Bitwise SET operation for Aux. mode of LSCE_B** 0: Keep 1: SET bits
22:20		GPIO45	**Bitwise SET operation for Aux. mode of LSRSTB** 0: Keep 1: SET bits
18:16		GPIO44	**Bitwise SET operation for Aux. mode of SDA28** 0: Keep 1: SET bits
14:12		GPIO43	**Bitwise SET operation for Aux. mode of SCL28** 0: Keep 1: SET bits
10:8		GPIO42	**Bitwise SET operation for Aux. mode of SIM2_SCLK** 0: Keep 1: SET bits
6:4		GPIO41	**Bitwise SET operation for Aux. mode of SIM2_SRST** 0: Keep 1: SET bits
2:0		GPIO40	**Bitwise SET operation for Aux. mode of SIM2_SIO** 0: Keep 1: SET bits

A0020C58 **GPIO_MODE5_CLR** **GPIO Mode Control** **00000000**

Bit	31	30	29	28	27	26	25	24	23	22	21	20	19	18	17	16
Name		**GPIO47**				**GPIO46**				**GPIO45**				**GPIO44**		
Type		WO				WO				WO				WO		
Reset		0	0	0		0	0	0		0	0	0		0	0	0
Bit	15	14	13	12	11	10	9	8	7	6	5	4	3	2	1	0
Name		**GPIO43**				**GPIO42**				**GPIO41**				**GPIO40**		
Type		WO				WO				WO				WO		
Reset		0	0	0		0	0	0		0	0	0		0	0	0

Overview: For bitwise access of GPIO_MODE5

Bit(s)	Mnemonic	Name	Description
30:28		GPIO47	**Bitwise CLR operation for Aux. mode of LSCK** 0: Keep 1: CLR bits
26:24		GPIO46	**Bitwise CLR operation for Aux. mode of LSCE_B** 0: Keep 1: CLR bits
22:20		GPIO45	**Bitwise CLR operation for Aux. mode of LSRSTB** 0: Keep 1: CLR bits
18:16		GPIO44	**Bitwise CLR operation for Aux. mode of SDA28** 0: Keep

This document contains information that is proprietary to MediaTek Inc.
Unauthorized reproduction or disclosure of this information in whole or in part is strictly prohibited.

Bit(s)	Mnemonic	Name	Description
			1: CLR bits
14:12		GPIO43	**Bitwise CLR operation for Aux. mode of SCL28** 0: Keep 1: CLR bits
10:8		GPIO42	**Bitwise CLR operation for Aux. mode of SIM2_SCLK** 0: Keep 1: CLR bits
6:4		GPIO41	**Bitwise CLR operation for Aux. mode of SIM2_SRST** 0: Keep 1: CLR bits
2:0		GPIO40	**Bitwise CLR operation for Aux. mode of SIM2_SIO** 0: Keep 1: CLR bits

A0020C60 GPIO_MODE6 GPIO Mode Control 00001000

Bit	31	30	29	28	27	26	25	24	23	22	21	20	19	18	17	16
Name		GPIO55				GPIO54				GPIO53				GPIO52		
Type		RW				RW				RW				RW		
Reset		0	0	0		0	0	0		0	0	0		0	0	0
Bit	**15**	**14**	**13**	**12**	**11**	**10**	**9**	**8**	**7**	**6**	**5**	**4**	**3**	**2**	**1**	**0**
Name		GPIO51			GPIO50					GPIO49				GPIO48		
Type		RW			RW					RW				RW		
Reset		0	0	1	0	0	0	0		0	0	0		0	0	0

Overview: Configures GPIO aux. mode

Bit(s)	Mnemonic	Name	Description
30:28		GPIO55	**Aux. mode of GPIO_55** 0: AGPIO55 (AGIO) 1: Reserved 2: Reserved 3: Reserved 4: Reserved 5: Reserved 6: Reserved 7: Reserved
26:24		GPIO54	**Aux. mode of GPIO_54** 0: AGPIO54 (AGIO) 1: Reserved 2: Reserved 3: Reserved 4: Reserved 5: Reserved 6: Reserved 7: Reserved
22:20		GPIO53	**Aux. mode of GPIO_53** 0: AGPIO53 (AGI) 1: SRCLKENAI (I) 2: EINT24 (I) 3: Reserved 4: Reserved 5: Reserved 6: Reserved

This document contains information that is proprietary to MediaTek Inc.
Unauthorized reproduction or disclosure of this information in whole or in part is strictly prohibited.
MEDIATEK CONFIDENTIAL FOR dengzhenli@ farsightedmobile.com USE ONLY

Bit(s)	Mnemonic	Name	Description
			7: Reserved
18:16		GPIO52	**Aux. mode of GPIO_52** 0: AGPI52 (AGI) 1: Reserved 2: EINT23 (I) 3: Reserved 4: Reserved 5: Reserved 6: Reserved 7: Reserved
14:12		GPIO51	**Aux. mode of GPIO_51** 0: GPIO51 (IO) 1: RESETB (IO) 2: Reserved 3: Reserved 4: Reserved 5: Reserved 6: Reserved 7: Reserved
11:8		GPIO50	**Aux. mode of GPIO_50** 0: GPIO50 (IO) 1: LPTE (I) 2: EINT22 (I) 3: CMCSK (I) 4: CMCSD2 (I) 5: Reserved 6: MCINS (I) 7: Reserved 8: Reserved 9: CLKO5 (O)
6:4		GPIO49	**Aux. mode of GPIO_49** 0: GPIO49 (IO) 1: LSA0DA0 (O) 2: LSCE1_B0 (O) 3: CMMCLK (O) 4: Reserved 5: Reserved 6: Reserved 7: Reserved
2:0		GPIO48	**Aux. mode of GPIO_48** 0: GPIO48 (IO) 1: LSDA0 (IO) 2: EINT21 (I) 3: CMCSD1 (I) 4: WIFITOBT (I) 5: Reserved 6: Reserved 7: Reserved

A0020C64 **GPIO_MODE6_SET** **GPIO Mode Control** **00000000**

Bit	31	30	29	28	27	26	25	24	23	22	21	20	19	18	17	16
Name		GPIO55				GPIO54				GPIO53				GPIO52		
Type		WO				WO				WO				WO		
Reset		0	0	0		0	0	0		0	0	0		0	0	0
Bit	15	14	13	12	11	10	9	8	7	6	5	4	3	2	1	0

This document contains information that is proprietary to MediaTek Inc.
Unauthorized reproduction or disclosure of this information in whole or in part is strictly prohibited.
MEDIATEK CONFIDENTIAL FOR dengli@far-sightedmobile.com USE ONLY

Bit	15	14	13	12	11	10	9	8	7	6	5	4	3	2	1	0
Name		**GPIO51**			**GPIO50**					**GPIO49**				**GPIO48**		
Type		WO			WO					WO				WO		
Reset		0	0	0	0	0	0	0		0	0	0		0	0	0

Overview: For bitwise access of GPIO_MODE6

Bit(s)	Mnemonic	Name	Description
30:28		GPIO55	**Bitwise SET operation for Aux. mode of SRCLKENAI** 0: Keep 1: SET bits
26:24		GPIO54	**Bitwise SET operation for Aux. mode of EINT** 0: Keep 1: SET bits
22:20		GPIO53	**Bitwise SET operation for Aux. mode of TP4** 0: Keep 1: SET bits
18:16		GPIO52	**Bitwise SET operation for Aux. mode of TP3** 0: Keep 1: SET bits
14:12		GPIO51	**Bitwise SET operation for Aux. mode of RESETB** 0: Keep 1: SET bits
11:8		GPIO50	**Bitwise SET operation for Aux. mode of LPTE** 0: Keep 1: SET bits
6:4		GPIO49	**Bitwise SET operation for Aux. mode of LSA0** 0: Keep 1: SET bits
2:0		GPIO48	**Bitwise SET operation for Aux. mode of LSDA** 0: Keep 1: SET bits

A0020C68 **GPIO_MODE6 CLR** **GPIO Mode Control** **00000000**

Bit	31	30	29	28	27	26	25	24	23	22	21	20	19	18	17	16
Name		**GPIO55**				**GPIO54**				**GPIO53**				**GPIO52**		
Type		WO				WO				WO				WO		
Reset		0	0	0		0	0	0		0	0	0		0	0	0
Bit	15	14	13	12	11	10	9	8	7	6	5	4	3	2	1	0
Name		**GPIO51**			**GPIO50**					**GPIO49**				**GPIO48**		
Type		WO			WO					WO				WO		
Reset		0	0	0	0	0	0	0		0	0	0		0	0	0

Overview: For bitwise access of GPIO_MODE6

Bit(s)	Mnemonic	Name	Description
30:28		GPIO55	**Bitwise CLR operation for Aux. mode of SRCLKENAI** 0: Keep 1: CLR bits
26:24		GPIO54	**Bitwise CLR operation for Aux. mode of EINT** 0: Keep

MEDIATEK CONFIDENTIAL FOR dengzhenli@far-sightedmobile.com USE ONLY

This document contains information that is proprietary to MediaTek Inc.
Unauthorized reproduction or disclosure of this information in whole or in part is strictly prohibited.

Bit(s)	Mnemonic	Name	Description
			1: CLR bits
22:20		GPIO53	**Bitwise CLR operation for Aux. mode of TP4** 0: Keep 1: CLR bits
18:16		GPIO52	**Bitwise CLR operation for Aux. mode of TP3** 0: Keep 1: CLR bits
14:12		GPIO51	**Bitwise CLR operation for Aux. mode of RECLRB** 0: Keep 1: CLR bits
11:8		GPIO50	**Bitwise CLR operation for Aux. mode of LPTE** 0: Keep 1: CLR bits
6:4		GPIO49	**Bitwise CLR operation for Aux. mode of LSA0** 0: Keep 1: CLR bits
2:0		GPIO48	**Bitwise CLR operation for Aux. mode of LSDA** 0: Keep 1: CLR bits

A0020D10 **GPIO_TDSEL** **GPIO TDSEL Control** **00000000**

Bit	31	30	29	28	27	26	25	24	23	22	21	20	19	18	17	16
Name															GPIO50	
Type															RW	
Reset															0	0
Bit	15	14	13	12	11	10	9	8	7	6	5	4	3	2	1	0
Name	GPIO46		GPIO42		GPIO41		GPIO36		GPIO25		GPIO18		GPIO9		GPIO8	
Type	RW		RW		RW		RW		RW		RW		RW		RW	
Reset	0	0	0	0	0	0	0	0	0	0	0	0	0	0	0	0

Overview: GPIO TX duty control register

Bit(s)	Mnemonic	Name	Description
17:16	**GPIO50**	GPIO50_TDSEL	GPIO50 Tx duty control
15:14	**GPIO46**	GPIO46_TDSEL	GPIO46 Tx duty control
13:12	**GPIO42**	GPIO42_TDSEL	GPIO42 Tx duty control
11:10	**GPIO41**	GPIO41_TDSEL	GPIO41 Tx duty control
9:8	**GPIO36**	GPIO36_TDSEL	GPIO36 Tx duty control
7:6	**GPIO25**	GPIO25_TDSEL	GPIO25 Tx duty control
5:4	**GPIO18**	GPIO18_TDSEL	GPIO18 Tx duty control
3:2	**GPIO9**	GPIO9_TDSEL	GPIO9 Tx duty control
1:0	**GPIO8**	GPIO8_TDSEL	GPIO8 Tx duty control

A0020D14 **GPIO_TDSEL_SET** **GPIO TDSEL Control** **00000000**

Bit	31	30	29	28	27	26	25	24	23	22	21	20	19	18	17	16
Name															GPIO50	

This document contains information that is proprietary to MediaTek Inc.
Unauthorized reproduction or disclosure of this information in whole or in part is strictly prohibited.

Type															WO	
Reset															0	0
Bit	15	14	13	12	11	10	9	8	7	6	5	4	3	2	1	0
Name	GPIO46		GPIO42		GPIO41		GPIO36		GPIO25		GPIO18		GPIO9		GPIO8	
Type	WO		WO		WO		WO		WO		WO		WO		WO	
Reset	0	0	0	0	0	0	0	0	0	0	0	0	0	0	0	0

Overview: For bitwise access of GPIO_TDSEL

Bit(s)	Mnemonic	Name	Description
17:16	**GPIO50**	GPIO50_TDSEL	**Bitwise SET operation of GPIO50_TDSEL Tx duty control** 0: Keep 1: SET bits
15:14	**GPIO46**	GPIO46_TDSEL	**Bitwise SET operation of GPIO46_TDSEL Tx duty control** 0: Keep 1: SET bits
13:12	**GPIO42**	GPIO42_TDSEL	**Bitwise SET operation of GPIO42_TDSEL Tx duty control** 0: Keep 1: SET bits
11:10	**GPIO41**	GPIO41_TDSEL	**Bitwise SET operation of GPIO41_TDSEL Tx duty control** 0: Keep 1: SET bits
9:8	**GPIO36**	GPIO36_TDSEL	**Bitwise SET operation of GPIO36_TDSEL Tx duty control** 0: Keep 1: SET bits
7:6	**GPIO25**	GPIO25_TDSEL	**Bitwise SET operation of GPIO25_TDSEL Tx duty control** 0: Keep 1: SET bits
5:4	**GPIO18**	GPIO18_TDSEL	**Bitwise SET operation of GPIO18_TDSEL Tx duty control** 0: Keep 1: SET bits
3:2	**GPIO9**	GPIO9_TDSEL	**Bitwise SET operation of GPIO9_TDSEL Tx duty control** 0: Keep 1: SET bits
1:0	**GPIO8**	GPIO8_TDSEL	**Bitwise SET operation of GPIO8_TDSEL Tx duty control** 0: Keep 1: SET bits

A0020D18 **GPIO_TDSEL_CLR** **GPIO TDSEL Control** **00000000**

Bit	31	30	29	28	27	26	25	24	23	22	21	20	19	18	17	16
Name															GPIO50	
Type															WO	
Reset															0	0
Bit	15	14	13	12	11	10	9	8	7	6	5	4	3	2	1	0
Name	GPIO46		GPIO42		GPIO41		GPIO36		GPIO25		GPIO18		GPIO9		GPIO8	
Type	WO		WO		WO		WO		WO		WO		WO		WO	
Reset	0	0	0	0	0	0	0	0	0	0	0	0	0	0	0	0

Overview: For bitwise access of GPIO_TDSEL

Bit(s)	Mnemonic	Name	Description

This document contains information that is proprietary to MediaTek Inc.
Unauthorized reproduction or disclosure of this information in whole or in part is strictly prohibited.

Bit(s)	Mnemonic	Name	Description
17:16	**GPIO50**	GPIO50_TDSEL	**Bitwise CLR operation of GPIO50_TDSEL Tx duty control** 0: Keep 1: CLR bits
15:14	**GPIO46**	GPIO46_TDSEL	**Bitwise CLR operation of GPIO46_TDSEL Tx duty control** 0: Keep 1: CLR bits
13:12	**GPIO42**	GPIO42_TDSEL	**Bitwise CLR operation of GPIO42_TDSEL Tx duty control** 0: Keep 1: CLR bits
11:10	**GPIO41**	GPIO41_TDSEL	**Bitwise CLR operation of GPIO41_TDSEL Tx duty control** 0: Keep 1: CLR bits
9:8	**GPIO36**	GPIO36_TDSEL	**Bitwise CLR operation of GPIO36_TDSEL Tx duty control** 0: Keep 1: CLR bits
7:6	**GPIO25**	GPIO25_TDSEL	**Bitwise CLR operation of GPIO25_TDSEL Tx duty control** 0: Keep 1: CLR bits
5:4	**GPIO18**	GPIO18_TDSEL	**Bitwise CLR operation of GPIO18_TDSEL Tx duty control** 0: Keep 1: CLR bits
3:2	**GPIO9**	GPIO9_TDSEL	**Bitwise CLR operation of GPIO9_TDSEL Tx duty control** 0: Keep 1: CLR bits
1:0	**GPIO8**	GPIO8_TDSEL	**Bitwise CLR operation of GPIO8_TDSEL Tx duty control** 0: Keep 1: CLR bits

A0020E00 CLK_OUT0 CLK Out Selection Control 00000004

Bit	31	30	29	28	27	26	25	24	23	22	21	20	19	18	17	16
Name																
Type																
Reset																
Bit	15	14	13	12	11	10	9	8	7	6	5	4	3	2	1	0
Name													**CLK_OUT0**			
Type													RW			
Reset													0	1	0	0

Overview: CLK OUT0 Setting

Bit(s)	Mnemonic	Name	Description
3:0	**CLK_OUT0**	CFG0	**Selects clock output for CLKO_0** [1]: 26Mhz clock [4]: 32Khz_clock others: debug clock

A0020E10 CLK_OUT1 CLK Out Selection Control 00000004

Bit	31	30	29	28	27	26	25	24	23	22	21	20	19	18	17	16

This document contains information that is proprietary to MediaTek Inc.
Unauthorized reproduction or disclosure of this information in whole or in part is strictly prohibited.
MEDIATEK CONFIDENTIAL FOR dengzhenli@fortuneship.com USE ONLY

Name																
Type																
Reset																
Bit	15	14	13	12	11	10	9	8	7	6	5	4	3	2	1	0
Name													**CLK_OUT1**			
Type													RW			
Reset													0	1	0	0

Overview: CLK OUT1 setting

Bit(s)	Mnemonic	Name	Description
3:0	**CLK_OUT1**	CFG1	**Selects clock output for CLKO_1** [1]: 26Mhz clock [4]: 32Khz_clock others: debug clock

A0020E20 **CLK_OUT2** **CLK Out Selection Control** **00000004**

Bit	31	30	29	28	27	26	25	24	23	22	21	20	19	18	17	16
Name																
Type																
Reset																
Bit	15	14	13	12	11	10	9	8	7	6	5	4	3	2	1	0
Name													**CLK_OUT2**			
Type													RW			
Reset													0	1	0	0

Overview: CLK OUT2 setting

Bit(s)	Mnemonic	Name	Description
3:0	**CLK_OUT2**	CFG2	**Selects clock output for CLKO_2** [1]: 26Mhz clock [4]: 32Khz_clock others: debug clock

A0020E30 **CLK_OUT3** **CLK Out Selection Control** **00000004**

Bit	31	30	29	28	27	26	25	24	23	22	21	20	19	18	17	16
Name																
Type																
Reset																
Bit	15	14	13	12	11	10	9	8	7	6	5	4	3	2	1	0
Name													**CLK_OUT3**			
Type													RW			
Reset													0	1	0	0

Overview: CLK OUT3 setting

Bit(s)	Mnemonic	Name	Description
3:0	**CLK_OUT3**	CFG3	**Selects clock output for CLKO_3** [1]: 26Mhz clock [4]: 32Khz_clock

This document contains information that is proprietary to MediaTek Inc.
Unauthorized reproduction or disclosure of this information in whole or in part is strictly prohibited.

Bit(s)	Mnemonic	Name	Description
			others: debug clock

A0020E40 **CLK_OUT4** **CLK Out Selection Control** **00000004**

Bit	31	30	29	28	27	26	25	24	23	22	21	20	19	18	17	16
Name																
Type																
Reset																
Bit	15	14	13	12	11	10	9	8	7	6	5	4	3	2	1	0
Name													CLK_OUT4			
Type													RW			
Reset													0	1	0	0

Overview: CLK OUT4 setting

Bit(s)	Mnemonic	Name	Description
3:0	**CLK_OUT4**	CFG4	**Selects clock output for CLKO_4** [1]: 26Mhz clock [4]: 32Khz_clock others: debug clock

A0020E50 **CLK_OUT5** **CLK Out Selection Control** **00000004**

Bit	31	30	29	28	27	26	25	24	23	22	21	20	19	18	17	16
Name																
Type																
Reset																
Bit	15	14	13	12	11	10	9	8	7	6	5	4	3	2	1	0
Name													CLK_OUT5			
Type													RW			
Reset													0	1	0	0

Overview: CLK OUT5 setting

Bit(s)	Mnemonic	Name	Description
3:0	**CLK_OUT5**	CFG5	**Selects clock output for CLKO_5** [1]: 26Mhz clock [4]: 32Khz_clock others: debug clock

3.5 General-purpose Timer

3.5.1 General Descriptions

Three general-purpose timers are provided. Two timers are 16 bits long and one timer is 32 bits long. Each runs independently. GPT1 ~ 2 use 32k clock source to count, whereas GPT4 uses 26M clock source. The 26M clock source can be gated when the system enters the sleep mode, and this will

This document contains information that is proprietary to MediaTek Inc.
Unauthorized reproduction or disclosure of this information in whole or in part is strictly prohibited.
MEDIATEK CONFIDENTIAL FOR dengzhenli@far-sightedmobile.com USE ONLY

cause GPT4 to stop counting, whereas 32k clock source is always toggling. GPT1 and GPT2 can operate in one of the two modes: one-shot mode and auto-repeat mode. GPT4 are free running timer. In the one-shot mode, when the timer counts down and reaches 0, it will be halted. In the auto-repeat mode, when the timer reaches 0, it will simply be reset to counting down the initial value and repeating the count-down to 0. This loop keeps repeating until the disabling signal is set to 1. Regardless of the timer's mode, if the countdown initial value (i.e. GPTIMER1_DAT for GPT1 or GPTIMER_DAT2 for GPT2) is written when the timer is running, the new initial value will not take effect until the next time the timer is restarted. In the auto-repeat mode, the new countdown start value is used on the next countdown iteration. Therefore, before enabling the timer, the desired values for GPTIMER_DAT and the GPTIMER_PRESCALER registers must first be set.

Note that GPTimer's design is inherited form MT6261A, GPT3 is removed for achieving lower cost. For other timers, register addresses are the same with those of MT6261A.

3.5.2 Register Definition

Module name: GPTimer base address: (+A00C0000h)

Address	Name	Width	Register function
A00C0000	GPTIMER1_CON	32	GPT1 control register
A00C0004	GPTIMER1_DAT	32	GPT1 time-out interval register
A00C0008	GPTIMER2_CON	32	GPT2 control register
A00C000C	GPTIMER2_DAT	32	GPT2 time-out Interval register
A00C0010	GPTIMER_STA	32	GPT status register
A00C0014	GPTIMER1_PRESCALER	32	GPT1 prescaler register
A00C0018	GPTIMER2_PRESCALER	32	GPT2 prescaler register
A00C0028	GPTIMER4_CON	32	GPT4 control register
A00C002C	GPTIMER4_DAT	32	GPT4 data register

A00C0000 GPTIMER1_CON GPT1 Control Register 00000000

Bit	31	30	29	28	27	26	25	24	23	22	21	20	19	18	17	16
Name																
Type																
Reset																
Bit	15	14	13	12	11	10	9	8	7	6	5	4	3	2	1	0
Name	EN	MODE														
Type	RW	RW														
Reset	0	0														

Bit(s)	Mnemonic	Name	Description
15	EN	EN	**Controls GPT1 to start counting or to stop** 0: Disable GPT1 1: Enable GPT1
14	MODE	MODE	**Controls GPT1 to count repeatedly (in a loop) or just one-shot** 0: One-shot mode is selected.

This document contains information that is proprietary to MediaTek Inc.
Unauthorized reproduction or disclosure of this information in whole or in part is strictly prohibited.
MEDIATEK CONFIDENTIAL FOR dengzhenli@far-sightedmobile.com USE ONLY

Bit(s)	Mnemonic	Name	Description
			1: Auto-repeat mode is selected.

A00C0004 GPTIMER1_DAT GPT1 Time-out Interval Register 0000FFFF

Bit	31	30	29	28	27	26	25	24	23	22	21	20	19	18	17	16
Name																
Type																
Reset																
Bit	15	14	13	12	11	10	9	8	7	6	5	4	3	2	1	0
Name	CNT															
Type	RW															
Reset	1	1	1	1	1	1	1	1	1	1	1	1	1	1	1	1

Bit(s)	Mnemonic	Name	Description
15:0	**CNT**	CNT	**Initial counting value** GPT1 counts down from GPTIMER1_DAT. When GPT1 counts down to 0, a GPT1 interrupt will be generated.

A00C0008 GPTIMER2_CON GPT2 Control Register 00000000

Bit	31	30	29	28	27	26	25	24	23	22	21	20	19	18	17	16
Name																
Type																
Reset																
Bit	15	14	13	12	11	10	9	8	7	6	5	4	3	2	1	0
Name	EN	MODE														
Type	RW	RW														
Reset	0	0														

Bit(s)	Mnemonic	Name	Description
15	**EN**	EN	**Controls GPT2 to start counting or to stop** 0: Disable GPT2 1: Enable GPT2
14	**MODE**	MODE	**Controls GPT2 to count repeatedly (in a loop) or just one-shot** 0: One-shot mode is selected. 1: Auto-repeat mode is selected.

A00C000C GPTIMER2_DAT GPT2 Time-out Interval Register 0000FFFF

Bit	31	30	29	28	27	26	25	24	23	22	21	20	19	18	17	16
Name																
Type																
Reset																
Bit	15	14	13	12	11	10	9	8	7	6	5	4	3	2	1	0
Name	CNT															
Type	RW															
Reset	1	1	1	1	1	1	1	1	1	1	1	1	1	1	1	1

Bit(s)	Mnemonic	Name	Description
15:0	**CNT**	CNT	**Initial counting value**

MEDIATEK CONFIDENTIAL
FOR dengzheni@ farsightedmobile.com USE ONLY

This document contains information that is proprietary to MediaTek Inc.
Unauthorized reproduction or disclosure of this information in whole or in part is strictly prohibited.

Bit(s)	Mnemonic	Name	Description
			GPT2 counts down from GPTIMER2_DAT. When GPT2 counts down to 0, a GPT2 interrupt will be generated.

A00C0010 **GPTIMER_STA** **GPT Status Register** **00000000**

Bit	31	30	29	28	27	26	25	24	23	22	21	20	19	18	17	16
Name																
Type																
Reset																
Bit	15	14	13	12	11	10	9	8	7	6	5	4	3	2	1	0
Name															**GPT2**	**GPT1**
Type															RC	RC
Reset															0	0

Bit(s)	Mnemonic	Name	Description
1	**GPT2**	GPT2	**GP timer time-out status** Each flag is set when the corresponding timer count-down is completed. Can be cleared when the CPU reads the status register.
0	**GPT1**	GPT1	**GP timer time-out status** Each flag is set when the corresponding timer count-down is completed. Can be cleared when the CPU reads the status register.

A00C0014 **GPTIMER1_PRESCALER** **GPT1 Prescaler Register** **00000004**

Bit	31	30	29	28	27	26	25	24	23	22	21	20	19	18	17	16
Name																
Type																
Reset																
Bit	15	14	13	12	11	10	9	8	7	6	5	4	3	2	1	0
Name														**PRESCALER**		
Type														RW		
Reset														1	0	0

Bit(s)	Mnemonic	Name	Description
2:0	**PRESCALER**	PRESCALER	**Controls the counting clock for GP timer 1** 0: 16,384Hz 1: 8,192Hz 2: 4,096Hz 3: 2,048Hz 4: 1,024Hz 5: 512Hz 6: 256Hz 7: 128Hz

A00C0018 **GPTIMER2_PRESCALER** **GPT2 Prescaler Register** **00000004**

Bit	31	30	29	28	27	26	25	24	23	22	21	20	19	18	17	16
Name																
Type																

This document contains information that is proprietary to MediaTek Inc.
Unauthorized reproduction or disclosure of this information in whole or in part is strictly prohibited.
MEDIATEK CONFIDENTIAL FOR denglizhenli@far-sightedmobile.com USE ONLY

Reset																
Bit	15	14	13	12	11	10	9	8	7	6	5	4	3	2	1	0
Name														**PRESCALER**		
Type														RW		
Reset														1	0	0

Bit(s)	Mnemonic	Name	Description
2:0	**PRESCALER**	PRESCALER	**Controls the counting clock for GP timer 2** 0: 16,384Hz 1: 8,192Hz 2: 4,096Hz 3: 2,048Hz 4: 1,024Hz 5: 512Hz 6: 256Hz 7: 128Hz

A00C0028 GPTIMER4_CON GPT4 Control Register 00000000

Bit	31	30	29	28	27	26	25	24	23	22	21	20	19	18	17	16
Name																
Type																
Reset																
Bit	15	14	13	12	11	10	9	8	7	6	5	4	3	2	1	0
Name															**LOCK**	**EN**
Type															RW	RW
Reset															0	0

Bit(s)	Mnemonic	Name	Description
1	**LOCK**	LOCK	**Controls GPT4 EN bit can be modified or not** If LOCK = 0, EN can be modified. If LOCK = 1, the EN value will be fixed, and the LOCK bit will always be 1 and cannot be modified until hardware reset. 0: Unlock 1: Lock
0	**EN**	EN	**Controls GPT4 to start counting or to stop** 0: Disable GPT4 1: Enable GPT4

A00C002C GPTIMER4_DAT GPT4 Data Register 00000000

Bit	31	30	29	28	27	26	25	24	23	22	21	20	19	18	17	16
Name	**CNT[31:16]**															
Type	RO															
Reset	0	0	0	0	0	0	0	0	0	0	0	0	0	0	0	0
Bit	15	14	13	12	11	10	9	8	7	6	5	4	3	2	1	0
Name	**CNT[15:0]**															
Type	RO															
Reset	0	0	0	0	0	0	0	0	0	0	0	0	0	0	0	0

Bit(s)	Mnemonic	Name	Description
31:0	**CNT**	CNT	If EN = 1, GPT4 will be a free running timer. This register records the

This document contains information that is proprietary to MediaTek Inc.
Unauthorized reproduction or disclosure of this information in whole or in part is strictly prohibited.
MEDIATEK CONFIDENTIAL FOR dengzhenli@ farsightedmobile.com USE ONLY

Bit(s)	Mnemonic	Name	Description
			GPT4 value. If EN = 0, this register will be cleared to 0. This register does not allow continuous read. It requires at least 1 26M clock cycle between 2 APB reads.

3.5.3 Application Note

When the GPT is in running status, GPTIMER_DAT cannot be configured. To start GPT1 or GPT2, SW should make sure the timer has finished counting for at least 3 cycles of the 32kHz clock.

3.6 MCU OSTIMER

3.6.1 Overview

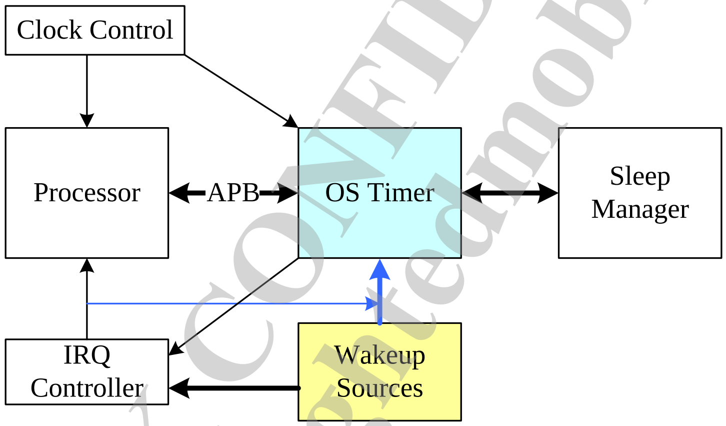

Figure 31. OS timer system view

The OS timer is a hardware timer which specifies the OS time frame duration and generates time-out interrupts by programming the frame counter number. The OS timer has the pause mode. The user can specify pause duration period before the pause mode, and the timer will resume from the pause mode by the external wakeup sources or when the pause duration is timed out.

3.6.2 Terminology

Table 46. Abbreviations

Abbreviation	
R/W	Read/Write
RO	Read only
WO	Write only
W1C	Write 1 to clear
R/W1C	Read/Write 1 to clear
FRC	Free running counter in the system
OST	OS timer

This document contains information that is proprietary to MediaTek Inc.
Unauthorized reproduction or disclosure of this information in whole or in part is strictly prohibited.
MEDIATEK CONFIDENTIAL FOR dengzhenli@ far-sighted mobile.com USE ONLY

3.6.3 Introduction to Wakeup Source

The OS timer only accepts level trigger wakeup source. The wakeup sources are all treated as asynchronous input (will be changed) and will be synchronized by OST clock in OST wakeup source controller.

The possible wakeup sources are listed in the table below.

Table 47. Wakeup sources

No	Wakeup source
0	GPT
1	EINT
2	Timer trigger
3	KP
4	MSDC
5	ANALOG
6	DSP
7	MSDC2
8	SPISLV
9	Reserved
10	Reserved
11	DSP_ASYNC
12	Reserved
13	Reserved
14	Reserved
15	Reserved
16	Reserved

Table 48. Characteristics of wakeup sources

No	Wakeup source	Edge/Level	SW clear	Clock domain
0	GPT	Edge		F32k_CK
1	EINT	Edge/Level		F32k_CK
2	Timer trigger	Level		F32k_CK
3	KP	Edge		
4	MSDC	Level		
5	ANALOG	Edge/Level		
6	DSP	Level		DSP_CK
7	MSDC2	Level		
8	SPISLV	Level		
9	Reserved			
10	Reserved			
11	DSP_ASYNC	Level		DSP_CK
12	Reserved			
13	Reserved			

This document contains information that is proprietary to MediaTek Inc.
Unauthorized reproduction or disclosure of this information in whole or in part is strictly prohibited.
MEDIATEK CONFIDENTIAL FOR dengzhenli@far-sightedmobile.com USE ONLY

No	Wakeup source	Edge/Level	SW clear	Clock domain
14	Reserved			
15	Reserved			
16	Reserved			

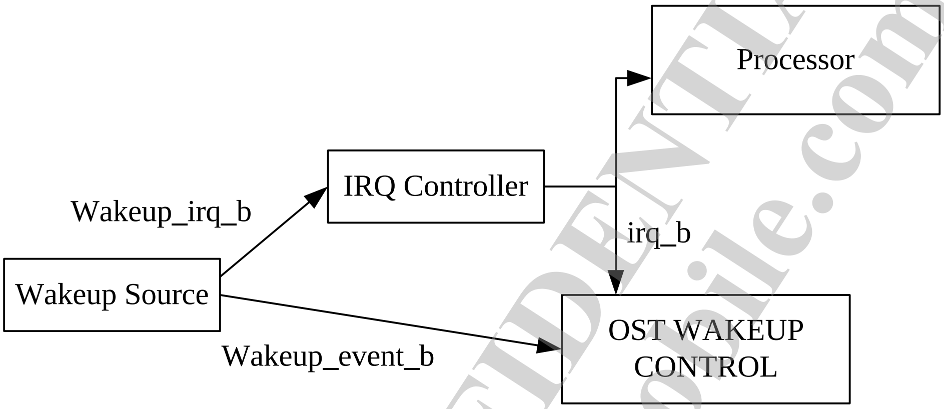

Figure 32. Wakeup event and Irq_b integration diagram

wakeup_irq_b may be asserted before *wakeup_event_b* is asserted from the wakeup source peripheral to ensure the software will enter wakeup ISR after the pause command is set.

Recommended software programming sequence:
1. I-BIT is set when a pause command is executed.
2. Set up IRQ mask registers to select IRQ wakeup sources
3. Pause criteria are met.
4. Set up pause command.
5. Confirm the pause command is executed at OST, and check if the pause command is pending or not.
6. Set up processor in request for interrupt state.
7. The processor clock will be off if there is no interrupt.
8. Check if the pause request command is completed (after the processor clock is active or resumes).
9. Clear I-BIT.

3.6.4 Register Definition

Address	Name	Width	Register function
0XA01F0000	OST_CON	32	**OS timer control register** Only updated when OST_CMD.OST_WR is set and OST_STA.WR_RDY is high.
0XA01F0004	OST_CMD	32	**OS timer command** Only valid when the write data BIT31 to BIT16 is 0x1153.
0XA01F0008	OST_STA	32	**OS timer status**
0XA01F000C	OST_FRM	32	**OS timer frame duration** Specifies OS timer frame duration by micron second resolution. The maximum duration is 8ms and minimum

This document contains information that is proprietary to MediaTek Inc.
Unauthorized reproduction or disclosure of this information in whole or in part is strictly prohibited.

Address	Name	Width	Register function
			duration is 1ms. This register should be set before OS timer is enabled. The hardware will set up OST_ISR[0] periodically at frame duration period when the OS timer is enabled.
0XA01F0010	**OST_FRM_F32K**	32	**OS timer frame duration by 32K clock** Specifies OS timer frame duration with 30.5176 micron second (32kHz) resolution. The maximum duration is 8ms and minimum duration is 1ms. This register should be set before the OS timer is enabled. OST_FRAM_F32K*30.5176us should be less than OST_FRM_NUM*OST_FRM*1us - 30.5176us. Set up OST_FRM_NUM if the frame duration is shorter than system settling time.
0XA01F0014	**OST_UFN**	32	**OS timer un-alignment frame number** Specifies OS timer un-alignment event frame number count. This register value is updated to OS timer only when OST_CMD.OST_WR is set. The read value of this register may not be the current OS time Un-alignment frame number. The hardware will count down the OST_UFN counter at frame time-out and stop the count-down when the current value is 0. When the OS timer is in the pause mode, this counter is still active and wakes up the OS timer when OST_UFN becomes 0 at frame time-out boundary. The software should enable the OS timer pause mode when OST_UFN is larger than 1, or the pause command will be ignored by the hardware.
0XA01F0018	**OST_AFN**	32	**OS timer alignment frame number** Specifies OS timer alignment event frame number count. This register value is updated to the OS timer only when OST_CMD.OST_WR is set. The read value of this register may not be the current OS time alignment frame number. The hardware will count down the OST_AFN counter at frame time-out and stop the count-down when the current value is 0. The hardware will set OST_ISR[1] when OST_AFN is 1 or 0 at frame time-out, and the OS timer is in normal mode. OST_AFN is current hardware AFN down counter value, and the software cannot read this register directly. The software can only read the current frame number through the OST_AFN_R register, and there is synchronization latency from OST_AFN to OST_AFN_R.
0XA01F001C	**OST_AFN_DLY**	32	**OS timer alignment frame delay number count** Specifies the OS timer alignment event frame delay count due to OS timer pause mode. The software has to use the OST_CMD.OST_RD command to update this register value, or the value may be out of date.
0XA01F0020	**OST_UFN_R**	32	**Current OS timer un-alignment frame number** Specifies the OS timer current un-alignment frame number. The software has to use the OST_CMD.OST_RD command to update this register value, or the value may be out of date.
0XA01F0024	**OST_AFN_R**	32	**Current OS timer alignment frame number** Specifies the OS timer current alignment frame number. The software has to use the OST_CMD.OST_RD command to update this register value, or the value may be out of date.
0XA01F0030	**OST_INT_MASK**	32	**OS timer interrupt mask** Specifies the OS timer interrupt mask control.
0XA01F0040	**OST_ISR**	32	**OS timer interrupt status**

This document contains information that is proprietary to MediaTek Inc.
Unauthorized reproduction or disclosure of this information in whole or in part is strictly prohibited.
MEDIATEK CONFIDENTIAL FOR dengzhenli@far-sightmobile.com USE ONLY

Address	Name	Width	Register function
			Specifies the OS timer interrupt status. The software has to write 1 at the corresponding bit to clear the interrupt status bit. OSR_ISR[2-0] are also cleared when the OSR_WR command is executed and AFN, UFN are updated.
0XA01F0050	OST_EVENT_MASK	32	**OS timer event mask** Specifies which wakeup event will be masked to wake up the OS timer in the OS timer pause mode.
0XA01F0054	OST_WAKEUP_STA	32	**OS timer event wakeup status**
0XA01F0060	OST_DBG_WAKEUP	32	**OS timer debug wakeup**

0XA01F0000 OS Timer Control Register OST_CON

Bit	31	30	29	28	27	26	25	24	23	22	21	20	19	18	17	16
Name																
Type																
Reset																
Bit	**15**	**14**	**13**	**12**	**11**	**10**	**9**	**8**	**7**	**6**	**5**	**4**	**3**	**2**	**1**	**0**
Name														OST_DBG	UFN_DOWN	EN
Type														RW	RW	RW
Reset														0	1	0

Overview: This registers is only updated when OST_CMD.OST_WR is set and OST_STA.WR_RDY is high.

Bit(s)	Name	Description
2	OST_DBG	**Enables OST wakeup debugging function** 0: Disable 1: Enable
1	UFN_DOWN	**Enables OST_UFN count-down** 0: Disable OST_UFN count-down 1: Enable OST_UFN count-down
0	EN	**Enables OS timer** 0: OS timer is disabled. Then all internal timers are stopped. 1: OS Timer is enabled. The software has to ensure OST_AFN, OST_UFN, OST_FRAM are configured before enabling the OS timer.

0XA01F0004 OS Timer Command OST_CMD

Bit	31	30	29	28	27	26	25	24	23	22	21	20	19	18	17	16
Name	OST_KEY															
Type	WO															
Reset	0	0	0	0	0	0	0	0	0	0	0	0	0	0	0	0
Bit	**15**	**14**	**13**	**12**	**11**	**10**	**9**	**8**	**7**	**6**	**5**	**4**	**3**	**2**	**1**	**0**
Name	OST_CON_WR	OST_AFN_WR	OST_UFN_WR											OST_WR	OST_RD	PAUSE_STR
Type	RW	RW	RW											WO	WO	WO
Reset	0	0	0											0	0	0

This document contains information that is proprietary to MediaTek Inc.
Unauthorized reproduction or disclosure of this information in whole or in part is strictly prohibited.

Overview: The command is only valid when the write data BIT31 to BIT16 is 0x1153.

Bit(s)	Name	Description
31:16	OST_KEY	
15	OST_CON_WR	Updates OST_CON when the OST_WR command is active.
14	OST_AFN_WR	Updates OST_AFN when the OST_WR command is active.
13	OST_UFN_WR	Updates OST_UFN when the OST_WR command is active.
2	OST_WR	Write 1 to this bit to update the bus clock domain OS timer configuration into the OST SYSCLK domain
1	OST_RD	Write 1 to this bit to update the current OS timer status to the bus clock domain
0	PAUSE_STR	Write 1 to this bit to enable the OS timer pause function. The command will be ignored if the current OST UFN is less than 2. The software has to ensure OST_CMD.OST_WR is completed before the next software pause sequence.

0XA01F0008 OS Timer Status OST_STA

Bit	31	30	29	28	27	26	25	24	23	22	21	20	19	18	17	16
Name																
Type																
Reset																
Bit	**15**	**14**	**13**	**12**	**11**	**10**	**9**	**8**	**7**	**6**	**5**	**4**	**3**	**2**	**1**	**0**
Name	CPU_SLEEP									AFN_DLY_OVER		PAUSE_REQ			CMD_CPL	READY
Type	RO									RO		RO			RO	RO
Reset	0									0		0	0		1	0

MEDIATEK CONFIDENTIAL
FOR dengzhenli@far-sightedmobile.com USE ONLY

This document contains information that is proprietary to MediaTek Inc.
Unauthorized reproduction or disclosure of this information in whole or in part is strictly prohibited.

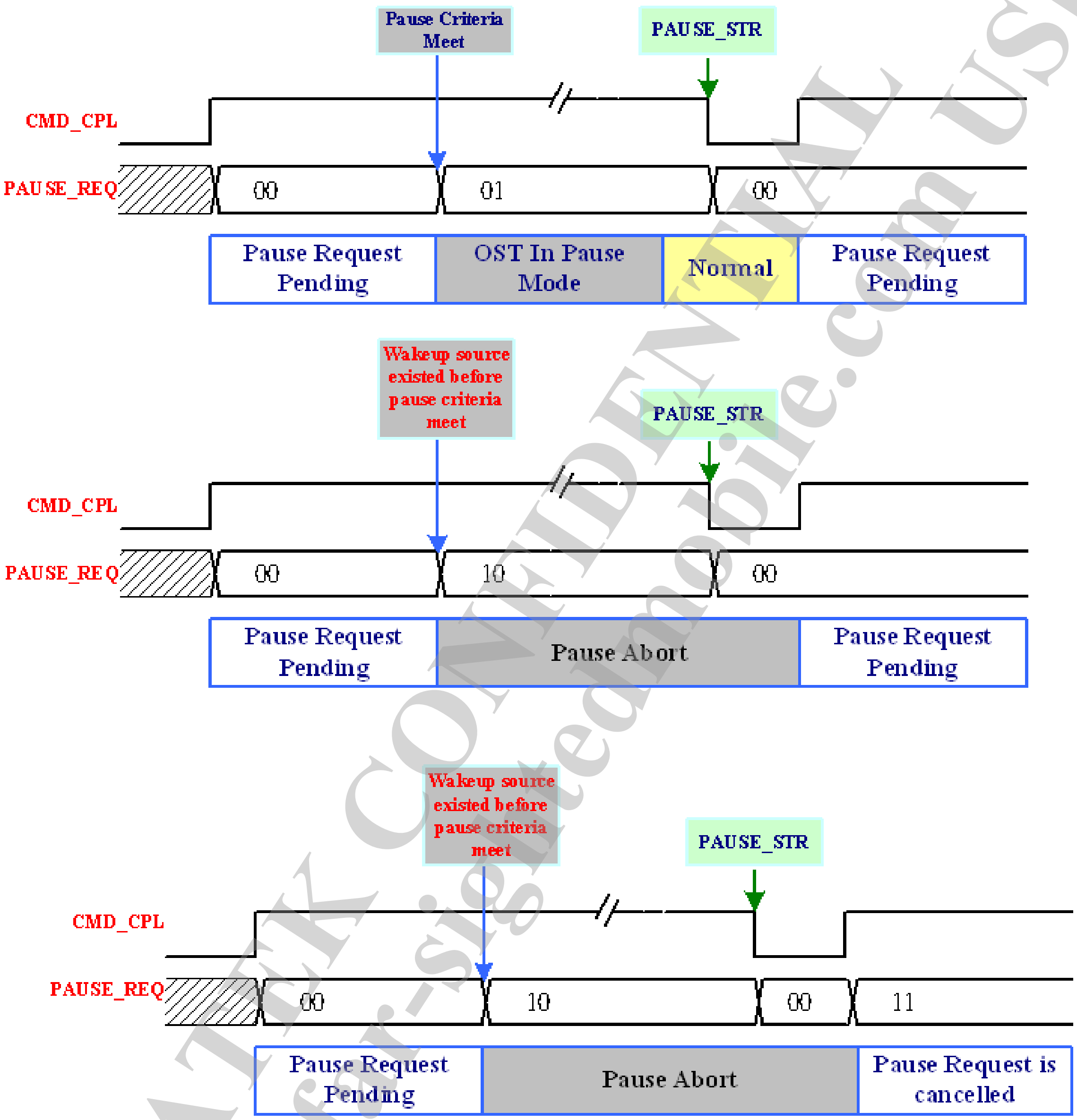

Figure 33. Pause command complete and pause request state

Bit(s)	Name	Description
15	CPU_SLEEP	**The processor is in the sleep mode. (for debugging)** 0: Active 1: Sleep
6	AFN_DLY_OVER	**AFN_DLY counter overflows. This bit is cleared when AFN is updated.** 0: Does not overflow 1: Overflow
4:3	PAUSE_REQ	**An OS timer pause request is pending. A pause command will be completed when the pause command is set.** 1. Processor is in the sleep mode (processor clock is off), UFN ≥ 2 and no wakeup sources 2. Any wakeup sources are sensed after the pause command is set.

This document contains information that is proprietary to MediaTek Inc.
Unauthorized reproduction or disclosure of this information in whole or in part is strictly prohibited.
MEDIATEK CONFIDENTIAL FOR dengzhenli@far-sightedmobile.com USE ONLY

Bit(s)	Name	Description
		3. UFN < 2 00: The last pause command request is not completed yet (CP15 is not enable and no wakeup source). 01: The last pause command request is completed with OST pause mode being active. 10: The last pause command request is completed with wakeup sources. 11: The last pause command request is completed with UFN < 2.
1	CMD_CPL	**OST command is completed. It takes several clocks from OST_CMD being updated to command being active.** 0: OST command is not completed. 1: OST command is completed.
0	READY	**OS timer status** 0: OST is in pause mode. 1: OST is in normal mode.

0XA01F000C OS Timer Frame Duration OST_FRM

Bit	31	30	29	28	27	26	25	24	23	22	21	20	19	18	17	16
Name																
Type																
Reset																
Bit	**15**	**14**	**13**	**12**	**11**	**10**	**9**	**8**	**7**	**6**	**5**	**4**	**3**	**2**	**1**	**0**
Name				OST_FRM												
Type				RW												
Reset				1	0	0	0	0	0	1	0	0	1	0	0	1

Overview: This register specifies the OS timer frame duration by micron second resolution. The maximum duration is 8ms and minimum duration is 1ms. This register should be set before the OS timer is enabled. The hardware will set up OST_ISR[0] periodically at frame duration period when the OS timer is enabled.

Bit(s)	Name	Description
12:0	OST_FRM	

0XA01F0010 OS Timer Frame Duration by 32K Clock OST_FRM_F32K

Bit	31	30	29	28	27	26	25	24	23	22	21	20	19	18	17	16
Name																
Type																
Reset																
Bit	**15**	**14**	**13**	**12**	**11**	**10**	**9**	**8**	**7**	**6**	**5**	**4**	**3**	**2**	**1**	**0**
Name	OST_UFN								OST_FRM_F32K							
Type	RW								RW							
Reset	0	0	1	0	0	0	0	0	0	0	0	0	0	0	0	0

Overview: This register specifies the OS timer frame duration with 30.5176 micron second (32kHz) resolution. The maximum duration is 8ms and minimum duration is 1ms. This register should be set up before the OS timer is enabled. OST_FRAM_F32K*30.5176us should be less than OST_FRM_NUM*OST_FRM*1us - 30.5176us. Set up OST_FRM_NUM if the frame duration is shorter than the system settling time.

This document contains information that is proprietary to MediaTek Inc.
Unauthorized reproduction or disclosure of this information in whole or in part is strictly prohibited.
MEDIATEK CONFIDENTIAL FOR dengzheni@far-sightedmobile.com USE ONLY

Bit(s)	Name	Description
15:12	OST_UFN	
11:0	OST_FRM_F32K	

0XA01F0014 **OS Timer Un-alignment Frame Number** **OST_UFN**

Bit	31	30	29	28	27	26	25	24	23	22	21	20	19	18	17	16
Name	OST_UFN[31:16]															
Type	RW															
Reset	0	0	0	0	0	0	0	0	0	0	0	0	0	0	0	0
Bit	15	14	13	12	11	10	9	8	7	6	5	4	3	2	1	0
Name	OST_UFN[15:0]															
Type	RW															
Reset	0	0	0	0	0	0	0	0	0	0	0	0	0	0	0	0

Overview: This register specifies the OS timer un-alignment event frame number count. This register value is updated to the OS timer only when OST_CMD.OST_WR is set. The read value of this register may not be the current OS time un-alignment frame number. The hardware will count down the OST_UFN counter at frame time-out and stop the count-down when the current value is 0. When the OS timer is in the pause mode, this counter is still active and wakes up the OS timer when OST_UFN becomes 0 at frame time-out boundary. The software should enable the OS timer pause mode when OST_UFN is larger than 1, or the pause command will be ignored by hardware.

Bit(s)	Name	Description
31:0	OST_UFN	

0XA01F0018 **OS Timer Alignment Frame Number** **OST_AFN**

Bit	31	30	29	28	27	26	25	24	23	22	21	20	19	18	17	16
Name	OST_AFN[31:16]															
Type	RW															
Reset	0	0	0	0	0	0	0	0	0	0	0	0	0	0	0	0
Bit	15	14	13	12	11	10	9	8	7	6	5	4	3	2	1	0
Name	OST_AFN[15:0]															
Type	RW															
Reset	0	0	0	0	0	0	0	0	0	0	0	0	0	0	0	0

Overview: This register specifies the OS timer alignment event frame number count. This register value is updated to the OS timer only when OST_CMD.OST_WR is set. The read value of this register may not be the current OS time alignment frame number. The hardware will count down the OST_AFN counter at frame time-out and stop the count-down when the current value is 0. The hardware will set up OST_ISR[1] when OST_AFN is 1 or 0 at frame time-out and the OS timer is in the normal mode. OST_AFN is the current hardware AFN down counter value, and the software cannot read this register directly. The software can only read the current frame number through the OST_AFN_R register, and there is synchronization latency from OST_AFN to OST_AFN_R.

Bit(s)	Name	Description
31:0	OST_AFN	

This document contains information that is proprietary to MediaTek Inc.
Unauthorized reproduction or disclosure of this information in whole or in part is strictly prohibited.
MEDIATEK CONFIDENTIAL FOR dengzhenli@far-sightedmobile.com USE ONLY

0XA01F001C **OS Timer Alignment Frame Delay Number Count** **OST_AFN_DLY**

Bit	31	30	29	28	27	26	25	24	23	22	21	20	19	18	17	16
Name	OST_AFN_DLY[31:16]															
Type	RO															
Reset	0	0	0	0	0	0	0	0	0	0	0	0	0	0	0	0
Bit	15	14	13	12	11	10	9	8	7	6	5	4	3	2	1	0
Name	OST_AFN_DLY[15:0]															
Type	RO															
Reset	0	0	0	0	0	0	0	0	0	0	0	0	0	0	0	0

Overview: This register specifies the OS Timer Alignment event frame delay count due to OS timer pause mode. Software has to use OST_CMD.OST_RD command to update this register value, or the value maybe out of date.

Bit(s)	Name	Description
31:0	OST_AFN_DLY	

0XA01F0020 **Current OS Timer Un-alignment Frame Number** **OST_UFN_R**

Bit	31	30	29	28	27	26	25	24	23	22	21	20	19	18	17	16
Name	OST_UFN_R[31:16]															
Type	RO															
Reset	0	0	0	0	0	0	0	0	0	0	0	0	0	0	0	0
Bit	15	14	13	12	11	10	9	8	7	6	5	4	3	2	1	0
Name	OST_UFN_R[15:0]															
Type	RO															
Reset	0	0	0	0	0	0	0	0	0	0	0	0	0	0	0	0

Overview: This register specifies the OS timer current un-alignment frame number. The software has to use the OST_CMD.OST_RD command to update this register value, or the value may be out of date.

Bit(s)	Name	Description
31:0	OST_UFN_R	

0XA01F0024 **Current OS Timer Alignment Frame Number** **OST_AFN_R**

Bit	31	30	29	28	27	26	25	24	23	22	21	20	19	18	17	16
Name	OST_AFN_R[31:16]															
Type	RO															
Reset	0	0	0	0	0	0	0	0	0	0	0	0	0	0	0	0
Bit	15	14	13	12	11	10	9	8	7	6	5	4	3	2	1	0
Name	OST_AFN_R[15:0]															
Type	RO															
Reset	0	0	0	0	0	0	0	0	0	0	0	0	0	0	0	0

Overview: This register specifies the OS timer current alignment frame number. The software has to use the OST_CMD.OST_RD command to update this register value, or the value may be out of date.

This document contains information that is proprietary to MediaTek Inc.
Unauthorized reproduction or disclosure of this information in whole or in part is strictly prohibited.
MEDIATEK CONFIDENTIAL FOR dengzhenli@ far-sightedmobile.com USE ONLY

Bit(s)	Name	Description
31:0	OST_AFN_R	

0XA01F0030 OS Timer Interrupt Mask OST_INT_MASK

Bit	31	30	29	28	27	26	25	24	23	22	21	20	19	18	17	16
Name																
Type																
Reset																
Bit	15	14	13	12	11	10	9	8	7	6	5	4	3	2	1	0
Name												OST_INT_MASK				
Type												RW				
Reset												1	1	1	1	1

Overview: This register specifies the OS timer interrupt mask control.

Bit(s)	Name	Description
4:0	OST_INT_MASK	0: Mask OS timer frame time-out interrupt 1: Mask OS timer alignment frame time-out interrupt 2: Mask OS timer un-alignment frame time-out interrupt 3: Mask OS timer pause abort interrupt 4: Mask OS timer pause interrupt

0XA01F0040 OS Timer Interrupt Status OST_ISR

Bit	31	30	29	28	27	26	25	24	23	22	21	20	19	18	17	16
Name																
Type																
Reset																
Bit	15	14	13	12	11	10	9	8	7	6	5	4	3	2	1	0
Name												OST_ISR				
Type												W1C				
Reset												0	0	0	0	0

Overview: This register specifies the OS timer interrupt status. The software has to write 1 to the corresponding bit to clear the interrupt status bit. OSR_ISR[2-0] are also cleared when the OSR_WR command is executed and AFN, UFN are updated.

Bit(s)	Name	Description
4:0	OST_ISR	0: OS timer frame time-out interrupt status 1: OS timer alignment frame time-out interrupt status 2: OS timer un-alignment frame time-out interrupt status 3: OS timer pause abort interrupt status 4: OS timer pause interrupt status

0XA01F0050 OS Timer Event Mask OST_EVENT_MASK

Bit	31	30	29	28	27	26	25	24	23	22	21	20	19	18	17	16

MEDIATEK CONFIDENTIAL FOR dengzhenli@far-sightedmobile.com USE ONLY

This document contains information that is proprietary to MediaTek Inc.
Unauthorized reproduction or disclosure of this information in whole or in part is strictly prohibited.

Name														**OST_EVENT_MASK [18:16]**		
Type														RW		
Reset														0	1	1
Bit	15	14	13	12	11	10	9	8	7	6	5	4	3	2	1	0
Name	**OST_EVENT_MASK[15:0]**															
Type	RW															
Reset	1	1	1	1	1	1	1	1	1	1	1	1	1	1	1	1

Overview: This register specifies which wakeup event will be masked to wake up the OS timer in the OS timer pause mode.

Bit(s)	Name	Description
18:0	OST_EVENT_MASK	

0XA01F0054 OS Timer Event Wakeup Status OST_WAKEUP_STA

Bit	31	30	29	28	27	26	25	24	23	22	21	20	19	18	17	16
Name														**OST_WAKEUP_STA [18:16]**		
Type														RO		
Reset														0	0	0
Bit	15	14	13	12	11	10	9	8	7	6	5	4	3	2	1	0
Name	**OST_WAKEUP_STA[15:0]**															
Type	RO															
Reset	0	0	0	0	0	0	0	0	0	0	0	0	0	0	0	0

Bit(s)	Name	Description
18:0	OST_WAKEUP_STA	

0XA01F0060 OS Timer Debug Wakeup OST_DBG_WAKEOSUP

Bit	31	30	29	28	27	26	25	24	23	22	21	20	19	18	17	16
Name	**CIRQ_ MASK _EN**													**OST_DBG_WAKEU P[18:16]**		
Type	RW															
Reset	0													0	0	0
Bit	15	14	13	12	11	10	9	8	7	6	5	4	3	2	1	0
Name	**OST_DBG_WAKEUP[15:0]**															
Type																
Reset	0	0	0	0	0	0	0	0	0	0	0	0	0	0	0	0

Bit(s)	Name	Description
31	CIRQ_MASK_EN	0: Disable cirq mask function 1: Enable cirq mask function
18:0	OST_DBG_WAKEUP	Controls wakeup status in debug timing event1

This document contains information that is proprietary to MediaTek Inc.
Unauthorized reproduction or disclosure of this information in whole or in part is strictly prohibited.

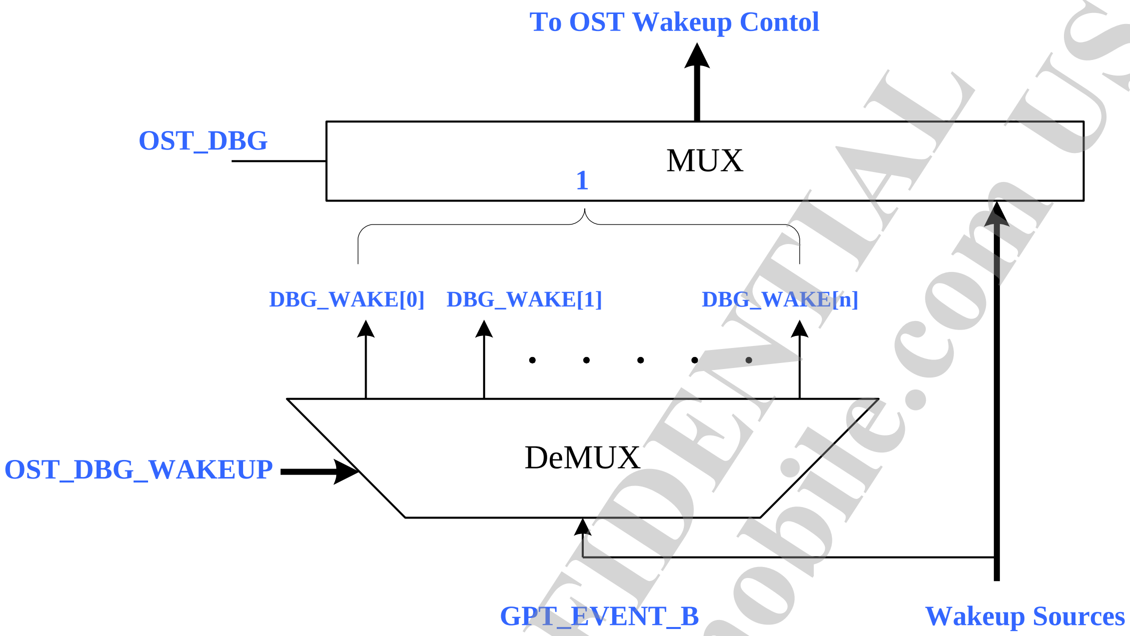

Figure 34. Debug wakeup events

3.7 UART1

3.7.1 General Description

The baseband chipset houses two UARTs. The UARTs provide full duplex serial communication channels between baseband chipset and external dev ices.

The UART has M16C450 and M16550A modes of operation, which are compatible with a range of standard software drivers. The extensions have been designed to be broadly software compatible with 16550A variants, but certain areas offer no consensus.

In common with the M16550A, the UART supports word lengths **from 5 to 8 bits**, **an optional parity bit** and one or two stop bits, and is fully programmable by an 8-bit CPU interface. A 16-bit programmable baud rate generator and an 8-bit scratch register are included, together with separate transmit and receive FIFOs. 8 modem control lines and a diagnostic loop-back mode are provided. UART also includes two DMA handshake lines, indicating when the FIFOs are ready to transfer data to the CPU. Interrupts can be generated from any of the 10 sources.

Note that UART is designed so that all internal operation is synchronized by the CLK signal. This synchronization results in minor timing differences between the UART and industry standard 16550A device, which means that the core is not clock for clock identical to the original device.

After a hardware reset, UART will be in M16C450 mode. Its FIFOs can then be enabled and UART can enter M16550A mode. UART has further functions beyond the M16550A mode. Each of the extended functions can be selected individually under software control.

This document contains information that is proprietary to MediaTek Inc.
Unauthorized reproduction or disclosure of this information in whole or in part is strictly prohibited.
MEDIATEK CONFIDENTIAL FOR denzhenli@far-sightedmobile.com USE ONLY

UART provides more powerful enhancements than the industry-standard 16550:

- Hardware flow control. This feature is very useful when the ISR latency is hard to predict and control in the embedded applications. The MCU is relieved of having to fetch the received data within a fixed amount of time.

Note that in order to enable any of the enhancements, the Enhanced Mode bit, EFR[4], must be set. If EFR[4] is not set, IER[7:5], FCR[5:4], IIR[5:4] and MCR[7:6] cannot be written. The enhanced mode bit ensures that UART is backward compatible with the software that has been written for 16C450 and 16550A devices. **Figure 35** is the block diagram of the UART device.

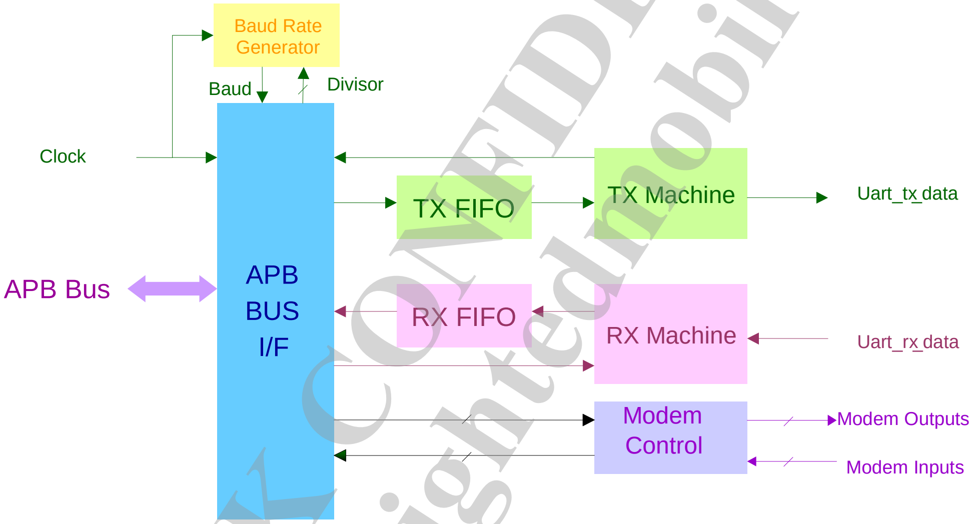

Figure 35. Block Diagram of UART1

3.7.2 Register Definition

Module name: UART1 Base address: (+A0080000h)

Address	Name	Width	Register Function
A0080000	RBR	8	**RX Buffer Register** Note: Only when LCR[7] = 0.
A0080000	THR	8	**TX Holding Register** Note: Only when LCR[7] = 0
A0080000	DLL	8	**Divisor Latch (LS)** Divides the bclk frequency Note: Modified when LCR[7]!=0
A0080004	IER	8	**Interrupt Enable Register** Note: Only when LCR[7] = 0. By storing 1 to a specific bit position, the interrupt associated with that bit is enabled. Otherwise, the interrupt will be disabled. IER[3:0] are modified when LCR[7] = 0. IER[7:4] are modified when LCR[7] = 0 & EFR[4] = 1.

This document contains information that is proprietary to MediaTek Inc.
Unauthorized reproduction or disclosure of this information in whole or in part is strictly prohibited.
MEDIATEK CONFIDENTIAL FOR dengzhenli@far-sightedmobile.com USE ONLY

Address	Name	Width	Register Function
A0080004	DLM	8	**Divisor Latch (MS)** uesd to divid the bclk frequency .*NOTE: modified when LCR[7]!=0
A0080008	IIR	8	**Interrupt Identification Register** Note: Only when LCR!=BF'h. Priority is from high to low as the following. IIR[5:0]=0X1: No interrupt pending IIR[5:0]=0X6: Line status interrupt (under IER[2]=1) IIR[5:0]=0Xc: RX data time-out interrupt (under IER[0]=1) IIR[5:0]=0X4: RX data are placed in the RX bBuffer register or the RX trigger level is reached. (under IER[0]=1). IIR[5:0]=0X2: TX holding register is empty or the contents of the TX FIFO have been reduced to its trigger level (under IER[1]=1). IIR[5:0]=0X10: XOFF character received (under IER[5]=1,EFR[4] = 1).
A0080008	FCR	8	**FIFO Control Register** FCR is used to control the trigger levels of the FIFOs or flush the FIFOs. FCR[7:6] is modified when LCR != BFh FCR[5:4] is modified when LCR != BFh & EFR[4] = 1 FCR[4:0] is modified when LCR != BFh
A0080008	EFR	8	**Enhanced Feature Register** Note: Only when LCR=BF'h
A008000C	LCR	8	**Line Control Register** Determines characteristics of serial communication signals.
A0080010	MCR	8	**Modem Control Register** Controls interface signals of the UART. MCR[5:0] are modified when LCR != 8'hBF, MCR[7] can be read when LCR != 8'hBF & EFR[4] = 1.
A0080010	XON1	8	**XON1 Char Register** Note: XON1 is modified only when LCR=BF'h.
A0080014	LSR	8	**Line Status Register** Modified when LCR != BFh.
A0080018	XOFF1	8	**XOFF1 Char Register** *Note: XOFF1 is modified only when LCR=BF'h.
A008001C	SCR	8	**Scratch Register** A general purpose read/write register. After reset, its value will be un-defined. Modified when LCR != BFh.
A0080020	AUTOBAUD_EN	8	**Auto Baud Detect Enable Register**
A0080024	HIGHSPEED	8	**High Speed Mode Register**
A0080028	SAMPLE_COUNT	8	**Sample Counter Register** When HIGHSPEED=3, sample_count will be the threshold value for UART sample counter (sample_num). Count from 0 to sample_count.
A008002C	SAMPLE_POINT	8	**Sample Point Register** When HIGHSPEED=3, UART gets the input data when sample_count=sample_num, e.g. system clock = 13MHz, 921600 = 13000000/14. Therefore, sample_count = 13, and sample point = 6 (sampling the central point to decrease the

This document contains information that is proprietary to MediaTek Inc.
Unauthorized reproduction or disclosure of this information in whole or in part is strictly prohibited.
MEDIATEK CONFIDENTIAL FOR dengzhenli@far-sightmobile.com USE ONLY

Address	Name	Width	Register Function
			inaccuracy) SAMPLE_POINT is usually (SAMPLE_COUNT-1)/2 without decimal.
A0080030	AUTOBAUD_REG	8	**Auto Baud Monitor Register** the autobaud detection state ,it will not change until enable the autobaud_en again.
A0080034	RATEFIX_AD	8	**Clock Rate Fix Register**
A0080038	AUTOBAUDSAMPLE	8	**Auto Baud Sample Register** Since the system clock may change, autobaud sample duration should change as the system clock changes. When system clock = 13MHz, autobaudsample = 6; when system clock = 26MHz, autobaudsample = 13. When system clock = 52MHz, autobaudsample = 27.
A008003C	GUARD	8	**Guard Time Added Register**
A0080040	ESCAPE_DAT	8	**Escape Character Register**
A0080044	ESCAPE_EN	8	**Escape Enable Register**
A0080048	SLEEP_EN	8	**Sleep Enable Register**
A008004C	DMA_EN	8	**DMA Enable Register**
A0080050	RXTRI_AD	8	**Rx Trigger Address**
A0080054	FRACDIV_L	8	**Fractional Divider LSB Address**
A0080058	FRACDIV_M	8	**Fractional Divider MSB Address**
A008005C	FCR_RD	8	**FIFO Control Register**

A0080000 RBR RX Buffer Register 00

Bit	15	14	13	12	11	10	9	8	7	6	5	4	3	2	1	0
Name									RBR							
Type									RU							
Reset									0	0	0	0	0	0	0	0

Bit(s)	Name	Description
7:0	RBR	**Read-only register** The received data can be read by accessing this register. Only when LCR[7] = 0.

A0080000 THR TX Holding Register 00

Bit	15	14	13	12	11	10	9	8	7	6	5	4	3	2	1	0
Name									THR							
Type									WO							
Reset									0	0	0	0	0	0	0	0

Bit(s)	Name	Description
7:0	THR	**TX Holding Register** Write-only register. The data to be transmitted are written to this register and sent to the PC via serial communication. Only when LCR[7] = 0.

This document contains information that is proprietary to MediaTek Inc.
Unauthorized reproduction or disclosure of this information in whole or in part is strictly prohibited.
MEDIATEK CONFIDENTIAL FOR dengzhenli@far-sightedmobile.com USE ONLY

A0080000 **DLL** **Divisor Latch (LS)** **01**

Bit	15	14	13	12	11	10	9	8	7	6	5	4	3	2	1	0
Name									DLL							
Type									RW							
Reset									0	0	0	0	0	0	0	1

Bit(s)	Name	Description
7:0	DLL	**Divisor latch low 8-bit data** *Note: Modified when LCR[7]!=0.*

A0080004 **IER** **Interrupt Enable Register** **00**

Bit	15	14	13	12	11	10	9	8	7	6	5	4	3	2	1	0
Name									CTSI	RTSI	XOFFI		EDSSI	ELSI	ETBEI	ERBFI
Type									RW	RW	RW		RW	RW	RW	RW
Reset									0	0	0		0	0	0	0

Bit(s)	Name	Description
7	CTSI	**Masks an interrupt that is generated when a rising edge is detected on the CTS modem control line.** *Note: This interrupt is only enabled when hardware flow control is enabled.* 0: Mask an interrupt that is generated when a rising edge is detected on the CTS modem control line. 1: Unmask an interrupt that is generated when a rising edge is detected on the CTS modem control line.
6	RTSI	**Masks an interrupt that is generated when a rising edge is detected on the RTS modem control line.** *Note: This interrupt is only enabled when hardware flow control is enabled.* 0: Mask an interrupt that is generated when a rising edge is detected on the RTS modem control line. 1: Unmask an interrupt that is generated when a rising edge is detected on the RTS modem control line.
5	XOFFI	**Masks an interrupt that is generated when an XOFF character is received.** *Note: This interrupt is only enabled when software flow control is enabled.* 0: Mask an interrupt that is generated when an XOFF character is received. 1: Unmask an interrupt that is generated when an XOFF character is received.
3	EDSSI	**When set to 1, an interrupt will be generated if DCTS (MSR[0]) becomes set.** 0: No interrupt is generated if DCTS (MSR[0]) becomes set. 1: An interrupt is generated if DCTS (MSR[0]) becomes set.
2	ELSI	**When set to1, an interrupt will be generated if BI, FE, PE or OE (LSR[4:1]) becomes set.** 0: No interrupt is generated if BI, FE, PE or OE (LSR[4:1]) becomes set. 1: An interrupt is generated if BI, FE, PE or OE (LSR[4:1]) becomes set.
1	ETBEI	**When set to 1, an interrupt will be generated if the TX holding register is empty or the contents of the TX FIFO have been reduced to its trigger level.** 0: No interrupt will be generated if the TX holding register is empty or the contents of the TX FIFO have been reduced to its trigger level. 1: An interrupt will be generated if the TX folding register is empty or the

This document contains information that is proprietary to MediaTek Inc.
Unauthorized reproduction or disclosure of this information in whole or in part is strictly prohibited.
MEDIATEK CONFIDENTIAL FOR dengzhenli@fatsophtedmobile.com USE ONLY

Bit(s)	Name	Description
		contents of the TX FIFO have been reduced to its trigger level.
0	ERBFI	**When set to 1, an interrupt will be generated if RX data are placed in RX buffer register or the RX trigger level is reached.** 0: No interrupt will be generated if RX data are placed in the RX buffer register or the RX trigger level is reached. 1: An interrupt will be generated if RX Data are placed in the RX buffer register or the RX trigger level is reached.

A0080004 DLM Divisor Latch (MS) 00

Bit	15	14	13	12	11	10	9	8	7	6	5	4	3	2	1	0
Name									DLM							
Type									RW							
Reset									0	0	0	0	0	0	0	0

Bit(s)	Name	Description
7:0	DLM	**Divisor latch high 8-bit data** *Note: Modified when LCR[7]!=0. DLL & DLM can only be updated when DLAB(LCR[7]) is set to 1. Division by 1 will generate a BAUD signal that is constantly high. DLL & DLM setting formula is {DLH,DLL}=(system clock frequency/baud_pulse/baud_rate).* When RATE_FIX(RATEFIX_AD[0])=0, system clock frequency = 52MHz. When RATE_FIX(RATEFIX_AD[0])=1 and RATE_FIX(RATEFIX_AD[2])=0, system clock frequency = 26MHz. When RATE_FIX(RATEFIX_AD[0])=1 and RATE_FIX(RATEFIX_AD[2])=1, system clock frequency = 13MHz. For baud_pulse value, refer to HIGH_SPEED(offset=24H) register For example, when at 52MHz, default speed mode and 115200 baud rate, {DLH,DLL}=52MHz/16/115200=28.

A0080008 IIR Interrupt Identification Register 01

Bit	15	14	13	12	11	10	9	8	7	6	5	4	3	2	1	0
Name									FIFOE		ID					
Type									RO		RU					
Reset									0	0	0	0	0	0	0	1

Bit(s)	Name	Description
7:6	FIFOE	
5:0	ID	**IIR[5:0] Priority level interrupt source** 000001 - No interrupt pending 000110 1 Line status interrupt: BI, FE, PE or OE set in LSR. (Under IER[2]=1) 001100 2 RX data time-out: Time-out on character in RX FIFO. (Under IER[0]=1) 000100 3 RX data received: RX data received or RX trigger level reached. (Under IER[0]=1) 000010 4 TX holding register empty: 000000 5 Modem status change: DCTS set in MSR. (Under IER[3]=1) TX Holding Register empty or TX FIFO trigger level reached. (Under IER[1]=1) 010000 6 Software flow control:

This document contains information that is proprietary to MediaTek Inc.
Unauthorized reproduction or disclosure of this information in whole or in part is strictly prohibited.
MEDIATEK CONFIDENTIAL FOR dengzhenli@fast-sigmobile.com USE ONLY

Bit(s)	Name	Description
		XOFF Character received. (Under IER[5]=1) 100000 7 Hardware flow control: CTS or RTS Rising Edge. (Under IER[7]=1 or IER[6]=1) **Line status interrupt:** A RX line status interrupt (IIR[5:0] = 000110b) will be generated if ELSI (IER[2]) is set and any of BI, FE, PE or OE (LSR[4:1]) becomes set. The interrupt is cleared by reading the line status register. **RX data time-out interrupt:** When the virtual FIFO mode is disabled, RX data time-out interrupt will be generated if all of the following conditions are applied: 1. FIFO contains at least one character. 2. The most recent character is received longer than four character periods ago (including all start, parity and stop bits); 3. The most recent CPU read of the FIFO is longer than four character periods ago. The timeout timer is restarted upon receipt of a new byte from the RX shift register or upon a CPU read from the RX FIFO. The RX data time-out interrupt is enabled by setting EFRBI (IER[0]) to 1 and is cleared by reading RX FIFO. When the virtual FIFO mode is enabled, RX data time-out interrupt will be generated if all of the following conditions are applied: 1. FIFO is empty. 2. The most recent character is received longer than four character periods ago (including all start, parity and stop bits). 3. The most recent CPU read of the FIFO is longer than four character periods ago. The timeout timer is restarted upon receipt of a new byte from the RX shift register or reading DMA_EN register. The RX Data Timeout Interrupt is enabled by setting EFRBI (IER[0]) to 1 and is cleared by reading DMA_EN register. **RX data received interrupt:** A RX received interrupt (IER[5:0] = 000100b) is generated if EFRBI (IER[0]) is set and either RX data are placed in the RX buffer register or the RX trigger level is reached. The interrupt is cleared by reading the RX buffer register or the RX FIFO (if enabled). **TX holding register empty interrupt:** A TX holding register empty interrupt (IIR[5:0] = 000010b) is generated if ETRBI (IER[1]) is set and either the TX holding register is empty or the contents of the TX FIFO are reduced to its trigger level. The interrupt is cleared by writing to the TX holding register or TX FIFO if FIFO is enabled. **Modem status change interrupt:** A modem status change Interrupt (IIR[5:0] = 000000b) will be generated if EDSSI (IER[3]) is set and e DCTS (MSR[3:0]) becomes set. The interrupt is cleared by reading the modem status register. **Software flow control interrupt:** A software flow control interrupt (IIR[5:0] = 010000b) will be generated if the software flow control is enabled and XOFFI (IER[5]) becomes set, indicating that an XOFF character has been received. The interrupt is cleared by reading the interrupt identification register. **Hardware flow control interrupt:** A hardware flow control interrupt (IER[5:0] = 100000b) will be generated if the hardware flow control is enabled and either RTSI (IER[6]) or CTSI (IER[7]) becomes set indicating that a rising edge has been detected on either the RTS/CTS modem control line. The interrupt is cleared by reading the interrupt identification register.

This document contains information that is proprietary to MediaTek Inc.
Unauthorized reproduction or disclosure of this information in whole or in part is strictly prohibited.
MEDIATEK CONFIDENTIAL FOR dengzhenli@satsmartmobile.com USE ONLY

A0080008 FCR FIFO Control Register 00

Bit	15	14	13	12	11	10	9	8	7	6	5	4	3	2	1	0
Name									RFTL1_RFTL0		TFTL1_TFTL0			CLRT	CLRR	FIFOE
Type									WO		WO			WO	WO	WO
Reset									0	0	0	0		0	0	0

Bit(s)	Name	Description
7:6	RFTL1_RFTL0	**RX FIFO trigger threshold** RX FIFO contains total 32 bytes. 0: 1 1: 6 2: 12 3: RXTRIG
5:4	TFTL1_TFTL0	**TX FIFO trigger threshold** TX FIFO contains total 32 bytes. 0: 1 1: 4 2: 8 3: 14
2	CLRT	**Control bit to clear TX FIFO** 0: No effect 1: Clear TX FIFO
1	CLRR	**Control bit to clear RX FIFO** 0: No effect 1: Clear RX FIFO
0	FIFOE	**Enables FIFO** This bit must be set to 1 for any of other bits in the registers to have any effect. 0: Disable both RX and TX FIFOs. 1: Enable both RX and TX FIFOs.

A0080008 EFR Enhanced Feature Register 00

Bit	15	14	13	12	11	10	9	8	7	6	5	4	3	2	1	0
Name									AUTO_CTS	AUTO_RTS		ENABLE_E	SW_FLOW_CONT			
Type									RW	RW		RW	RW			
Reset									0	0		0	0	0	0	0

Bit(s)	Name	Description
7	AUTO_CTS	**Enables hardware transmission flow control** 0: Disable 1: Enable
6	AUTO_RTS	**Enables hardware reception flow control** 0: Disable 1: Enable
4	ENABLE_E	**Enables enhancement feature** 0: Disable 1: Enable

This document contains information that is proprietary to MediaTek Inc.
Unauthorized reproduction or disclosure of this information in whole or in part is strictly prohibited.
MEDIATEK CONFIDENTIAL FOR dengzhenli@far-sightedmobile.com USE ONLY

Bit(s)	Name	Description
3:0	SW_FLOW_CONT	**Software flow control bits** 00xx: No TX flow control 01xx: No TX flow control 10xx: Transmit XON1/XOFF1 as flow control bytes xx00: No RX flow control xx01: No RX flow control xx10: Receive XON1/XOFF1 as flow control bytes

A008000C LCR Line Control Register 00

Bit	15	14	13	12	11	10	9	8	7	6	5	4	3	2	1	0
Name									DLAB	SB	SP	EPS	PEN	STB	WLS1_WLS0	
Type									RW	RW	RW	RW	RW	RW	RW	
Reset									0	0	0	0	0	0	0	0

Bit(s)	Name	Description
7	DLAB	**Divisor latch access bit** 0: RX and TX registers are read/written at Address 0 and the IER register is read/written at Address 4. 1: Divisor Latch LS is read/written at Address 0 and the Divisor Latch MS is read/written at Address 4.
6	SB	**Set break** 0: No effect 1: SOUT signal is forced to the 0 state.
5	SP	**Stick parity** 0: No effect. 1: The parity bit is forced to a defined state, depending on the states of EPS and PEN: If EPS=1 & PEN=1, the parity bit will be set and checked = 0. If EPS=0 & PEN=1, the parity bit will be set and checked = 1.
4	EPS	**Selects even parity** 0: When EPS=0, an odd number of ones is sent and checked. 1: When EPS=1, an even number of ones is sent and checked.
3	PEN	**Enables parity** 0: The parity is neither transmitted nor checked. 1: The parity is transmitted and checked.
2	STB	**Number of STOP bits** 0: One STOP bit is always added. 1: Two STOP bits are added after each character is sent; unless the character length is 5 when 1 STOP bit is added.
1:0	WLS1_WLS0	**Selects word length** 0: 5 bits 1: 6 bits 2: 7 bits 3: 8 bits

A0080010 MCR Modem Control Register 00

Bit	15	14	13	12	11	10	9	8	7	6	5	4	3	2	1	0
Name									XOFF_STATUS			Loop			RTS	

This document contains information that is proprietary to MediaTek Inc.
Unauthorized reproduction or disclosure of this information in whole or in part is strictly prohibited.
MEDIATEK CONFIDENTIAL FOR dengzhenli@fareastmobile.com USE ONLY

	15	14	13	12	11	10	9	8	7	6	5	4	3	2	1	0
Type									RU			RW			RW	
Reset									0			0			0	

Bit(s)	Name	Description
7	XOFF_STATUS	**Read-only bit** 0: When an XON character is received. 1: When an XOFF character is received.
4	Loop	**Loop-back control bit** 0: No loop-back is enabled. 1: Loop-back mode is enabled.
1	RTS	**Controls the state of the output NRTS, even in loop mode.** 0: RTS will always output 1. 1: RTS's output will be controlled by flow control condition.

A0080010 XON1 XON1 Char Register 00

Bit	15	14	13	12	11	10	9	8	7	6	5	4	3	2	1	0
Name									**XON1**							
Type									RW							
Reset									0	0	0	0	0	0	0	0

Bit(s)	Name	Description
7:0	XON1	**XON1 character for software flow control** Modified only when LCR=BF'h.

A0080014 LSR Line Status Register 60

Bit	15	14	13	12	11	10	9	8	7	6	5	4	3	2	1	0
Name									**FIFOERR**	**TEMT**	**THRE**	**BI**	**FE**	**PE**	**OE**	**DR**
Type									RU	RU	RU	RU	RU	RU	RU	RU
Reset									0	1	1	0	0	0	0	0

Bit(s)	Name	Description
7	FIFOERR	**RX FIFO error indicator** 0: No PE, FE, BI set in the RX FIFO. 1: Set to 1 when there is at least one PE, FE or BI in the RX FIFO.
6	TEMT	**TX holding register (or TX FIFO) and the TX shift register are empty.** 0: Empty conditions below are not met. 1: If FIFOs are enabled, the bit will be set whenever the TX FIFO and the TX shift register are empty. If FIFOs are disabled, the bit will be set whenever TX holding register and TX shift register are empty.
5	THRE	**Indicates if there is room for TX holding register or TX FIFO is reduced to its trigger level** 0: Reset whenever the contents of the TX FIFO are more than its trigger level (FIFOs are enabled), or whenever TX holding register is not empty (FIFOs are disabled). 1: Set whenever the contents of the TX FIFO are reduced to its trigger level (FIFOs are enabled), or whenever TX holding register is empty and ready to accept new data (FIFOs are disabled).
4	BI	**Break interrupt**

This document contains information that is proprietary to MediaTek Inc.
Unauthorized reproduction or disclosure of this information in whole or in part is strictly prohibited.
MEDIATEK CONFIDENTIAL FOR dengzhenli@far-sightedmobile.com USE ONLY

Bit(s)	Name	Description
		0: Reset by the CPU reading this register 1: If the FIFOs are disabled, this bit will be set whenever the SIN is held in the 0 state for more than one transmission time (START bit + DATA bits + PARITY + STOP bits). If the FIFOs are enabled, this error will be associated with a corresponding character in the FIFO and is flagged when this byte is at the top of the FIFO. When a break occurs, only one zero character is loaded into the FIFO: The next character transfer is enabled when SIN goes into the marking state and receives the next valid start bit.
3	FE	**Framing error** 0: Reset by the CPU reading this register 1: If the FIFOs are disabled, this bit will be set if the received data do not have a valid STOP bit. If the FIFOs are enabled, the state of this bit will be revealed when the byte it refers to is the next to be read.
2	PE	**Parity error** 0: Reset by the CPU reading this register 1: If the FIFOs are disabled, this bit will be set if the received data do not have a valid parity bit. If the FIFOs are enabled, the state of this bit will be revealed when the referred byte is the next to be read.
1	OE	**Overrun error** 0: Reset by the CPU reading this register. 1: If the FIFOs are disabled, this bit will be set if the RX buffer is not read by the CPU before the new data from the RX shift register overwrites the previous contents. If the FIFOs are enabled, an overrun error will occur when the RX FIFO is full and the RX shift register becomes full. OE will be set as soon as this happens. The character in the shift register is then overwritten, but not transferred to the FIFO.
0	DR	**Data ready** 0: Cleared by the CPU reading the RX buffer or by reading all the FIFO bytes. 1: Set by the RX buffer becoming full or by the FIFO becoming no empty.

A0080018 **XOFF1** **XOFF1 Char Register** **00**

Bit	15	14	13	12	11	10	9	8	7	6	5	4	3	2	1	0
Name									XOFF1							
Type									RW							
Reset									0	0	0	0	0	0	0	0

Bit(s)	Name	Description
7:0	XOFF1	**XOFF1 character for software flow control** Modified only when LCR=BF'h.

A008001C **SCR** **Scratch Register** **00**

Bit	15	14	13	12	11	10	9	8	7	6	5	4	3	2	1	0
Name									SCR							
Type									RW							
Reset									0	0	0	0	0	0	0	0

Bit(s)	Name	Description
7:0	SCR	**General purpose read/write register**

This document contains information that is proprietary to MediaTek Inc.
Unauthorized reproduction or disclosure of this information in whole or in part is strictly prohibited.
MEDIATEK CONFIDENTIAL FOR denzhenli@fair-sightemobile.com USE ONLY

Bit(s)	Name	Description
		After reset, its value will be undefined. Modified when LCR != BFh.

A0080020 **AUTOBAUD_EN** **Auto Baud Detect Enable Register** **00**

Bit	15	14	13	12	11	10	9	8	7	6	5	4	3	2	1	0
Name														SLEEP_ACK_SEL	AUTOBAUD_SEL	AUTOBAUD_EN
Type														RW	RW	RW
Reset														0	0	0

Bit(s)	Name	Description
2	SLEEP_ACK_SEL	**Selects sleep ack when autobaud_en** 0: Support sleep_ack when autobaud_en is opened . 1: Does not support sleep_ack when autobaud_en is opened .
1	AUTOBAUD_SEL	**Selects auto-baud** 0: Support standard baud rate detection 1: Support non_standard baud rate detection (support baud from 110 to 115200; recommended to use 52MHz to auto fix) .
0	AUTOBAUD_EN	**Auto-baud enabling signal** 0: Disable auto-baud function 1: Enable auto-baud function (UARTn+0024h SPEED should be set to 0.) *Note: When AUTOBAUD_EN is active, there should not be A*/a* char before the auto baud char AT/at. If A*/a* is Inevitable, autobaud will fail and please disable AUTOBAUD_EN to reset the autobaud feature and autobaud_en again.*

A0080024 **HIGHSPEED** **High Speed Mode Register** **00**

Bit	15	14	13	12	11	10	9	8	7	6	5	4	3	2	1	0
Name															SPEED	
Type															RW	
Reset															0	0

Bit(s)	Name	Description
1:0	SPEED	**UART sample counter base** 0: Based on 16*baud_pulse, baud_rate = system clock frequency/16/{DLH, DLL} 1: Based on 8*baud_pulse, baud_rate = system clock frequency/8/{DLH, DLL} 2: Based on 4*baud_pulse, baud_rate = system clock frequency/4/{DLH, DLL} 3: Based on sampe_count * baud_pulse, baud_rate = system clock frequency / (sampe_count+1)/{DLM, DLL}

A0080028 **SAMPLE_COUNT** **Sample Counter Register** **00**

Bit	15	14	13	12	11	10	9	8	7	6	5	4	3	2	1	0
Name									SAMPLECOUNT							
Type									RW							
Reset									0	0	0	0	0	0	0	0

This document contains information that is proprietary to MediaTek Inc.
Unauthorized reproduction or disclosure of this information in whole or in part is strictly prohibited.
MEDIATEK CONFIDENTIAL FOR dengzhenli@far-sighted-mobile.com USE ONLY

Bit(s)	Name	Description
7:0	SAMPLECOUNT	Only useful when HIGHSPEED mode = 3.

A008002C SAMPLE_POINT Sample Point Register FF

Bit	15	14	13	12	11	10	9	8	7	6	5	4	3	2	1	0
Name									SAMPLEPOINT							
Type									RW							
Reset									1	1	1	1	1	1	1	1

Bit(s)	Name	Description
7:0	SAMPLEPOINT	SAMPLE_POINT is usually (SAMPLE_COUNT-1)/2 without decimal. Effective only when HIGHSPEED=3.

A0080030 AUTOBAUD_REG Auto Baud Monitor Register 00

Bit	15	14	13	12	11	10	9	8	7	6	5	4	3	2	1	0
Name									BAUD_STAT				BAUD_RATE			
Type									RU				RU			
Reset									0	0	0	0	0	0	0	0

Bit(s)	Name	Description
7:4	BAUD_STAT	**Autobaud state (only true value in standard autobaud detection)** 0: Autobaud is detecting. 1: AT_7N1 2: AT_7O1 3: AT_7E1 4: AT_8N1 5: AT_8O1 6: AT_8E1 7: at_7N1 8: at_7E1 9: at_7O1 10: at_8N1 11: at_8E1 12: at_8O1 13: Autobaud detection fails
3:0	BAUD_RATE	**Autobaud baud rate (only true value in standard autobaud detection)** 0: 115,200 1: 57,600 2: 38,400 3: 19,200 4: 9,600 5: 4,800 6: 2,400 7: 1,200 8: 300 9: 110

This document contains information that is proprietary to MediaTek Inc.
Unauthorized reproduction or disclosure of this information in whole or in part is strictly prohibited.
MEDIATEK CONFIDENTIAL FOR dengzhenli@sz-sightedmobile.com USE ONLY

A0080034 **RATEFIX_AD** **Clock Rate Fix Register** **00**

Bit	15	14	13	12	11	10	9	8	7	6	5	4	3	2	1	0
Name														FREQ_SEL	AUTOBAUD_RATE_FIX	RATE_FIX
Type														RW	RW	RW
Reset														0	0	0

Bit(s)	Name	Description
2	FREQ_SEL	0: Select 26MHz as system clock 1: Select 13MHz as system clock
1	AUTOBAUD_RATE_FIX	0: Use 52MHz as system clock for UART auto baud detection 1: Use 26MHz/13MHz (depending on FREQ_SEL) as system clock for UART auto baud detection
0	RATE_FIX	0: Use 52MHz as system clock for UART TX/RX 1: Use 26MHz/13MHz (depending on FREQ_SEL) as system clock for UART TX/RX

A0080038 **AUTOBAUDSAMPLE** **Auto Baud Sample Register** **0D**

Bit	15	14	13	12	11	10	9	8	7	6	5	4	3	2	1	0
Name											AUTOBAUDSAMPLE					
Type											RW					
Reset											0	0	1	1	0	1

Bit(s)	Name	Description
5:0	AUTOBAUDSAMPLE	**clk diveision for autobaud rate detection** For standard baud rate detection. System clk 52m: 'd 27 System clk 26m: 'd 13 System clk 13m: 'd 6 For non-standard baud rate detection. :15.

A008003C **GUARD** **Guard Time Added Register** **0F**

Bit	15	14	13	12	11	10	9	8	7	6	5	4	3	2	1	0
Name												GUARD_EN	GUARD_CNT			
Type												RW	RW			
Reset												0	1	1	1	1

Bit(s)	Name	Description
4	GUARD_EN	**Guard interval add enabling signal** 0: No guard interval added 1: Add guard interval after stop bit.
3:0	GUARD_CNT	**Guard interval count value** Guard interval = [1/(system clock/div_step/div)]*GUARD_CNT.

This document contains information that is proprietary to MediaTek Inc.
Unauthorized reproduction or disclosure of this information in whole or in part is strictly prohibited.
MEDIATEK CONFIDENTIAL FOR dengzhenli@ fangsightedmobile.com USE ONLY

A0080040 **ESCAPE_DAT** **Escape Character Register** **FF**

Bit	15	14	13	12	11	10	9	8	7	6	5	4	3	2	1	0
Name									ESCAPE_DAT							
Type									RW							
Reset									1	1	1	1	1	1	1	1

Bit(s)	Name	Description
7:0	ESCAPE_DAT	**Escape character added before software flow control data and escape character** If TX data are xon (31h), with esc_en =1, UART will transmit data as esc + CEh (~xon).

A0080044 **ESCAPE_EN** **Escape Enable Register** **00**

Bit	15	14	13	12	11	10	9	8	7	6	5	4	3	2	1	0
Name																ESC_EN
Type																RW
Reset																0

Bit(s)	Name	Description
0	ESC_EN	**Adds escape character in transmitter and removes escape character in receiver by UART** 0: Does not deal with the escape character 1: Add escape character in transmitter and remove escape character in receiver

A0080048 **SLEEP_EN** **Sleep Enable Register** **00**

Bit	15	14	13	12	11	10	9	8	7	6	5	4	3	2	1	0
Name																SLEEP_EN
Type																RW
Reset																0

Bit(s)	Name	Description
0	SLEEP_EN	**For sleep mode issue** 0: Does not deal with sleep mode indicate signal 1: Activate hardware flow control or software control according to software initial setting when the chip enters sleep mode. Release hardware flow when the chip wakes up. However, for software control, UART sends xon when awaken and when FIFO does not reach threshold level.

A008004C **DMA_EN** **DMA Enable Register** **00**

Bit	15	14	13	12	11	10	9	8	7	6	5	4	3	2	1	0
Name													FIFO_lsr_sel	TO_CNT_AUTORST	TX_DMA_EN	RX_DMA_EN

This document contains information that is proprietary to MediaTek Inc.
Unauthorized reproduction or disclosure of this information in whole or in part is strictly prohibited.

Type													RW	RW	RW	RW
Reset													0	0	0	0

Bit(s)	Name	Description
3	FIFO_lsr_sel	**Selects FIFO LSR mode** 0: LSR will hold the first line status error state until you read the LSR register. 1: LSR will update automatically.
2	TO_CNT_AUTORST	**Time-out counter auto reset register** 0: After RX time-out happens, SW shall reset the interrupt by reading UART 0x4C. 1: The time-out counter will be auto reset. Set this register when Rain's new DMA is used.
1	TX_DMA_EN	**TX_DMA mechanism enabling signal** 0: Does not use DMA in TX 1: Use DMA in TX. When this register is enabled, the flow control will be based on the DMA threshold and generate a time-out interrupt for DMA.for DMA.
0	RX_DMA_EN	**RX_DMA mechanism enabling signal** 0: Does not use DMA in RX 1: Use DMA in RX. When this register is enabled, the flow control will be based on the DMA threshold and generate a time-out interrupt

A0080050 **RXTRI_AD** **Rx Trigger Address** **00**

Bit	15	14	13	12	11	10	9	8	7	6	5	4	3	2	1	0
Name													**RXTRIG**			
Type													RW			
Reset													0	0	0	0

Bit(s)	Name	Description
3:0	RXTRIG	When {rtm,rtl}=2'b11, the RX FIFO threshold will be Rxtrig. The value is suggested to be smaller than half of RX FIFO size, which is 32 bytes.

A0080054 **FRACDIV_L** **Fractional Divider LSB Address** **00**

Bit	15	14	13	12	11	10	9	8	7	6	5	4	3	2	1	0
Name									**FRACDIV_L**							
Type									RW							
Reset									0	0	0	0	0	0	0	0

Bit(s)	Name	Description
7:0	FRACDIV_L	Adds sampling count (+1) from state data7 to data0 to contribute fractional divisor.only when high_speed=3.

A0080058 **FRACDIV_M** **Fractional Divider MSB Address** **00**

Bit	15	14	13	12	11	10	9	8	7	6	5	4	3	2	1	0
Name															**FRACDIV_M**	
Type															RW	
Reset															0	0

This document contains information that is proprietary to MediaTek Inc.
Unauthorized reproduction or disclosure of this information in whole or in part is strictly prohibited.
MEDIATEK CONFIDENTIAL FOR dengzhenli@far-sightedmobile.com USE ONLY

Bit(s)	Name	Description
1:0	FRACDIV_M	Adds sampling count when in state stop to parity to contribute fractional divisor.only when high_speed=3.

A008005C FCR_RD FIFO Control Register 00

Bit	15	14	13	12	11	10	9	8	7	6	5	4	3	2	1	0
Name									RFTL1_RFTL0		TFTL1_TFTL0			CLRT	CLRR	FIFOE
Type									RO		RO			RO	RO	RO
Reset									0	0	0	0		0	0	0

Bit(s)	Name	Description
7:6	RFTL1_RFTL0	**RX FIFO trigger threshold** RX FIFO contains total 32 bytes. 0: 1 1: 6 2: 12 3: RXTRIG
5:4	TFTL1_TFTL0	**TX FIFO trigger threshold** TX FIFO contains total 32 bytes. 0: 1 1: 4 2: 8 3: 14
2	CLRT	0: TX FIFO is not cleared. 1: TX FIFO is cleared.
1	CLRR	0: RX FIFO is not cleared. 1: RX FIFO is cleared.
0	FIFOE	**Enables FIFO** This bit must be set to 1 for any of other bits in the registers to have any effect. 0: RX and TX FIFOs are not enabled. 1: RX and TX FIFOs are enabled.

3.8 UART2

3.8.1 General Description

The baseband chipset houses two UARTs. The UARTs provide full duplex serial communication channels between baseband chipset and external dev ices.

The UART has M16C450 and M16550A modes of operation, which are compatible with a range of standard software drivers. The extensions have been designed to be broadly software compatible with 16550A variants, but certain areas offer no consensus.

In common with the M16550A, the UART supports word lengths **from 5 to 8 bits**, **an optional parity bit** and one or two stop bits, and is fully programmable by an 8-bit CPU interface. A 16-bit programmable baud rate generator and an 8-bit scratch register are included, together with separate

This document contains information that is proprietary to MediaTek Inc.
Unauthorized reproduction or disclosure of this information in whole or in part is strictly prohibited.
MEDIATEK CONFIDENTIAL FOR denzhenli@ farsightedmobile.com USE ONLY

transmit and receive FIFOs. 8 modem control lines and a diagnostic loop-back mode are provided. UART also includes two DMA handshake lines, indicating when the FIFOs are ready to transfer data to the CPU. Interrupts can be generated from any of the 10 sources.

Note that UART is designed so that all internal operation is synchronized by the CLK signal. This synchronization results in minor timing differences between the UART and industry standard 16550A device, which means that the core is not clock for clock identical to the original device.

After a hardware reset, UART will be in M16C450 mode. Its FIFOs can then be enabled and UART can enter M16550A mode. UART has further functions beyond the M16550A mode. Each of the extended functions can be selected individually under software control.

UART provides more powerful enhancements than the industry-standard 16550:

- Hardware flow control. This feature is very useful when the ISR latency is hard to predict and control in the embedded applications. The MCU is relieved of having to fetch the received data within a fixed amount of time.

Note that in order to enable any of the enhancements, the Enhanced Mode bit, EFR[4], must be set. If EFR[4] is not set, IER[7:5], FCR[5:4], IIR[5:4] and MCR[7:6] cannot be written. The enhanced mode bit ensures that UART is backward compatible with the software that has been written for 16C450 and 16550A devices. ***Figure*** 36 is the block diagram of the UART device.

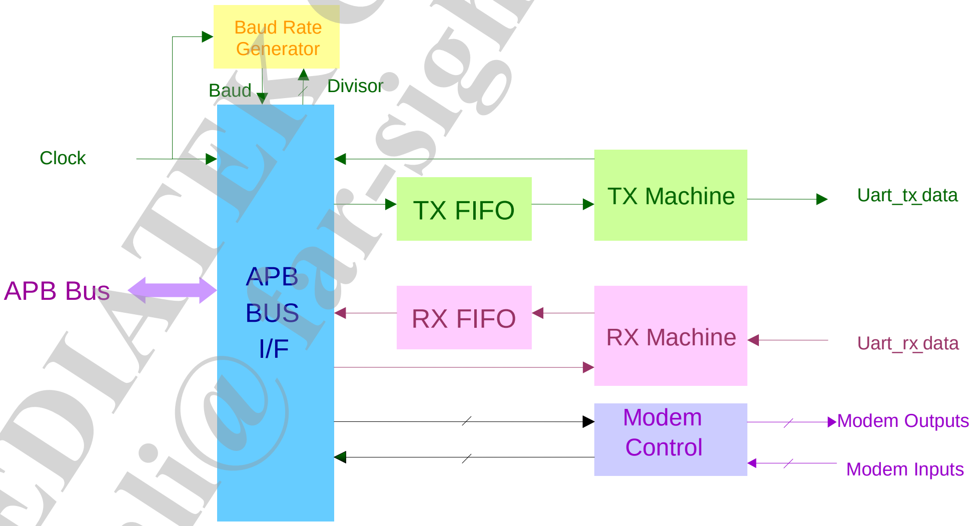

Figure 36. Block Diagram of UART2

3.8.2 Register Definition

Module name: UART2 Base address: (+A0090000h)

Address	Name	Width	Register Function
A0090000	<u>**RBR**</u>	8	**RX Buffer Register**

This document contains information that is proprietary to MediaTek Inc.
Unauthorized reproduction or disclosure of this information in whole or in part is strictly prohibited.

Address	Name	Width	Register Function
			Note: Only when LCR[7] = 0.
A0090000	**THR**	8	**TX Holding Register** Note: Only when LCR[7] = 0
A0090000	**DLL**	8	**Divisor Latch (LS)** Divides the bclk frequency Note: Nodified when LCR[7]!=0
A0090004	**IER**	8	**Interrupt Enable Register** Note: Only when LCR[7] = 0. By storing 1 to a specific bit position, the interrupt associated with that bit is enabled. Otherwise, the interrupt will be disabled. IER[3:0] are modified when LCR[7] = 0. IER[7:4] are modified when LCR[7] = 0 & EFR[4] = 1.
A0090004	**DLM**	8	**Divisor Latch (MS)** uesd to divid the bclk frequency .*NOTE: modified when LCR[7]!=0
A0090008	**IIR**	8	**Interrupt Identification Register** Note: Only when LCR!=BF'h. Priority is from high to low as the following. IIR[5:0]=0X1: No interrupt pending IIR[5:0]=0X6: Line status interrupt (under IER[2]=1) IIR[5:0]=0Xc: RX data time-out interrupt (under IER[0]=1) IIR[5:0]=0X4: RX data are placed in the RX bBuffer register or the RX trigger level is reached. (under IER[0]=1). IIR[5:0]=0X2: TX holding register is empty or the contents of the TX FIFO have been reduced to its trigger level (under IER[1]=1). IIR[5:0]=0X10: XOFF character received (under IER[5]=1,EFR[4] = 1).
A0090008	**FCR**	8	**FIFO Control Register** FCR is used to control the trigger levels of the FIFOs or flush the FIFOs. FCR[7:6] is modified when LCR != BFh FCR[5:4] is modified when LCR != BFh & EFR[4] = 1 FCR[4:0] is modified when LCR != BFh
A0090008	**EFR**	8	**Enhanced Feature Register** Note: Only when LCR=BF'h
A009000C	**LCR**	8	**Line Control Register** Determines characteristics of serial communication signals.
A0090010	**MCR**	8	**Modem Control Register** Controls interface signals of the UART. MCR[5:0] are modified when LCR != 8'hBF, MCR[7] can be read when LCR != 8'hBF & EFR[4] = 1.
A0090010	**XON1**	8	**XON1 Char Register** Note: XON1 is modified only when LCR=BF'h.
A0090014	**LSR**	8	**Line Status Register** Modified when LCR != BFh.
A0090018	**XOFF1**	8	**XOFF1 Char Register** *Note: XOFF1 is modified only when LCR=BF'h.
A009001C	**SCR**	8	**Scratch Register** A general purpose read/write register. After reset, its value

This document contains information that is proprietary to MediaTek Inc.
Unauthorized reproduction or disclosure of this information in whole or in part is strictly prohibited.
MEDIATEK CONFIDENTIAL FOR dengzhenli@far-sight-mobile.com USE ONLY

Address	Name	Width	Register Function
			will be un-defined. Modified when LCR != BFh.
A0090020	AUTOBAUD_EN	8	**Auto Baud Detect Enable Register**
A0090024	HIGHSPEED	8	**High Speed Mode Register**
A0090028	SAMPLE_COUNT	8	**Sample Counter Register** When HIGHSPEED=3, sample_count will be the threshold value for UART sample counter (sample_num). Count from 0 to sample_count.
A009002C	SAMPLE_POINT	8	**Sample Point Register** When HIGHSPEED=3, UART gets the input data when sample_count=sample_num, e.g. system clock = 13MHz, 921600 = 13000000/14. Therefore, sample_count = 13, and sample point = 6 (sampling the central point to decrease the inaccuracy) SAMPLE_POINT is usually (SAMPLE_COUNT-1)/2 without decimal.
A0090030	AUTOBAUD_REG	8	**Auto Baud Monitor Register** the autobaud detection state ,it will not change until enable the autobaud_en again.
A0090034	RATEFIX_AD	8	**Clock Rate Fix Register**
A0090038	AUTOBAUDSAMPLE	8	**Auto Baud Sample Register** Since the system clock may change, autobaud sample duration should change as the system clock changes. When system clock = 13MHz, autobaudsample = 6; when system clock = 26MHz, autobaudsample = 13. When system clock = 52MHz, autobaudsample = 27.
A009003C	GUARD	8	**Guard Time Added Register**
A0090040	ESCAPE_DAT	8	**Escape Character Register**
A0090044	ESCAPE_EN	8	**Escape Enable Register**
A0090048	SLEEP_EN	8	**Sleep Enable Register**
A009004C	DMA_EN	8	**DMA Enable Register**
A0090050	RXTRI_AD	8	**Rx Trigger Address**
A0090054	FRACDIV_L	8	**Fractional Divider LSB Address**
A0090058	FRACDIV_M	8	**Fractional Divider MSB Address**
A009005C	FCR_RD	8	**FIFO Control Register**

A0090000 RBR RX Buffer Register 00

Bit	15	14	13	12	11	10	9	8	7	6	5	4	3	2	1	0
Name									RBR							
Type									RU							
Reset									0	0	0	0	0	0	0	0

Bit(s)	Name	Description
7:0	RBR	**Read-only register** The received data can be read by accessing this register. Only when LCR[7] = 0.

This document contains information that is proprietary to MediaTek Inc.
Unauthorized reproduction or disclosure of this information in whole or in part is strictly prohibited.
MEDIATEK CONFIDENTIAL FOR dengzhenli@far-sightmobile.com USE ONLY

A0090000 THR TX Holding Register 00

Bit	15	14	13	12	11	10	9	8	7	6	5	4	3	2	1	0
Name									THR							
Type									WO							
Reset									0	0	0	0	0	0	0	0

Bit(s)	Name	Description
7:0	THR	**TX Holding Register** Write-only register. The data to be transmitted are written to this register and sent to the PC via serial communication. Only when LCR[7] = 0.

A0090000 DLL Divisor Latch (LS) 01

Bit	15	14	13	12	11	10	9	8	7	6	5	4	3	2	1	0
Name									DLL							
Type									RW							
Reset									0	0	0	0	0	0	0	1

Bit(s)	Name	Description
7:0	DLL	**Divisor latch low 8-bit data** *Note: Modified when LCR[7]!=0.*

A0090004 IER Interrupt Enable Register 00

Bit	15	14	13	12	11	10	9	8	7	6	5	4	3	2	1	0
Name									CTSI	RTSI	XOFFI		EDSSI	ELSI	ETBEI	ERBFI
Type									RW	RW	RW		RW	RW	RW	RW
Reset									0	0	0		0	0	0	0

Bit(s)	Name	Description
7	CTSI	**Masks an interrupt that is generated when a rising edge is detected on the CTS modem control line.** *Note: This interrupt is only enabled when hardware flow control is enabled.* 0: Mask an interrupt that is generated when a rising edge is detected on the CTS modem control line. 1: Unmask an interrupt that is generated when a rising edge is detected on the CTS modem control line.
6	RTSI	**Masks an interrupt that is generated when a rising edge is detected on the RTS modem control line.** *Note: This interrupt is only enabled when hardware flow control is enabled.* 0: Mask an interrupt that is generated when a rising edge is detected on the RTS modem control line. 1: Unmask an interrupt that is generated when a rising edge is detected on the RTS modem control line.
5	XOFFI	**Masks an interrupt that is generated when an XOFF character is received.** *Note: This interrupt is only enabled when software flow control is enabled.* 0: Mask an interrupt that is generated when an XOFF character is received. 1: Unmask an interrupt that is generated when an XOFF character is received.

This document contains information that is proprietary to MediaTek Inc.
Unauthorized reproduction or disclosure of this information in whole or in part is strictly prohibited.
MEDIATEK CONFIDENTIAL FOR dengzhenli@far-sightedmobile.com USE ONLY

Bit(s)	Name	Description
3	EDSSI	**When set to 1, an interrupt will be generated if DCTS (MSR[0]) becomes set.** 0: No interrupt is generated if DCTS (MSR[0]) becomes set. 1: An interrupt is generated if DCTS (MSR[0]) becomes set.
2	ELSI	**When set to1, an interrupt will be generated if BI, FE, PE or OE (LSR[4:1]) becomes set.** 0: No interrupt is generated if BI, FE, PE or OE (LSR[4:1]) becomes set. 1: An interrupt is generated if BI, FE, PE or OE (LSR[4:1]) becomes set.
1	ETBEI	**When set to 1, an interrupt will be generated if the TX holding register is empty or the contents of the TX FIFO have been reduced to its trigger level.** 0: No interrupt will be generated if the TX holding register is empty or the contents of the TX FIFO have been reduced to its trigger level. 1: An interrupt will be generated if the TX folding register is empty or the contents of the TX FIFO have been reduced to its trigger level.
0	ERBFI	**When set to 1, an interrupt will be generated if RX data are placed in RX buffer register or the RX trigger level is reached.** 0: No interrupt will be generated if RX data are placed in the RX buffer register or the RX trigger level is reached. 1: An interrupt will be generated if RX Data are placed in the RX buffer register or the RX trigger level is reached.

A0090004 DLM Divisor Latch (MS) 00

Bit	15	14	13	12	11	10	9	8	7	6	5	4	3	2	1	0
Name									DLM							
Type									RW							
Reset									0	0	0	0	0	0	0	0

Bit(s)	Name	Description
7:0	DLM	**Divisor latch high 8-bit data** *Note: Modified when LCR[7]!=0. DLL & DLM can only be updated when DLAB(LCR[7]) is set to 1. Division by 1 will generate a BAUD signal that is constantly high. DLL & DLM setting formula is {DLH,DLL}=(system clock frequency/baud_pulse/baud_rate).* When RATE_FIX(RATEFIX_AD[0])=0, system clock frequency = 52MHz. When RATE_FIX(RATEFIX_AD[0])=1 and RATE_FIX(RATEFIX_AD[2])=0, system clock frequency = 26MHz. When RATE_FIX(RATEFIX_AD[0])=1 and RATE_FIX(RATEFIX_AD[2])=1, system clock frequency = 13MHz. For baud_pulse value, refer to HIGH_SPEED(offset=24H) register For example, when at 52MHz, default speed mode and 115200 baud rate, {DLH,DLL}=52MHz/16/115200=28.

A0090008 IIR Interrupt Identification Register 01

Bit	15	14	13	12	11	10	9	8	7	6	5	4	3	2	1	0
Name									FIFOE		ID					
Type									RO		RU					
Reset									0	0	0	0	0	0	0	1

This document contains information that is proprietary to MediaTek Inc.
Unauthorized reproduction or disclosure of this information in whole or in part is strictly prohibited.
MEDIATEK CONFIDENTIAL FOR dengzhenli@fairsightedmobile.com USE ONLY

Bit(s)	Name	Description
7:6	FIFOE	
5:0	ID	**IIR[5:0] Priority level interrupt source** 000001 - No interrupt pending 000110 1 Line status interrupt: BI, FE, PE or OE set in LSR. (Under IER[2]=1) 001100 2 RX data time-out: Time-out on character in RX FIFO. (Under IER[0]=1) 000100 3 RX data received: RX data received or RX trigger level reached. (Under IER[0]=1) 000010 4 TX holding register empty: 000000 5 Modem status change: DCTS set in MSR. (Under IER[3]=1) TX Holding Register empty or TX FIFO trigger level reached. (Under IER[1]=1) 010000 6 Software flow control: XOFF Character received. (Under IER[5]=1) 100000 7 Hardware flow control: CTS or RTS Rising Edge. (Under IER[7]=1 or IER[6]=1) **Line status interrupt:** A RX line status interrupt (IIR[5:0] = 000110b) will be generated if ELSI (IER[2]) is set and any of BI, FE, PE or OE (LSR[4:1]) becomes set. The interrupt is cleared by reading the line status register. **RX data time-out interrupt:** When the virtual FIFO mode is disabled, RX data time-out interrupt will be generated if all of the following conditions are applied: 1. FIFO contains at least one character. 2. The most recent character is received longer than four character periods ago (including all start, parity and stop bits); 3. The most recent CPU read of the FIFO is longer than four character periods ago. The timeout timer is restarted upon receipt of a new byte from the RX shift register or upon a CPU read from the RX FIFO. The RX data time-out interrupt is enabled by setting EFRBI (IER[0]) to 1 and is cleared by reading RX FIFO. When the virtual FIFO mode is enabled, RX data time-out interrupt will be generated if all of the following conditions are applied: 1. FIFO is empty. 2. The most recent character is received longer than four character periods ago (including all start, parity and stop bits). 3. The most recent CPU read of the FIFO is longer than four character periods ago. The timeout timer is restarted upon receipt of a new byte from the RX shift register or reading DMA_EN register. The RX Data Timeout Interrupt is enabled by setting EFRBI (IER[0]) to 1 and is cleared by reading DMA_EN register. **RX data received interrupt:** A RX received interrupt (IER[5:0] = 000100b) is generated if EFRBI (IER[0]) is set and either RX data are placed in the RX buffer register or the RX trigger level is reached. The interrupt is cleared by reading the RX buffer register or the RX FIFO (if enabled). **TX holding register empty interrupt:** A TX holding register empty interrupt (IIR[5:0] = 000010b) is generated if ETRBI (IER[1]) is set and either the TX holding register is empty or the contents of the TX FIFO are reduced to its trigger level. The interrupt is cleared by writing to the TX holding register or TX FIFO if FIFO is enabled.

This document contains information that is proprietary to MediaTek Inc.
Unauthorized reproduction or disclosure of this information in whole or in part is strictly prohibited.
MEDIATEK CONFIDENTIAL FOR dengzhenli@-sichentumble.com USE ONLY

Bit(s)	Name	Description
		Modem status change interrupt: A modem status change Interrupt (IIR[5:0] = 000000b) will be generated if EDSSI (IER[3]) is set and e DCTS (MSR[3:0]) becomes set. The interrupt is cleared by reading the modem status register. **Software flow control interrupt:** A software flow control interrupt (IIR[5:0] = 010000b) will be generated if the software flow control is enabled and XOFFI (IER[5]) becomes set, indicating that an XOFF character has been received. The interrupt is cleared by reading the interrupt identification register. **Hardware flow control interrupt:** A hardware flow control interrupt (IER[5:0] = 100000b) will be generated if the hardware flow control is enabled and either RTSI (IER[6]) or CTSI (IER[7]) becomes set indicating that a rising edge has been detected on either the RTS/CTS modem control line. The interrupt is cleared by reading the interrupt identification register.

A0090008 **FCR** **FIFO Control Register** **00**

Bit	15	14	13	12	11	10	9	8	7	6	5	4	3	2	1	0
Name									**RFTL1_RFTL0**		**TFTL1_TFTL0**			**CLRT**	**CLRR**	**FIFOE**
Type									WO		WO			WO	WO	WO
Reset									0	0	0	0		0	0	0

Bit(s)	Name	Description
7:6	RFTL1_RFTL0	**RX FIFO trigger threshold** RX FIFO contains total 32 bytes. 0: 1 1: 6 2: 12 3: RXTRIG
5:4	TFTL1_TFTL0	**TX FIFO trigger threshold** TX FIFO contains total 32 bytes. 0: 1 1: 4 2: 8 3: 14
2	CLRT	**Control bit to clear TX FIFO** 0: No effect 1: Clear TX FIFO
1	CLRR	**Control bit to clear RX FIFO** 0: No effect 1: Clear RX FIFO
0	FIFOE	**Enables FIFO** This bit must be set to 1 for any of other bits in the registers to have any effect. 0: Disable both RX and TX FIFOs. 1: Enable both RX and TX FIFOs.

A0090008 **EFR** **Enhanced Feature Register** **00**

Bit	15	14	13	12	11	10	9	8	7	6	5	4	3	2	1	0
Name									**AUTO**	**AUTO**		**ENAB**	**SW_FLOW_CONT**			

This document contains information that is proprietary to MediaTek Inc.
Unauthorized reproduction or disclosure of this information in whole or in part is strictly prohibited.

									_CTS	_RTS		LE_E				
Type									RW	RW		RW	RW			
Reset									0	0		0	0	0	0	0

Bit(s)	Name	Description
7	AUTO_CTS	**Enables hardware transmission flow control** 0: Disable 1: Enable
6	AUTO_RTS	**Enables hardware reception flow control** 0: Disable 1: Enable
4	ENABLE_E	**Enables enhancement feature** 0: Disable 1: Enable
3:0	SW_FLOW_CONT	**Software flow control bits** 00xx: No TX flow control 01xx: No TX flow control 10xx: Transmit XON1/XOFF1 as flow control bytes xx00: No RX flow control xx01: No RX flow control xx10: Receive XON1/XOFF1 as flow control bytes

A009000C LCR Line Control Register 00

Bit	15	14	13	12	11	10	9	8	7	6	5	4	3	2	1	0
Name									DLAB	SB	SP	EPS	PEN	STB	WLS1_WLS0	
Type									RW	RW	RW	RW	RW	RW	RW	
Reset									0	0	0	0	0	0	0	0

Bit(s)	Name	Description
7	DLAB	**Divisor latch access bit** 0: RX and TX registers are read/written at Address 0 and the IER register is read/written at Address 4. 1: Divisor Latch LS is read/written at Address 0 and the Divisor Latch MS is read/written at Address 4.
6	SB	**Set break** 0: No effect 1: SOUT signal is forced to the 0 state.
5	SP	**Stick parity** 0: No effect. 1: The parity bit is forced to a defined state, depending on the states of EPS and PEN: If EPS=1 & PEN=1, the parity bit will be set and checked = 0. If EPS=0 & PEN=1, the parity bit will be set and checked = 1.
4	EPS	**Selects even parity** 0: When EPS=0, an odd number of ones is sent and checked. 1: When EPS=1, an even number of ones is sent and checked.
3	PEN	**Enables parity** 0: The parity is neither transmitted nor checked. 1: The parity is transmitted and checked.
2	STB	**Number of STOP bits** 0: One STOP bit is always added. 1: Two STOP bits are added after each character is sent; unless the character

This document contains information that is proprietary to MediaTek Inc.
Unauthorized reproduction or disclosure of this information in whole or in part is strictly prohibited.

Bit(s)	Name	Description
		length is 5 when 1 STOP bit is added.
1:0	WLS1_WLS0	**Selects word length** 0: 5 bits 1: 6 bits 2: 7 bits 3: 8 bits

A0090010 MCR Modem Control Register 00

Bit	15	14	13	12	11	10	9	8	7	6	5	4	3	2	1	0
Name									XOFF_STATUS			Loop			RTS	
Type									RU			RW			RW	
Reset									0			0			0	

Bit(s)	Name	Description
7	XOFF_STATUS	**Read-only bit** 0: When an XON character is received. 1: When an XOFF character is received.
4	Loop	**Loop-back control bit** 0: No loop-back is enabled. 1: Loop-back mode is enabled.
1	RTS	**Controls the state of the output NRTS, even in loop mode.** 0: RTS will always output 1. 1: RTS's output will be controlled by flow control condition.

A0090010 XON1 XON1 Char Register 00

Bit	15	14	13	12	11	10	9	8	7	6	5	4	3	2	1	0
Name									XON1							
Type									RW							
Reset									0	0	0	0	0	0	0	0

Bit(s)	Name	Description
7:0	XON1	**XON1 character for software flow control** Modified only when LCR=BF'h.

A0090014 LSR Line Status Register 60

Bit	15	14	13	12	11	10	9	8	7	6	5	4	3	2	1	0
Name									FIFOERR	TEMT	THRE	BI	FE	PE	OE	DR
Type									RU	RU	RU	RU	RU	RU	RU	RU
Reset									0	1	1	0	0	0	0	0

Bit(s)	Name	Description
7	FIFOERR	**RX FIFO error indicator** 0: No PE, FE, BI set in the RX FIFO.

This document contains information that is proprietary to MediaTek Inc.
Unauthorized reproduction or disclosure of this information in whole or in part is strictly prohibited.
MEDIATEK CONFIDENTIAL FOR dengzhenli@far-sightedmobile.com USE ONLY

Bit(s)	Name	Description
		1: Set to 1 when there is at least one PE, FE or BI in the RX FIFO.
6	TEMT	**TX holding register (or TX FIFO) and the TX shift register are empty.** 0: Empty conditions below are not met. 1: If FIFOs are enabled, the bit will be set whenever the TX FIFO and the TX shift register are empty. If FIFOs are disabled, the bit will be set whenever TX holding register and TX shift register are empty.
5	THRE	**Indicates if there is room for TX holding register or TX FIFO is reduced to its trigger level** 0: Reset whenever the contents of the TX FIFO are more than its trigger level (FIFOs are enabled), or whenever TX holding register is not empty (FIFOs are disabled). 1: Set whenever the contents of the TX FIFO are reduced to its trigger level (FIFOs are enabled), or whenever TX holding register is empty and ready to accept new data (FIFOs are disabled).
4	BI	**Break interrupt** 0: Reset by the CPU reading this register 1: If the FIFOs are disabled, this bit will be set whenever the SIN is held in the 0 state for more than one transmission time (START bit + DATA bits + PARITY + STOP bits). If the FIFOs are enabled, this error will be associated with a corresponding character in the FIFO and is flagged when this byte is at the top of the FIFO. When a break occurs, only one zero character is loaded into the FIFO: The next character transfer is enabled when SIN goes into the marking state and receives the next valid start bit.
3	FE	**Framing error** 0: Reset by the CPU reading this register 1: If the FIFOs are disabled, this bit will be set if the received data do not have a valid STOP bit. If the FIFOs are enabled, the state of this bit will be revealed when the byte it refers to is the next to be read.
2	PE	**Parity error** 0: Reset by the CPU reading this register 1: If the FIFOs are disabled, this bit will be set if the received data do not have a valid parity bit. If the FIFOs are enabled, the state of this bit will be revealed when the referred byte is the next to be read.
1	OE	**Overrun error** 0: Reset by the CPU reading this register. 1: If the FIFOs are disabled, this bit will be set if the RX buffer is not read by the CPU before the new data from the RX shift register overwrites the previous contents. If the FIFOs are enabled, an overrun error will occur when the RX FIFO is full and the RX shift register becomes full. OE will be set as soon as this happens. The character in the shift register is then overwritten, but not transferred to the FIFO.
0	DR	**Data ready** 0: Cleared by the CPU reading the RX buffer or by reading all the FIFO bytes. 1: Set by the RX buffer becoming full or by the FIFO becoming no empty.

A0090018 XOFF1 XOFF1 Char Register 00

Bit	15	14	13	12	11	10	9	8	7	6	5	4	3	2	1	0
Name									XOFF1							
Type									RW							
Reset									0	0	0	0	0	0	0	0

This document contains information that is proprietary to MediaTek Inc.
Unauthorized reproduction or disclosure of this information in whole or in part is strictly prohibited.
MEDIATEK CONFIDENTIAL FOR dengzhenli@fair-greatmobile.com USE ONLY

Bit(s)	Name	Description
7:0	XOFF1	**XOFF1 character for software flow control** Modified only when LCR=BF'h.

A009001C SCR Scratch Register 00

Bit	15	14	13	12	11	10	9	8	7	6	5	4	3	2	1	0
Name									SCR							
Type									RW							
Reset									0	0	0	0	0	0	0	0

Bit(s)	Name	Description
7:0	SCR	**General purpose read/write register** After reset, its value will be undefined. Modified when LCR != BFh.

A0090020 AUTOBAUD_EN Auto Baud Detect Enable Register 00

Bit	15	14	13	12	11	10	9	8	7	6	5	4	3	2	1	0
Name														SLEEP_ACK_SEL	AUTOBAUD_SEL	AUTOBAUD_EN
Type														RW	RW	RW
Reset														0	0	0

Bit(s)	Name	Description
2	SLEEP_ACK_SEL	**Selects sleep ack when autobaud_en** 0: Support sleep_ack when autobaud_en is opened . 1: Does not support sleep_ack when autobaud_en is opened .
1	AUTOBAUD_SEL	**Selects auto-baud** 0: Support standard baud rate detection 1: Support non_standard baud rate detection (support baud from 110 to 115200; recommended to use 52MHz to auto fix) .
0	AUTOBAUD_EN	**Auto-baud enabling signal** 0: Disable auto-baud function 1: Enable auto-baud function (UARTn+0024h SPEED should be set to 0.) *Note: When AUTOBAUD_EN is active, there should not be A*/a* char before the auto baud char AT/at. If A*/a* is Inevitable, autobaud will fail and please disable AUTOBAUD_EN to reset the autobaud feature and autobaud_en again.*

A0090024 HIGHSPEED High Speed Mode Register 00

Bit	15	14	13	12	11	10	9	8	7	6	5	4	3	2	1	0
Name															SPEED	
Type															RW	
Reset															0	0

Bit(s)	Name	Description
1:0	SPEED	**UART sample counter base** 0: Based on 16*baud_pulse, baud_rate = system clock frequency/16/{DLH,

This document contains information that is proprietary to MediaTek Inc.
Unauthorized reproduction or disclosure of this information in whole or in part is strictly prohibited.
MEDIATEK CONFIDENTIAL FOR dengzheli@cari-sightedmobile.com USE ONLY

Bit(s)	Name	Description
		DLL} 1: Based on 8*baud_pulse, baud_rate = system clock frequency/8/{DLH, DLL} 2: Based on 4*baud_pulse, baud_rate = system clock frequency/4/{DLH, DLL} 3: Based on sampe_count * baud_pulse, baud_rate = system clock frequency / (sampe_count+1)/{DLM, DLL}

A0090028 SAMPLE_COUNT Sample Counter Register 00

Bit	15	14	13	12	11	10	9	8	7	6	5	4	3	2	1	0
Name									SAMPLECOUNT							
Type									RW							
Reset									0	0	0	0	0	0	0	0

Bit(s)	Name	Description
7:0	SAMPLECOUNT	Only useful when HIGHSPEED mode = 3.

A009002C SAMPLE_POINT Sample Point Register FF

Bit	15	14	13	12	11	10	9	8	7	6	5	4	3	2	1	0
Name									SAMPLEPOINT							
Type									RW							
Reset									1	1	1	1	1	1	1	1

Bit(s)	Name	Description
7:0	SAMPLEPOINT	SAMPLE_POINT is usually (SAMPLE_COUNT-1)/2 without decimal. Effective only when HIGHSPEED=3.

A0090030 AUTOBAUD_REG Auto Baud Monitor Register 00

Bit	15	14	13	12	11	10	9	8	7	6	5	4	3	2	1	0
Name									BAUD_STAT				BAUD_RATE			
Type									RU				RU			
Reset									0	0	0	0	0	0	0	0

Bit(s)	Name	Description
7:4	BAUD_STAT	**Autobaud state (only true value in standard autobaud detection)** 0: Autobaud is detecting. 1: AT_7N1 2: AT_7O1 3: AT_7E1 4: AT_8N1 5: AT_8O1 6: AT_8E1 7: at_7N1 8: at_7E1 9: at_7O1 10: at_8N1 11: at_8E1

This document contains information that is proprietary to MediaTek Inc.
Unauthorized reproduction or disclosure of this information in whole or in part is strictly prohibited.
MEDIATEK CONFIDENTIAL FOR dengzhenli@far-sightedmobile.com USE ONLY

Bit(s)	Name	Description
		12: at_8O1 13: Autobaud detection fails
3:0	BAUD_RATE	**Autobaud baud rate (only true value in standard autobaud detection)** 0: 115,200 1: 57,600 2: 38,400 3: 19,200 4: 9,600 5: 4,800 6: 2,400 7: 1,200 8: 300 9: 110

A0090034 **RATEFIX_AD** **Clock Rate Fix Register** **00**

Bit	15	14	13	12	11	10	9	8	7	6	5	4	3	2	1	0
Name														FREQ_SEL	AUTOBAUD_RATE_FIX	RATE_FIX
Type														RW	RW	RW
Reset														0	0	0

Bit(s)	Name	Description
2	FREQ_SEL	0: Select 26MHz as system clock 1: Select 13MHz as system clock
1	AUTOBAUD_RATE_FIX	0: Use 52MHz as system clock for UART auto baud detection 1: Use 26MHz/13MHz (depending on FREQ_SEL) as system clock for UART auto baud detection
0	RATE_FIX	0: Use 52MHz as system clock for UART TX/RX 1: Use 26MHz/13MHz (depending on FREQ_SEL) as system clock for UART TX/RX

A0090038 **AUTOBAUDSAMPLE** **Auto Baud Sample Register** **0D**

Bit	15	14	13	12	11	10	9	8	7	6	5	4	3	2	1	0
Name											AUTOBAUDSAMPLE					
Type											RW					
Reset											0	0	1	1	0	1

Bit(s)	Name	Description
5:0	AUTOBAUDSAMPLE	**clk diveision for autobaud rate detection** For standard baud rate detection. System clk 52m: 'd 27 System clk 26m: 'd 13 System clk 13m: 'd 6 For non-standard baud rate detection. :15.

This document contains information that is proprietary to MediaTek Inc.
Unauthorized reproduction or disclosure of this information in whole or in part is strictly prohibited.
MEDIATEK CONFIDENTIAL FOR dengzhenli@far-sightedmobile.com USE ONLY

A009003C GUARD Guard Time Added Register 0F

Bit	15	14	13	12	11	10	9	8	7	6	5	4	3	2	1	0
Name												GUARD_EN	GUARD_CNT			
Type												RW	RW			
Reset												0	1	1	1	1

Bit(s)	Name	Description
4	GUARD_EN	**Guard interval add enabling signal** 0: No guard interval added 1: Add guard interval after stop bit.
3:0	GUARD_CNT	**Guard interval count value** Guard interval = [1/(system clock/div_step/div)]*GUARD_CNT.

A0090040 ESCAPE_DAT Escape Character Register FF

Bit	15	14	13	12	11	10	9	8	7	6	5	4	3	2	1	0
Name									ESCAPE_DAT							
Type									RW							
Reset									1	1	1	1	1	1	1	1

Bit(s)	Name	Description
7:0	ESCAPE_DAT	**Escape character added before software flow control data and escape character** If TX data are xon (31h), with esc_en =1, UART will transmit data as esc + CEh (~xon).

A0090044 ESCAPE_EN Escape Enable Register 00

Bit	15	14	13	12	11	10	9	8	7	6	5	4	3	2	1	0
Name																ESC_EN
Type																RW
Reset																0

Bit(s)	Name	Description
0	ESC_EN	**Adds escape character in transmitter and removes escape character in receiver by UART** 0: Does not deal with the escape character 1: Add escape character in transmitter and remove escape character in receiver

A0090048 SLEEP_EN Sleep Enable Register 00

Bit	15	14	13	12	11	10	9	8	7	6	5	4	3	2	1	0
Name																SLEEP_EN
Type																RW
Reset																0

This document contains information that is proprietary to MediaTek Inc.
Unauthorized reproduction or disclosure of this information in whole or in part is strictly prohibited.

Bit(s)	Name	Description
0	SLEEP_EN	**For sleep mode issue** 0: Does not deal with sleep mode indicate signal 1: Activate hardware flow control or software control according to software initial setting when the chip enters sleep mode. Release hardware flow when the chip wakes up. However, for software control, UART sends xon when awaken and when FIFO does not reach threshold level.

A009004C DMA_EN DMA Enable Register 00

Bit	15	14	13	12	11	10	9	8	7	6	5	4	3	2	1	0
Name													FIFO_lsr_sel	TO_CNT_AUTORST	TX_DMA_EN	RX_DMA_EN
Type													RW	RW	RW	RW
Reset													0	0	0	0

Bit(s)	Name	Description
3	FIFO_lsr_sel	**Selects FIFO LSR mode** 0: LSR will hold the first line status error state until you read the LSR register. 1: LSR will update automatically.
2	TO_CNT_AUTORST	**Time-out counter auto reset register** 0: After RX time-out happens, SW shall reset the interrupt by reading UART 0x4C. 1: The time-out counter will be auto reset. Set this register when Rain's new DMA is used.
1	TX_DMA_EN	**TX_DMA mechanism enabling signal** 0: Does not use DMA in TX 1: Use DMA in TX. When this register is enabled, the flow control will be based on the DMA threshold and generate a time-out interrupt for DMA.for DMA.
0	RX_DMA_EN	**RX_DMA mechanism enabling signal** 0: Does not use DMA in RX 1: Use DMA in RX. When this register is enabled, the flow control will be based on the DMA threshold and generate a time-out interrupt

A0090050 RXTRI_AD Rx Trigger Address 00

Bit	15	14	13	12	11	10	9	8	7	6	5	4	3	2	1	0
Name													RXTRIG			
Type													RW			
Reset													0	0	0	0

Bit(s)	Name	Description
3:0	RXTRIG	When {rtm,rtl}=2'b11, the RX FIFO threshold will be Rxtrig. The value is suggested to be smaller than half of RX FIFO size, which is 32 bytes.

A0090054 FRACDIV_L Fractional Divider LSB Address 00

This document contains information that is proprietary to MediaTek Inc.
Unauthorized reproduction or disclosure of this information in whole or in part is strictly prohibited.
MEDIATEK CONFIDENTIAL FOR dengzhenli@ fareastmobile.com USE ONLY

Bit	15	14	13	12	11	10	9	8	7	6	5	4	3	2	1	0
Name									**FRACDIV_L**							
Type									RW							
Reset									0	0	0	0	0	0	0	0

Bit(s)	Name	Description
7:0	FRACDIV_L	Adds sampling count (+1) from state data7 to data0 to contribute fractional divisor.only when high_speed=3.

A0090058 **FRACDIV_M** **Fractional Divider MSB Address** **00**

Bit	15	14	13	12	11	10	9	8	7	6	5	4	3	2	1	0
Name															**FRACDIV_M**	
Type															RW	
Reset															0	0

Bit(s)	Name	Description
1:0	FRACDIV_M	Adds sampling count when in state stop to parity to contribute fractional divisor.only when high_speed=3.

A009005C **FCR_RD** **FIFO Control Register** **00**

Bit	15	14	13	12	11	10	9	8	7	6	5	4	3	2	1	0
Name									**RFTL1_RFTL0**		**TFTL1_TFTL0**			**CLRT**	**CLRR**	**FIFOE**
Type									RO		RO			RO	RO	RO
Reset									0	0	0	0		0	0	0

Bit(s)	Name	Description
7:6	RFTL1_RFTL0	**RX FIFO trigger threshold** RX FIFO contains total 32 bytes. 0: 1 1: 6 2: 12 3: RXTRIG
5:4	TFTL1_TFTL0	**TX FIFO trigger threshold** TX FIFO contains total 32 bytes. 0: 1 1: 4 2: 8 3: 14
2	CLRT	0: TX FIFO is not cleared. 1: TX FIFO is cleared.
1	CLRR	0: RX FIFO is not cleared. 1: RX FIFO is cleared.
0	FIFOE	**Enables FIFO** This bit must be set to 1 for any of other bits in the registers to have any effect. 0: RX and TX FIFOs are not enabled. 1: RX and TX FIFOs are enabled.

This document contains information that is proprietary to MediaTek Inc.
Unauthorized reproduction or disclosure of this information in whole or in part is strictly prohibited.
MEDIATEK CONFIDENTIAL FOR dengzhenli@fartsightedmobile.com USE ONLY

3.9 UART3

3.9.1 General Description

The baseband chipset houses two UARTs. The UARTs provide full duplex serial communication channels between baseband chipset and external dev ices.

The UART has M16C450 and M16550A modes of operation, which are compatible with a range of standard software drivers. The extensions have been designed to be broadly software compatible with 16550A variants, but certain areas offer no consensus.

In common with the M16550A, the UART supports word lengths **from 5 to 8 bits**, **an optional parity bit** and one or two stop bits, and is fully programmable by an 8-bit CPU interface. A 16-bit programmable baud rate generator and an 8-bit scratch register are included, together with separate transmit and receive FIFOs. 8 modem control lines and a diagnostic loop-back mode are provided. UART also includes two DMA handshake lines, indicating when the FIFOs are ready to transfer data to the CPU. Interrupts can be generated from any of the 10 sources.

Note that UART is designed so that all internal operation is synchronized by the CLK signal. This synchronization results in minor timing differences between the UART and industry standard 16550A device, which means that the core is not clock for clock identical to the original device.

After a hardware reset, UART will be in M16C450 mode. Its FIFOs can then be enabled and UART can enter M16550A mode. UART has further functions beyond the M16550A mode. Each of the extended functions can be selected individually under software control.

UART provides more powerful enhancements than the industry-standard 16550:

- Hardware flow control. This feature is very useful when the ISR latency is hard to predict and control in the embedded applications. The MCU is relieved of having to fetch the received data within a fixed amount of time.

Note that in order to enable any of the enhancements, the Enhanced Mode bit, EFR[4], must be set. If EFR[4] is not set, IER[7:5], FCR[5:4], IIR[5:4] and MCR[7:6] cannot be written. The enhanced mode bit ensures that UART is backward compatible with the software that has been written for 16C450 and 16550A devices. **Figure 35** is the block diagram of the UART device.

MEDIATEK CONFIDENTIAL FOR dengzhenli@far-sightedmobile.com USE ONLY

This document contains information that is proprietary to MediaTek Inc.
Unauthorized reproduction or disclosure of this information in whole or in part is strictly prohibited.

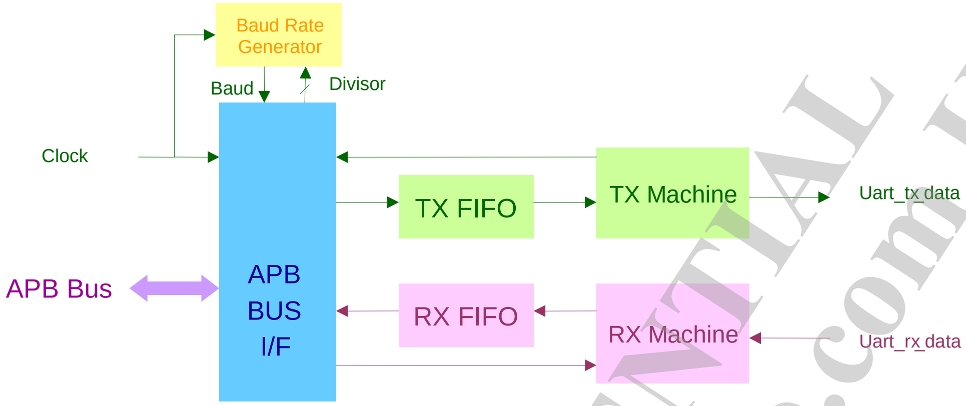

Figure 37. Block Diagram of UART3

3.9.2 Register Definition

Module name: UART3 Base address: (+A00A0000h)

Address	Name	Width	Register Function
A00A0000	RBR	8	**RX Buffer Register** Note: Only when LCR[7] = 0.
A00A0000	THR	8	**TX Holding Register** Note: Only when LCR[7] = 0
A00A0000	DLL	8	**Divisor Latch (LS)** Divides the bclk frequency Note: Nodified when LCR[7]!=0
A00A0004	IER	8	**Interrupt Enable Register** Note: Only when LCR[7] = 0. By storing 1 to a specific bit position, the interrupt associated with that bit is enabled. Otherwise, the interrupt will be disabled. IER[3:0] are modified when LCR[7] = 0. IER[7:4] are modified when LCR[7] = 0 & EFR[4] = 1.
A00A0004	DLM	8	**Divisor Latch (MS)** uesd to divid the bclk frequency .*NOTE: modified when LCR[7]!=0
A00A0008	IIR	8	**Interrupt Identification Register** Note: Only when LCR!=BF'h. Priority is from high to low as the following. IIR[5:0]=0X1: No interrupt pending IIR[5:0]=0X6: Line status interrupt (under IER[2]=1) IIR[5:0]=0Xc: RX data time-out interrupt (under IER[0]=1) IIR[5:0]=0X4: RX data are placed in the RX bBuffer register or the RX trigger level is reached. (under IER[0]=1). IIR[5:0]=0X2: TX holding register is empty or the contents of the TX FIFO have been reduced to its trigger level (under IER[1]=1). IIR[5:0]=0X10: XOFF character received (under IER[5]=1,EFR[4] = 1).
A00A0008	FCR	8	**FIFO Control Register** FCR is used to control the trigger levels of the FIFOs or flush

This document contains information that is proprietary to MediaTek Inc.
Unauthorized reproduction or disclosure of this information in whole or in part is strictly prohibited.
MEDIATEK CONFIDENTIAL FOR dengzhenli@ far-sighted mobile.com USE ONLY

Address	Name	Width	Register Function
			the FIFOs. FCR[7:6] is modified when LCR != BFh FCR[5:4] is modified when LCR != BFh & EFR[4] = 1 FCR[4:0] is modified when LCR != BFh
A00A0008	EFR	8	**Enhanced Feature Register** Note: Only when LCR=BF'h
A00A000C	LCR	8	**Line Control Register** Determines characteristics of serial communication signals.
A00A0010	MCR	8	**Modem Control Register** Controls interface signals of the UART. MCR[5:0] are modified when LCR != 8'hBF, MCR[7] can be read when LCR != 8'hBF & EFR[4] = 1.
A00A0010	XON1	8	**XON1 Char Register** Note: XON1 is modified only when LCR=BF'h.
A00A0014	LSR	8	**Line Status Register** Modified when LCR != BFh.
A00A0018	XOFF1	8	**XOFF1 Char Register** *Note: XOFF1 is modified only when LCR=BF'h.
A00A001C	SCR	8	**Scratch Register** A general purpose read/write register. After reset, its value will be un-defined. Modified when LCR != BFh.
A00A0020	AUTOBAUD_EN	8	**Auto Baud Detect Enable Register**
A00A0024	HIGHSPEED	8	**High Speed Mode Register**
A00A0028	SAMPLE_COUNT	8	**Sample Counter Register** When HIGHSPEED=3, sample_count will be the threshold value for UART sample counter (sample_num). Count from 0 to sample_count.
A00A002C	SAMPLE_POINT	8	**Sample Point Register** When HIGHSPEED=3, UART gets the input data when sample_count=sample_num, e.g. system clock = 13MHz, 921600 = 13000000/14. Therefore, sample_count = 13, and sample point = 6 (sampling the central point to decrease the inaccuracy) SAMPLE_POINT is usually (SAMPLE_COUNT-1)/2 without decimal.
A00A0030	AUTOBAUD_REG	8	**Auto Baud Monitor Register** the autobaud detection state ,it will not change until enable the autobaud_en again.
A00A0034	RATEFIX_AD	8	**Clock Rate Fix Register**
A00A0038	AUTOBAUDSAMPLE	8	**Auto Baud Sample Register** Since the system clock may change, autobaud sample duration should change as the system clock changes. When system clock = 13MHz, autobaudsample = 6; when system clock = 26MHz, autobaudsample = 13. When system clock = 52MHz, autobaudsample = 27.
A00A003C	GUARD	8	**Guard Time Added Register**
A00A0040	ESCAPE_DAT	8	**Escape Character Register**
A00A0044	ESCAPE_EN	8	**Escape Enable Register**
A00A0048	SLEEP_EN	8	**Sleep Enable Register**

This document contains information that is proprietary to MediaTek Inc.
Unauthorized reproduction or disclosure of this information in whole or in part is strictly prohibited.
MEDIATEK CONFIDENTIAL FOR dengzhenli@far-signalmobile.com USE ONLY

Address	Name	Width	Register Function
A00A004C	DMA_EN	8	DMA Enable Register
A00A0050	RXTRI_AD	8	Rx Trigger Address
A00A0054	FRACDIV_L	8	Fractional Divider LSB Address
A00A0058	FRACDIV_M	8	Fractional Divider MSB Address
A00A005C	FCR_RD	8	FIFO Control Register

A00A0000 RBR RX Buffer Register 00

Bit	15	14	13	12	11	10	9	8	7	6	5	4	3	2	1	0
Name									RBR							
Type									RU							
Reset									0	0	0	0	0	0	0	0

Bit(s)	Name	Description
7:0	RBR	**Read-only register** The received data can be read by accessing this register. Only when LCR[7] = 0.

A00A0000 THR TX Holding Register 00

Bit	15	14	13	12	11	10	9	8	7	6	5	4	3	2	1	0
Name									THR							
Type									WO							
Reset									0	0	0	0	0	0	0	0

Bit(s)	Name	Description
7:0	THR	**TX Holding Register** Write-only register. The data to be transmitted are written to this register and sent to the PC via serial communication. Only when LCR[7] = 0.

A00A0000 DLL Divisor Latch (LS) 01

Bit	15	14	13	12	11	10	9	8	7	6	5	4	3	2	1	0
Name									DLL							
Type									RW							
Reset									0	0	0	0	0	0	0	1

Bit(s)	Name	Description
7:0	DLL	**Divisor latch low 8-bit data** *Note: Modified when LCR[7]!=0.*

A00A0004 IER Interrupt Enable Register 00

Bit	15	14	13	12	11	10	9	8	7	6	5	4	3	2	1	0
Name											XOFFI			ELSI	ETBEI	ERBFI

MEDIATEK CONFIDENTIAL
FOR dengzhenli@ farsightedmobile.com USE ONLY

This document contains information that is proprietary to MediaTek Inc.
Unauthorized reproduction or disclosure of this information in whole or in part is strictly prohibited.

Type											RW			RW	RW	RW
Reset											0			0	0	0

Bit(s)	Name	Description
5	XOFFI	**Masks an interrupt that is generated when an XOFF character is received.** *Note: This interrupt is only enabled when software flow control is enabled.* 0: Mask an interrupt that is generated when an XOFF character is received. 1: Unmask an interrupt that is generated when an XOFF character is received.
2	ELSI	**When set to1, an interrupt will be generated if BI, FE, PE or OE (LSR[4:1]) becomes set.** 0: No interrupt is generated if BI, FE, PE or OE (LSR[4:1]) becomes set. 1: An interrupt is generated if BI, FE, PE or OE (LSR[4:1]) becomes set.
1	ETBEI	**When set to 1, an interrupt will be generated if the TX holding register is empty or the contents of the TX FIFO have been reduced to its trigger level.** 0: No interrupt will be generated if the TX holding register is empty or the contents of the TX FIFO have been reduced to its trigger level. 1: An interrupt will be generated if the TX folding register is empty or the contents of the TX FIFO have been reduced to its trigger level.
0	ERBFI	**When set to 1, an interrupt will be generated if RX data are placed in RX buffer register or the RX trigger level is reached.** 0: No interrupt will be generated if RX data are placed in the RX buffer register or the RX trigger level is reached. 1: An interrupt will be generated if RX Data are placed in the RX buffer register or the RX trigger level is reached.

A00A0004 DLM Divisor Latch (MS) 00

Bit	15	14	13	12	11	10	9	8	7	6	5	4	3	2	1	0
Name									DLM							
Type									RW							
Reset									0	0	0	0	0	0	0	0

Bit(s)	Name	Description
7:0	DLM	**Divisor latch high 8-bit data** *Note: Modified when LCR[7]!=0. DLL & DLM can only be updated when DLAB(LCR[7]) is set to 1. Division by 1 will generate a BAUD signal that is constantly high. DLL & DLM setting formula is {DLH,DLL}=(system clock frequency/baud_pulse/baud_rate).* When RATE_FIX(RATEFIX_AD[0])=0, system clock frequency = 52MHz. When RATE_FIX(RATEFIX_AD[0])=1 and RATE_FIX(RATEFIX_AD[2])=0, system clock frequency = 26MHz. When RATE_FIX(RATEFIX_AD[0])=1 and RATE_FIX(RATEFIX_AD[2])=1, system clock frequency = 13MHz. For baud_pulse value, refer to HIGH_SPEED(offset=24H) register For example, when at 52MHz, default speed mode and 115200 baud rate, {DLH,DLL}=52MHz/16/115200=28.

A00A0008 IIR Interrupt Identification Register 01

Bit	15	14	13	12	11	10	9	8	7	6	5	4	3	2	1	0
Name									FIFOE		ID					
Type									RO		RU					

This document contains information that is proprietary to MediaTek Inc.
Unauthorized reproduction or disclosure of this information in whole or in part is strictly prohibited.

Reset									0	0	0	0	0	0	0	1

Bit(s)	Name	Description
7:6	FIFOE	
5:0	ID	**IIR[5:0] Priority level interrupt source** 000001 - No interrupt pending 000110 1 Line status interrupt: BI, FE, PE or OE set in LSR. (Under IER[2]=1) 001100 2 RX data time-out: Time-out on character in RX FIFO. (Under IER[0]=1) 000100 3 RX data received: RX data received or RX trigger level reached. (Under IER[0]=1) 000010 4 TX holding register empty: 000000 5 Modem status change: DCTS set in MSR. (Under IER[3]=1) TX Holding Register empty or TX FIFO trigger level reached. (Under IER[1]=1) 010000 6 Software flow control: XOFF Character received. (Under IER[5]=1) 100000 7 Hardware flow control: CTS or RTS Rising Edge. (Under IER[7]=1 or IER[6]=1) **Line status interrupt:** A RX line status interrupt (IIR[5:0] = 000110b) will be generated if ELSI (IER[2]) is set and any of BI, FE, PE or OE (LSR[4:1]) becomes set. The interrupt is cleared by reading the line status register. **RX data time-out interrupt:** When the virtual FIFO mode is disabled, RX data time-out interrupt will be generated if all of the following conditions are applied: 1. FIFO contains at least one character. 2. The most recent character is received longer than four character periods ago (including all start, parity and stop bits); 3. The most recent CPU read of the FIFO is longer than four character periods ago. The timeout timer is restarted upon receipt of a new byte from the RX shift register or upon a CPU read from the RX FIFO. The RX data time-out interrupt is enabled by setting EFRBI (IER[0]) to 1 and is cleared by reading RX FIFO. When the virtual FIFO mode is enabled, RX data time-out interrupt will be generated if all of the following conditions are applied: 1. FIFO is empty. 2. The most recent character is received longer than four character periods ago (including all start, parity and stop bits). 3. The most recent CPU read of the FIFO is longer than four character periods ago. The timeout timer is restarted upon receipt of a new byte from the RX shift register or reading DMA_EN register. The RX Data Timeout Interrupt is enabled by setting EFRBI (IER[0]) to 1 and is cleared by reading DMA_EN register. **RX data received interrupt:** A RX received interrupt (IER[5:0] = 000100b) is generated if EFRBI (IER[0]) is set and either RX data are placed in the RX buffer register or the RX trigger level is reached. The interrupt is cleared by reading the RX buffer register or the RX FIFO (if enabled). **TX holding register empty interrupt:** A TX holding register empty interrupt (IIR[5:0] = 000010b) is generated if ETRBI (IER[1]) is set and either the TX holding register is empty or the contents of the TX FIFO are reduced to its

This document contains information that is proprietary to MediaTek Inc.
Unauthorized reproduction or disclosure of this information in whole or in part is strictly prohibited.
MEDIATEK CONFIDENTIAL FOR dengzhenli@arsigmedoic.com USE ONLY

Bit(s)	Name	Description
		trigger level. The interrupt is cleared by writing to the TX holding register or TX FIFO if FIFO is enabled. **Modem status change interrupt:** A modem status change Interrupt (IIR[5:0] = 000000b) will be generated if EDSSI (IER[3]) is set and e DCTS (MSR[3:0]) becomes set. The interrupt is cleared by reading the modem status register. **Software flow control interrupt:** A software flow control interrupt (IIR[5:0] = 010000b) will be generated if the software flow control is enabled and XOFFI (IER[5]) becomes set, indicating that an XOFF character has been received. The interrupt is cleared by reading the interrupt identification register. **Hardware flow control interrupt:** A hardware flow control interrupt (IER[5:0] = 100000b) will be generated if the hardware flow control is enabled and either RTSI (IER[6]) or CTSI (IER[7]) becomes set indicating that a rising edge has been detected on either the RTS/CTS modem control line. The interrupt is cleared by reading the interrupt identification register.

A00A0008 **FCR** **FIFO Control Register** **00**

Bit	15	14	13	12	11	10	9	8	7	6	5	4	3	2	1	0
Name									RFTL1_RFTL0		TFTL1_TFTL0			CLRT	CLRR	FIFOE
Type									WO		WO			WO	WO	WO
Reset									0	0	0	0		0	0	0

Bit(s)	Name	Description
7:6	RFTL1_RFTL0	**RX FIFO trigger threshold** RX FIFO contains total 32 bytes. 0: 1 1: 6 2: 12 3: RXTRIG
5:4	TFTL1_TFTL0	**TX FIFO trigger threshold** TX FIFO contains total 32 bytes. 0: 1 1: 4 2: 8 3: 14
2	CLRT	**Control bit to clear TX FIFO** 0: No effect 1: Clear TX FIFO
1	CLRR	**Control bit to clear RX FIFO** 0: No effect 1: Clear RX FIFO
0	FIFOE	**Enables FIFO** This bit must be set to 1 for any of other bits in the registers to have any effect. 0: Disable both RX and TX FIFOs. 1: Enable both RX and TX FIFOs.

A00A0008 **EFR** **Enhanced Feature Register** **00**

This document contains information that is proprietary to MediaTek Inc.
Unauthorized reproduction or disclosure of this information in whole or in part is strictly prohibited.
MEDIATEK CONFIDENTIAL FOR dengzhenli@far-sightedmobile.com USE ONLY

Bit	15	14	13	12	11	10	9	8	7	6	5	4	3	2	1	0
Name												ENABLE_E	SW_FLOW_CONT			
Type												RW	RW			
Reset												0	0	0	0	0

Bit(s)	Name	Description
4	ENABLE_E	**Enables enhancement feature** 0: Disable 1: Enable
3:0	SW_FLOW_CONT	**Software flow control bits** 00xx: No TX flow control 01xx: No TX flow control 10xx: Transmit XON1/XOFF1 as flow control bytes xx00: No RX flow control xx01: No RX flow control xx10: Receive XON1/XOFF1 as flow control bytes

A00A000C LCR Line Control Register 00

Bit	15	14	13	12	11	10	9	8	7	6	5	4	3	2	1	0
Name									DLAB	SB	SP	EPS	PEN	STB	WLS1_WLS0	
Type									RW	RW	RW	RW	RW	RW	RW	
Reset									0	0	0	0	0	0	0	0

Bit(s)	Name	Description
7	DLAB	**Divisor latch access bit** 0: RX and TX registers are read/written at Address 0 and the IER register is read/written at Address 4. 1: Divisor Latch LS is read/written at Address 0 and the Divisor Latch MS is read/written at Address 4.
6	SB	**Set break** 0: No effect 1: SOUT signal is forced to the 0 state.
5	SP	**Stick parity** 0: No effect. 1: The parity bit is forced to a defined state, depending on the states of EPS and PEN: If EPS=1 & PEN=1, the parity bit will be set and checked = 0. If EPS=0 & PEN=1, the parity bit will be set and checked = 1.
4	EPS	**Selects even parity** 0: When EPS=0, an odd number of ones is sent and checked. 1: When EPS=1, an even number of ones is sent and checked.
3	PEN	**Enables parity** 0: The parity is neither transmitted nor checked. 1: The parity is transmitted and checked.
2	STB	**Number of STOP bits** 0: One STOP bit is always added. 1: Two STOP bits are added after each character is sent; unless the character length is 5 when 1 STOP bit is added.
1:0	WLS1_WLS0	**Selects word length** 0: 5 bits 1: 6 bits 2: 7 bits

This document contains information that is proprietary to MediaTek Inc.
Unauthorized reproduction or disclosure of this information in whole or in part is strictly prohibited.
MEDIATEK CONFIDENTIAL FOR dengzhenli@ari-sh-tecmobile.com USE ONLY

Bit(s)	Name	Description
		3: 8 bits

A00A0010 MCR Modem Control Register 00

Bit	15	14	13	12	11	10	9	8	7	6	5	4	3	2	1	0
Name									**XOFF_STATUS**			**Loop**			**RTS**	
Type									RU			RW			RW	
Reset									0			0			0	

Bit(s)	Name	Description
7	XOFF_STATUS	**Read-only bit** 0: When an XON character is received. 1: When an XOFF character is received.
4	Loop	**Loop-back control bit** 0: No loop-back is enabled. 1: Loop-back mode is enabled.
1	RTS	**Controls the state of the output NRTS, even in loop mode.** 0: RTS will always output 1. 1: RTS's output will be controlled by flow control condition.

A00A0010 XON1 XON1 Char Register 00

Bit	15	14	13	12	11	10	9	8	7	6	5	4	3	2	1	0
Name									**XON1**							
Type									RW							
Reset									0	0	0	0	0	0	0	0

Bit(s)	Name	Description
7:0	XON1	**XON1 character for software flow control** Modified only when LCR=BF'h.

A00A0014 LSR Line Status Register 60

Bit	15	14	13	12	11	10	9	8	7	6	5	4	3	2	1	0
Name									**FIFOERR**	**TEMT**	**THRE**	**BI**	**FE**	**PE**	**OE**	**DR**
Type									RU	RU	RU	RU	RU	RU	RU	RU
Reset									0	1	1	0	0	0	0	0

Bit(s)	Name	Description
7	FIFOERR	**RX FIFO error indicator** 0: No PE, FE, BI set in the RX FIFO. 1: Set to 1 when there is at least one PE, FE or BI in the RX FIFO.
6	TEMT	**TX holding register (or TX FIFO) and the TX shift register are empty.** 0: Empty conditions below are not met. 1: If FIFOs are enabled, the bit will be set whenever the TX FIFO and the TX shift register are empty. If FIFOs are disabled, the bit will be set whenever TX

This document contains information that is proprietary to MediaTek Inc.
Unauthorized reproduction or disclosure of this information in whole or in part is strictly prohibited.
MEDIATEK CONFIDENTIAL FOR dengzhenli@fair-sightedmobile.com USE ONLY

Bit(s)	Name	Description
		holding register and TX shift register are empty.
5	THRE	**Indicates if there is room for TX holding register or TX FIFO is reduced to its trigger level** 0: Reset whenever the contents of the TX FIFO are more than its trigger level (FIFOs are enabled), or whenever TX holding register is not empty (FIFOs are disabled). 1: Set whenever the contents of the TX FIFO are reduced to its trigger level (FIFOs are enabled), or whenever TX holding register is empty and ready to accept new data (FIFOs are disabled).
4	BI	**Break interrupt** 0: Reset by the CPU reading this register 1: If the FIFOs are disabled, this bit will be set whenever the SIN is held in the 0 state for more than one transmission time (START bit + DATA bits + PARITY + STOP bits). If the FIFOs are enabled, this error will be associated with a corresponding character in the FIFO and is flagged when this byte is at the top of the FIFO. When a break occurs, only one zero character is loaded into the FIFO: The next character transfer is enabled when SIN goes into the marking state and receives the next valid start bit.
3	FE	**Framing error** 0: Reset by the CPU reading this register 1: If the FIFOs are disabled, this bit will be set if the received data do not have a valid STOP bit. If the FIFOs are enabled, the state of this bit will be revealed when the byte it refers to is the next to be read.
2	PE	**Parity error** 0: Reset by the CPU reading this register 1: If the FIFOs are disabled, this bit will be set if the received data do not have a valid parity bit. If the FIFOs are enabled, the state of this bit will be revealed when the referred byte is the next to be read.
1	OE	**Overrun error** 0: Reset by the CPU reading this register. 1: If the FIFOs are disabled, this bit will be set if the RX buffer is not read by the CPU before the new data from the RX shift register overwrites the previous contents. If the FIFOs are enabled, an overrun error will occur when the RX FIFO is full and the RX shift register becomes full. OE will be set as soon as this happens. The character in the shift register is then overwritten, but not transferred to the FIFO.
0	DR	**Data ready** 0: Cleared by the CPU reading the RX buffer or by reading all the FIFO bytes. 1: Set by the RX buffer becoming full or by the FIFO becoming no empty.

A00A0018 XOFF1 XOFF1 Char Register 00

Bit	15	14	13	12	11	10	9	8	7	6	5	4	3	2	1	0
Name									XOFF1							
Type									RW							
Reset									0	0	0	0	0	0	0	0

Bit(s)	Name	Description
7:0	XOFF1	**XOFF1 character for software flow control** Modified only when LCR=BF'h.

This document contains information that is proprietary to MediaTek Inc.
Unauthorized reproduction or disclosure of this information in whole or in part is strictly prohibited.
MEDIATEK CONFIDENTIAL FOR dengzhenli@fat-sigmobile.com USE ONLY

A00A001C SCR Scratch Register 00

Bit	15	14	13	12	11	10	9	8	7	6	5	4	3	2	1	0
Name									SCR							
Type									RW							
Reset									0	0	0	0	0	0	0	0

Bit(s)	Name	Description
7:0	SCR	**General purpose read/write register** After reset, its value will be undefined. Modified when LCR != BFh.

A00A0020 AUTOBAUD_EN Auto Baud Detect Enable Register 00

Bit	15	14	13	12	11	10	9	8	7	6	5	4	3	2	1	0
Name														SLEEP_ACK_SEL	AUTOBAUD_SEL	AUTOBAUD_EN
Type														RW	RW	RW
Reset														0	0	0

Bit(s)	Name	Description
2	SLEEP_ACK_SEL	**Selects sleep ack when autobaud_en** 0: Support sleep_ack when autobaud_en is opened . 1: Does not support sleep_ack when autobaud_en is opened .
1	AUTOBAUD_SEL	**Selects auto-baud** 0: Support standard baud rate detection 1: Support non_standard baud rate detection (support baud from 110 to 115200; recommended to use 52MHz to auto fix) .
0	AUTOBAUD_EN	**Auto-baud enabling signal** 0: Disable auto-baud function 1: Enable auto-baud function (UARTn+0024h SPEED should be set to 0.) *Note: When AUTOBAUD_EN is active, there should not be A*/a* char before the auto baud char AT/at. If A*/a* is Inevitable, autobaud will fail and please disable AUTOBAUD_EN to reset the autobaud feature and autobaud_en again.*

A00A0024 HIGHSPEED High Speed Mode Register 00

Bit	15	14	13	12	11	10	9	8	7	6	5	4	3	2	1	0
Name															SPEED	
Type															RW	
Reset															0	0

Bit(s)	Name	Description
1:0	SPEED	**UART sample counter base** 0: Based on 16*baud_pulse, baud_rate = system clock frequency/16/{DLH, DLL} 1: Based on 8*baud_pulse, baud_rate = system clock frequency/8/{DLH, DLL} 2: Based on 4*baud_pulse, baud_rate = system clock frequency/4/{DLH, DLL} 3: Based on sampe_count * baud_pulse, baud_rate = system clock frequency / (sampe_count+1)/{DLM, DLL}

This document contains information that is proprietary to MediaTek Inc.
Unauthorized reproduction or disclosure of this information in whole or in part is strictly prohibited.

MEDIATEK CONFIDENTIAL FOR dengzhenli@ farsightemobile.com USE ONLY

A00A0028 **SAMPLE_COUNT** **Sample Counter Register** **00**

Bit	15	14	13	12	11	10	9	8	7	6	5	4	3	2	1	0
Name									SAMPLECOUNT							
Type									RW							
Reset									0	0	0	0	0	0	0	0

Bit(s)	Name	Description
7:0	SAMPLECOUNT	Only useful when HIGHSPEED mode = 3.

A00A002C **SAMPLE_POINT** **Sample Point Register** **FF**

Bit	15	14	13	12	11	10	9	8	7	6	5	4	3	2	1	0
Name									SAMPLEPOINT							
Type									RW							
Reset									1	1	1	1	1	1	1	1

Bit(s)	Name	Description
7:0	SAMPLEPOINT	SAMPLE_POINT is usually (SAMPLE_COUNT-1)/2 without decimal. Effective only when HIGHSPEED=3.

A00A0030 **AUTOBAUD_REG** **Auto Baud Monitor Register** **00**

Bit	15	14	13	12	11	10	9	8	7	6	5	4	3	2	1	0
Name									BAUD_STAT				BAUD_RATE			
Type									RU				RU			
Reset									0	0	0	0	0	0	0	0

Bit(s)	Name	Description
7:4	BAUD_STAT	**Autobaud state (only true value in standard autobaud detection)** 0: Autobaud is detecting. 1: AT_7N1 2: AT_7O1 3: AT_7E1 4: AT_8N1 5: AT_8O1 6: AT_8E1 7: at_7N1 8: at_7E1 9: at_7O1 10: at_8N1 11: at_8E1 12: at_8O1 13: Autobaud detection fails
3:0	BAUD_RATE	**Autobaud baud rate (only true value in standard autobaud detection)** 0: 115,200 1: 57,600 2: 38,400 3: 19,200 4: 9,600

This document contains information that is proprietary to MediaTek Inc.
Unauthorized reproduction or disclosure of this information in whole or in part is strictly prohibited.
MEDIATEK CONFIDENTIAL FOR dengzhenli@fat-sightedmobile.com USE ONLY

Bit(s)	Name	Description
		5: 4,800 6: 2,400 7: 1,200 8: 300 9: 110

A00A0034 RATEFIX_AD Clock Rate Fix Register 00

Bit	15	14	13	12	11	10	9	8	7	6	5	4	3	2	1	0
Name														FREQ_SEL	AUTOBAUD_RATE_FIX	RATE_FIX
Type														RW	RW	RW
Reset														0	0	0

Bit(s)	Name	Description
2	FREQ_SEL	0: Select 26MHz as system clock 1: Select 13MHz as system clock
1	AUTOBAUD_RATE_FIX	0: Use 52MHz as system clock for UART auto baud detection 1: Use 26MHz/13MHz (depending on FREQ_SEL) as system clock for UART auto baud detection
0	RATE_FIX	0: Use 52MHz as system clock for UART TX/RX 1: Use 26MHz/13MHz (depending on FREQ_SEL) as system clock for UART TX/RX

A00A0038 AUTOBAUDSAMPLE Auto Baud Sample Register 0D

Bit	15	14	13	12	11	10	9	8	7	6	5	4	3	2	1	0
Name											AUTOBAUDSAMPLE					
Type											RW					
Reset											0	0	1	1	0	1

Bit(s)	Name	Description
5:0	AUTOBAUDSAMPLE	**clk diveision for autobaud rate detection** For standard baud rate detection. System clk 52m: 'd 27 System clk 26m: 'd 13 System clk 13m: 'd 6 For non-standard baud rate detection. :15.

A00A003C GUARD Guard Time Added Register 0F

Bit	15	14	13	12	11	10	9	8	7	6	5	4	3	2	1	0
Name												GUARD_EN	GUARD_CNT			
Type												RW	RW			
Reset												0	1	1	1	1

MEDIATEK CONFIDENTIAL FOR dengzhenli@far-sightedmobile.com USE ONLY

This document contains information that is proprietary to MediaTek Inc.
Unauthorized reproduction or disclosure of this information in whole or in part is strictly prohibited.

Bit(s)	Name	Description
4	GUARD_EN	**Guard interval add enabling signal** 0: No guard interval added 1: Add guard interval after stop bit.
3:0	GUARD_CNT	**Guard interval count value** Guard interval = [1/(system clock/div_step/div)]*GUARD_CNT.

A00A0040 ESCAPE_DAT Escape Character Register FF

Bit	15	14	13	12	11	10	9	8	7	6	5	4	3	2	1	0
Name									ESCAPE_DAT							
Type									RW							
Reset									1	1	1	1	1	1	1	1

Bit(s)	Name	Description
7:0	ESCAPE_DAT	**Escape character added before software flow control data and escape character** If TX data are xon (31h), with esc_en =1, UART will transmit data as esc + CEh (~xon).

A00A0044 ESCAPE_EN Escape Enable Register 00

Bit	15	14	13	12	11	10	9	8	7	6	5	4	3	2	1	0
Name																ESC_EN
Type																RW
Reset																0

Bit(s)	Name	Description
0	ESC_EN	**Adds escape character in transmitter and removes escape character in receiver by UART** 0: Does not deal with the escape character 1: Add escape character in transmitter and remove escape character in receiver

A00A0048 SLEEP_EN Sleep Enable Register 00

Bit	15	14	13	12	11	10	9	8	7	6	5	4	3	2	1	0
Name																SLEEP_EN
Type																RW
Reset																0

Bit(s)	Name	Description
0	SLEEP_EN	**For sleep mode issue** 0: Does not deal with sleep mode indicate signal 1: Activate hardware flow control or software control according to software initial setting when the chip enters sleep mode. Release hardware flow when the chip wakes up. However, for software control, UART sends xon when awaken and when FIFO does not reach threshold level.

This document contains information that is proprietary to MediaTek Inc.
Unauthorized reproduction or disclosure of this information in whole or in part is strictly prohibited.
MEDIATEK CONFIDENTIAL FOR dengzhenli@fareastmobile.com USE ONLY

A00A004C DMA_EN DMA Enable Register 00

Bit	15	14	13	12	11	10	9	8	7	6	5	4	3	2	1	0
Name													FIFO_lsr_sel	TO_CNT_AUTORST	TX_DMA_EN	RX_DMA_EN
Type													RW	RW	RW	RW
Reset													0	0	0	0

Bit(s)	Name	Description
3	FIFO_lsr_sel	**Selects FIFO LSR mode** 0: LSR will hold the first line status error state until you read the LSR register. 1: LSR will update automatically.
2	TO_CNT_AUTORST	**Time-out counter auto reset register** 0: After RX time-out happens, SW shall reset the interrupt by reading UART 0x4C. 1: The time-out counter will be auto reset. Set this register when Rain's new DMA is used.
1	TX_DMA_EN	**TX_DMA mechanism enabling signal** 0: Does not use DMA in TX 1: Use DMA in TX. When this register is enabled, the flow control will be based on the DMA threshold and generate a time-out interrupt for DMA.for DMA.
0	RX_DMA_EN	**RX_DMA mechanism enabling signal** 0: Does not use DMA in RX 1: Use DMA in RX. When this register is enabled, the flow control will be based on the DMA threshold and generate a time-out interrupt

A00A0050 RXTRI_AD Rx Trigger Address 00

Bit	15	14	13	12	11	10	9	8	7	6	5	4	3	2	1	0
Name													RXTRIG			
Type													RW			
Reset													0	0	0	0

Bit(s)	Name	Description
3:0	RXTRIG	When {rtm,rtl}=2'b11, the RX FIFO threshold will be Rxtrig. The value is suggested to be smaller than half of RX FIFO size, which is 32 bytes.

A00A0054 FRACDIV_L Fractional Divider LSB Address 00

Bit	15	14	13	12	11	10	9	8	7	6	5	4	3	2	1	0
Name									FRACDIV_L							
Type									RW							
Reset									0	0	0	0	0	0	0	0

Bit(s)	Name	Description
7:0	FRACDIV_L	Adds sampling count (+1) from state data7 to data0 to contribute fractional divisor.only when high_speed=3.

This document contains information that is proprietary to MediaTek Inc.
Unauthorized reproduction or disclosure of this information in whole or in part is strictly prohibited.
MEDIATEK CONFIDENTIAL FOR dengzhenli@far-sightedmobile.com USE ONLY

A00A0058 FRACDIV_M Fractional Divider MSB Address 00

Bit	15	14	13	12	11	10	9	8	7	6	5	4	3	2	1	0
Name															FRACDIV_M	
Type															RW	
Reset															0	0

Bit(s)	Name	Description
1:0	FRACDIV_M	Adds sampling count when in state stop to parity to contribute fractional divisor.only when high_speed=3.

A00A005C FCR_RD FIFO Control Register 00

Bit	15	14	13	12	11	10	9	8	7	6	5	4	3	2	1	0
Name									RFTL1_RFTL0		TFTL1_TFTL0			CLRT	CLRR	FIFOE
Type									RO		RO			RO	RO	RO
Reset									0	0	0	0		0	0	0

Bit(s)	Name	Description
7:6	RFTL1_RFTL0	**RX FIFO trigger threshold** RX FIFO contains total 32 bytes. 0: 1 1: 6 2: 12 3: RXTRIG
5:4	TFTL1_TFTL0	**TX FIFO trigger threshold** TX FIFO contains total 32 bytes. 0: 1 1: 4 2: 8 3: 14
2	CLRT	0: TX FIFO is not cleared. 1: TX FIFO is cleared.
1	CLRR	0: RX FIFO is not cleared. 1: RX FIFO is cleared.
0	FIFOE	**Enables FIFO** This bit must be set to 1 for any of other bits in the registers to have any effect. 0: RX and TX FIFOs are not enabled. 1: RX and TX FIFOs are enabled.

3.10 I2C/SCCB Controller

3.10.1 General Description

I2C (Inter-IC)/SCCB (Serial Camera Control Bus) is a two-wire serial interface. The two signals are SCL and SDA. SCL is a clock signal that is driven by the master. SDA is a bi-directional data signal that can be driven by either the master or the slave. This generic controller supports the master role and conforms to the I2C specification.

This document contains information that is proprietary to MediaTek Inc.
Unauthorized reproduction or disclosure of this information in whole or in part is strictly prohibited.
MEDIATEK CONFIDENTIAL FOR dengzheli@far-sightedmobile.com USE ONLY

3.10.1.1 Feature

- I2C compliant master mode operation
- Adjustable clock speed for LS/FS mode operation
- Supports 7-bit/10-bit addressing
- Supports high-speed mode
- Supports slave clock extension
- START/STOP/REPEATED START condition
- Manual transfer mode
- Multi-write per transfer (up to 8 data bytes for non-DMA mode)
- Multi-read per transfer (up to 8 data bytes for non-DMA mode)
- Multi-transfer per transaction
- Combined format transfer with length change capability
- Active drive/wired-and I/O configuration

3.10.1.2 Manual Transfer Mode

The controller offers one transfer mode, the manual mode.

When the manual mode is selected, in addition to the slave address register, the controller has a built-in 8byte deep FIFO which allows MCU to prepare up to 8 bytes of data for a write transfer, or read up to 8 bytes of data for a read transfer.

3.10.1.3 Transfer Format Support

This controller has been designed to be as generic as possible in order to support a wide range of devices that may utilize different combinations of transfer formats. Here are the transfer format types that can be supported through different software configuration:

Wording convention note

- Transfer = Anything encapsulated within a Start and Stop or Repeated Start.
- Transfer length = Number of bytes within the transfer
- Transaction = This is the top unit. Everything combined equals 1 transaction.
- Transaction length = Number of transfers to be conducted.

Master to slave dir

Slave to master dir

Single-byte access

MEDIATEK CONFIDENTIAL FOR dengzhenli@farsightedmobile.com USE ONLY

This document contains information that is proprietary to MediaTek Inc.
Unauthorized reproduction or disclosure of this information in whole or in part is strictly prohibited.

Single Byte Write

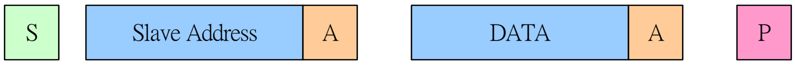

Single Byte Read

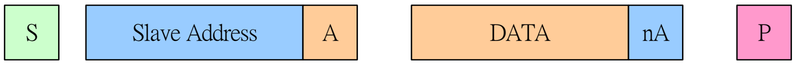

Multi-byte access

Multi Byte Write

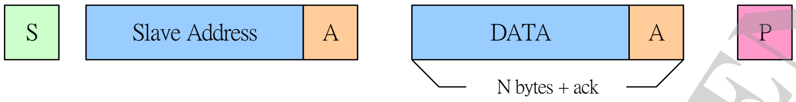

Multi Byte Read

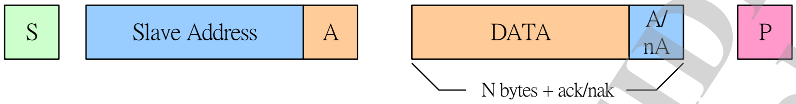

Multi-byte transfer + multi-transfer (same direction)

Multi Byte Write + Multi Transfer

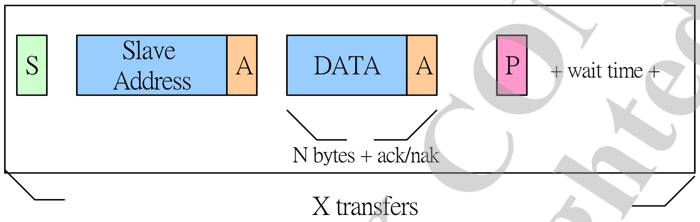

Multi Byte Read + Multi Transfer

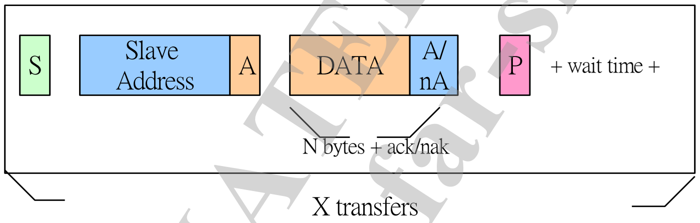

Multi-byte transfer + multi-transfer w RS (same direction)

MEDIATEK CONFIDENTIAL
FOR dengzhenli@ farsightedmobile.com USE ONLY

This document contains information that is proprietary to MediaTek Inc.
Unauthorized reproduction or disclosure of this information in whole or in part is strictly prohibited.

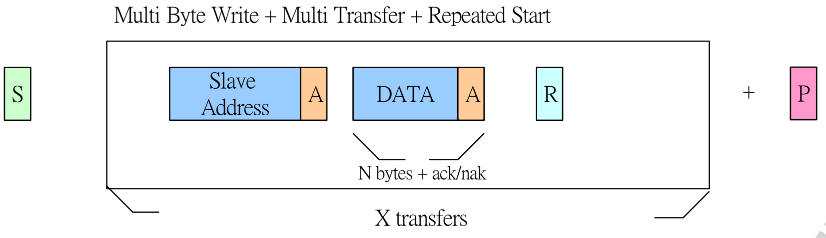

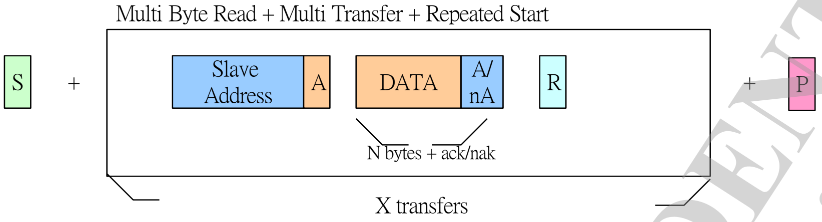

Combined write/read with Repeated Start (direction change)

Note: Only supports write and then read sequence. Read and then write is not supported.

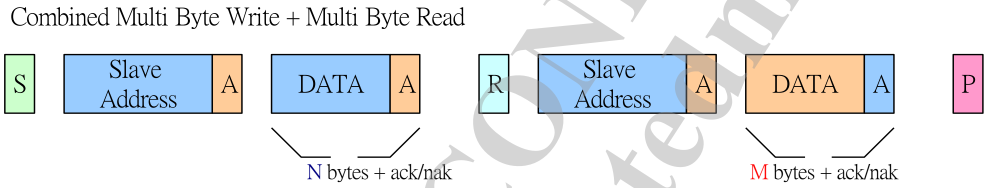

3.10.2 Programming Examples

Common transfer programmable parameters

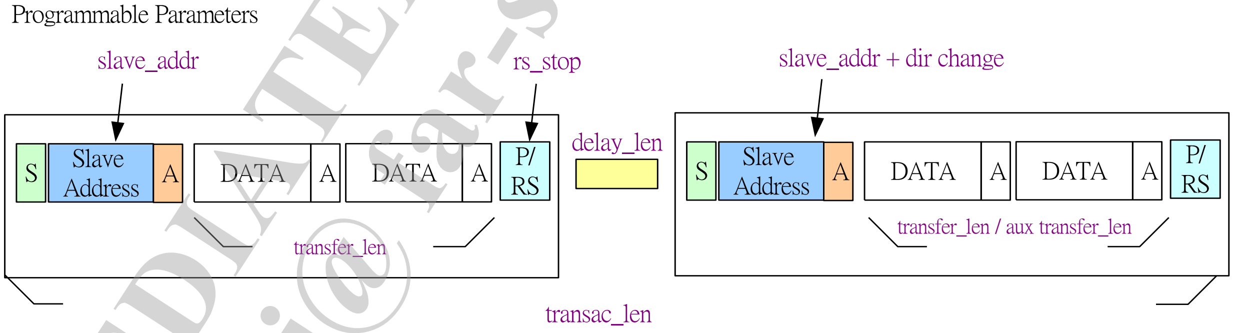

Output waveform timing programmable parameters

MEDIATEK CONFIDENTIAL FOR dengzhenli@far-sightedmobile.com USE ONLY

This document contains information that is proprietary to MediaTek Inc.
Unauthorized reproduction or disclosure of this information in whole or in part is strictly prohibited.

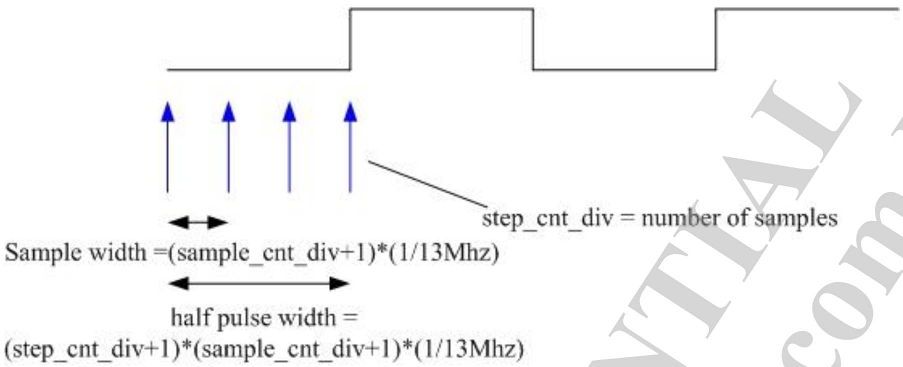

3.10.3 Register Definition

Module name: I2C_SCCB_Controller base address: (+A0120000h)

Address	Name	Width	Register function
A0120000	**DATA_PORT**	16	Data port register
A0120004	**SLAVE_ADDR**	16	Slave address register
A0120008	**INTR_MASK**	16	**Interrupt mask register** This register provides masks for the corresponding interrupt sources as indicated in the intr_stat register. 1 = Allow interrupt 0 = Disable interrupt *Note: While disabled, the corresponding interrupt will not be asserted, however intr_stat will still be updated with the status, i.e. mask does not affect intr_stat register values.*
A012000C	**INTR_STAT**	16	**Interrupt status register** When an interrupt is issued by the I2C controller, this register will need to be read by MCU to determine the cause for the interrupt. After this status has been read and appropriate actions are taken, the corresponding interrupt source will need to be written 1 to clear.
A0120010	**CONTROL**	16	Control register
A0120014	**TRANSFER_LEN**	16	Transfer length register (number of bytes per transfer)
A0120018	**TRANSAC_LEN**	16	Transaction length register (number of transfers per transaction)
A012001C	**DELAY_LEN**	16	Inter delay length register
A0120020	**TIMING**	16	**Timing control register** LS/FS only. This register is used to control the output waveform timing. Each half pulse width, i.e. each high or low pulse, is equal to (step_cnt_div+1)*(sample_cnt_div + 1)/13MHz
A0120024	**START**	16	Start register
A0120030	**FIFO_STAT**	16	FIFO status register

This document contains information that is proprietary to MediaTek Inc.
Unauthorized reproduction or disclosure of this information in whole or in part is strictly prohibited.
MEDIATEK CONFIDENTIAL FOR dengzhenli@far-sightedmobile.com USE ONLY

Address	Name	Width	Register function
A0120038	FIFO_ADDR_CLR	16	FIFO address clear register
A0120040	IO_CONFIG	16	**IO config register** This register is used to configure the I/O for the SDA and SCL lines to select between normal I/O mode, or open-drain mode to support wired-and bus.
A0120048	HS	16	**High speed mode register** This register contains options for supporting high speed operation features. Each HS half pulse width, i.e. each high or low pulse, is equal to (step_cnt_div+1)*(sample_cnt_div + 1)/13MHz
A0120050	SOFTRESET	16	Soft reset register
A0120060	SPARE	16	SPARE
A0120064	DEBUGSTAT	16	Debug status register
A0120068	DEBUGCTRL	16	Debug control register
A012006C	TRANSFER_LEN_AUX	16	Transfer length register (number of bytes per transfer)
A0120074	TIMEOUT	16	Timeout timing register

A0120000 DATA_PORT Data Port Register 0000

Bit	15	14	13	12	11	10	9	8	7	6	5	4	3	2	1	0
Name									DATA_PORT							
Type									RW							
Reset									0	0	0	0	0	0	0	0

Bit(s)	Mnemonic	Name	Description
7:0	DATA_PORT	DATA_PORT	**FIFO access port** During master write sequences (slave_addr[0] = 0), this port can be written by APB, and during master read sequences (slave_addr[0] = 1), this port can be read by APB. *Note: Slave_addr must be set correctly before accessing FIFO.* For debugging only: If the fifo_apb_debug bit is set, FIFO can be read and written by the APB.

A0120004 SLAVE_ADDR Slave Address Register 00BF

Bit	15	14	13	12	11	10	9	8	7	6	5	4	3	2	1	0
Name									SLAVE_ADDR							
Type									RW							
Reset									1	0	1	1	1	1	1	1

Bit(s)	Mnemonic	Name	Description
7:0	SLAVE_ADDR	SLAVE_ADDR	**Specifies the slave address of the device to be accessed** Bit 0 is defined by the I2C protocol as a bit that indicates the direction of transfer.

This document contains information that is proprietary to MediaTek Inc.
Unauthorized reproduction or disclosure of this information in whole or in part is strictly prohibited.
MEDIATEK CONFIDENTIAL FOR dengzhenli@ farsightedmobile.com USE ONLY

Bit(s)	Mnemonic	Name	Description
			0: Master write 1: Master read

A0120008 **INTR_MASK** **Interrupt Mask Register** **0000**

Bit	15	14	13	12	11	10	9	8	7	6	5	4	3	2	1	0
Name												MASK_TIMEOUT		MASK_HS_NACKERR	MASK_ACKERR	MASK_TRANSAC_COMP
Type												RW		RW	RW	RW
Reset												0		0	0	0

Overview: This register provides masks for the corresponding interrupt sources as indicated in the intr_stat register. 1 = allow interrupt; 0 = disable interrupt Note that while disabled, the corresponding interrupt will not be asserted. However, intr_stat will still be updated with the status, i.e. mask does not affect intr_stat register values.

Bit(s)	Mnemonic	Name	Description
4	**MASK_TIMEOUT**	MASK_TIMEOUT	Setting this value to 0 will mask TIMEOUT interrupt signal.
2	**MASK_HS_NACKERR**	MASK_HS_NACKERR	Setting this value to 0 will mask HS_NACKERR interrupt signal.
1	**MASK_ACKERR**	MASK_ACKERR	Setting this value to 0 will mask ACK_ERR interrupt signal.
0	**MASK_TRANSAC_COMP**	MASK_TRANSAC_COMP	Setting this value to 0 will mask TRANSAC_COMP interrupt signal.

A012000C **INTR_STAT** **Interrupt Status Register** **0000**

Bit	15	14	13	12	11	10	9	8	7	6	5	4	3	2	1	0
Name												TIMEOUT	ARB_LOST	HS_NACKERR	ACKERR	TRANSAC_COMP
Type												W1C	W1C	W1C	W1C	W1C
Reset												0	0	0	0	0

Overview: When an interrupt is issued by the I2C controller, this register will need to be read by MCU to determine the cause for the interrupt. After this status has been read and appropriate actions are taken, the corresponding interrupt source will need to be written 1 to clear.

Bit(s)	Mnemonic	Name	Description
4	**TIMEOUT**	TIMEOUT_IRQ	This status is asserted if time-out is enabled and the timer expires. The internal master state machine will stop, and MCU will need to manually clear the state machine by either issuing software reset by disabling the transact_en bit. Time-out can be used to detect PCB or I2C malfunction.
3	**ARB_LOST**	SPARE	**Reserved**
2	**HS_NACKE**	HS_NACKERR	This status is asserted if HS master code NACK error detection is

This document contains information that is proprietary to MediaTek Inc.
Unauthorized reproduction or disclosure of this information in whole or in part is strictly prohibited.

MEDIATEK CONFIDENTIAL FOR dengzhenli@far-sightedmobile.com USE ONLY

Bit(s)	Mnemonic	Name	Description
	RR		enabled. If enabled, HS master code NACK err will cause transaction to end, and stop will be issued.
1	**ACKERR**	ACKERR	This status is asserted if ACK error detection is enabled. If enabled, ACKERR will cause transaction to end, and stop will be issued.
0	**TRANSAC_COMP**	TRANSAC_COMP	This status is asserted when a transaction is completed successfully.

A0120010 **CONTROL** **Control Register** **0000**

Bit	15	14	13	12	11	10	9	8	7	6	5	4	3	2	1	0
Name								**TIMEOUT_EN**	**RESET_BUSY_EN**	**TRANSFER_LEN_CHANGE**	**ACKERR_DET_EN**	**DIR_CHANGE**	**CLK_EXT_EN**		**RS_STOP**	
Type								RW	RW	RW	RW	RW	RW		RW	
Reset								0	0	0	0	0	0		0	

Bit(s)	Mnemonic	Name	Description
8	**TIMEOUT_EN**	TIMEOUT_EN	**Enables time-out mechanism** When enabled, if SCL stays at 0 for too long period of time due to I2C slave holds SCL at 0 for too long or SCL stucks at 0 due to PCB issue, the master shall terminate the transaction, stop the internal state machine and assert time-out interrupt. MCU shall handle this case appropriately and reset the master and FIFO address before reissuing the transaction again. If this option is disabled, the HW timer will not count and nor expire forever. 0: Disable 1: Enable
7	**RESET_BUSY_EN**	SPARE	**Reserved**
6	**TRANSFER_LEN_CHANGE**	TRANSFER_LEN_CHANGE	**Specifies whether or not to change the transfer length after the fist transfer is completed** If enabled, the transfers after the first transfer will use the transfer_len_aux parameter. 0: Disable 1: Enable
5	**ACKERR_DET_EN**	ACKERR_DET_EN	**Enables slave ACK error detection** When enabled, if slave ACK error is detected, the master shall terminate the transaction by issuing a STOP condition and then assert the ACKERR interrupt. MCU handles this case appropriately then resets the FIFO address before reissuing transaction. If this option is disabled, the controller will ignore slave ACK error and keep on scheduled transaction. 0: Disable 1: Enable
4	**DIR_CHANGE**	DIR_CHANGE	**Combined transfer format, where the direction of transfer is to be changed from write to read after the FIRST RS condition** *Note: When set to 1, the transfers after the direction change will be based on the transfer_len_aux parameter.* 0: Disable 1: Enable
3	**CLK_EXT_EN**	CLK_EXT_EN	**I2C spec allows slaves to hold the SCL line low if it is not yet**

MEDIATEK CONFIDENTIAL FOR dengzhenli@farsightmobile.com USE ONLY

This document contains information that is proprietary to MediaTek Inc.
Unauthorized reproduction or disclosure of this information in whole or in part is strictly prohibited.

Bit(s)	Mnemonic	Name	Description
	N		**ready for further processing** Therefore, if this bit is set to 1, the master controller will enter a high wait state until the slave releases the SCL line.
1	**RS_STOP**	RS_STOP	**In LS/FS mode, this bit affects multi-transfer transaction only.** It controls whether or not the REPEATED-START condition is used between transfers. The last ending transfer always ends with a STOP. In HS mode, this bit must be set to 1. 0: Use STOP 1: Use REPEATED-START

A0120014 TRANSFER_LEN Transfer Length Register (Number of Bytes per Transfer) 0001

Bit	15	14	13	12	11	10	9	8	7	6	5	4	3	2	1	0
Name													TRANSFER_LEN_AUX			
Type													RW			
Reset													0	0	0	1

Bit(s)	Mnemonic	Name	Description
3:0	**TRANSFER_LEN_AUX**	TRANSFER_LEN	**Indicates the number of data bytes to be transferred in 1 transfer unit (excluding slave address byte)** *Note: The value must be set to be bigger than 1; otherwise no transfer will take place.*

A0120018 TRANSAC_LEN Transaction Length Register (Number of Transfers per Transaction) 0001

Bit	15	14	13	12	11	10	9	8	7	6	5	4	3	2	1	0
Name									TRANSAC_LEN							
Type									RW							
Reset									0	0	0	0	0	0	0	1

Bit(s)	Mnemonic	Name	Description
7:0	**TRANSAC_LEN**	TRANSAC_LEN	**Indicates the number of transfers to be transferred in 1 transaction** *Note: The value must be set to be bigger than 1; otherwise no transfer will take place.*

A012001C DELAY_LEN Inter Delay Length Register 0002

Bit	15	14	13	12	11	10	9	8	7	6	5	4	3	2	1	0
Name									DELAY_LEN							
Type									RW							
Reset									0	0	0	0	0	0	1	0

Bit(s)	Mnemonic	Name	Description
7:0	**DELAY_LEN**	DELAY_LEN	**Sets up wait delay between consecutive transfers when RS_STOP bit is set to 0** Unit: Half the pulse width

This document contains information that is proprietary to MediaTek Inc.
Unauthorized reproduction or disclosure of this information in whole or in part is strictly prohibited.
FOR dengzhenli@far-sightedmobile.com USE ONLY MEDIATEK CONFIDENTIAL

A0120020 TIMING Timing Control Register 1303

Bit	15	14	13	12	11	10	9	8	7	6	5	4	3	2	1	0
Name	DATA_READ_ADJ	DATA_READ_TIME				SAMPLE_CNT_DIV					STEP_CNT_DIV					
Type	RW	RW				RW					RW					
Reset	0	0	0	1		0	1	1			0	0	0	0	1	1

Overview: LS/FS only. This register is used to control the output waveform timing. Each half pulse width, i.e. each high or low pulse, is equal to (step_cnt_div+1)*(sample_cnt_div + 1)/13MHz

Bit(s)	Mnemonic	Name	Description
15	**DATA_READ_ADJ**	DATA_READ_ADJ	When set to 1, data latch in sampling time during master reads are adjusted according to the DATA_READ_TIME value. Otherwise, by default, the data are latched in at half of the high pulse width point. This value must be set to be smaller than or equal to half the high pulse width.
14:12	**DATA_READ_TIME**	DATA_READ_TIME	This value is valid only when DATA_READ_ADJ is set to 1. This can be used to adjust so that the data are latched in at earlier sampling points (assuming data are settled by then).
10:8	**SAMPLE_CNT_DIV**	SAMPLE_CNT_DIV	Used for LS/FS only. This adjusts the width of each sample. Sample width = (sample_cnt_div +1)/13MHz
5:0	**STEP_CNT_DIV**	STEP_CNT_DIV	Specifies the number of samples per half pulse width, i.e. each high or low pulse

A0120024 START Start Register 0000

Bit	15	14	13	12	11	10	9	8	7	6	5	4	3	2	1	0
Name																START
Type																RW
Reset																0

Bit(s)	Mnemonic	Name	Description
0	**START**	START	**Starts the transaction on the bus** It is auto de-asserted at the end of the transaction.

A0120030 FIFO_STAT FIFO Status Register 0001

Bit	15	14	13	12	11	10	9	8	7	6	5	4	3	2	1	0
Name	RD_ADDR				WR_ADDR				FIFO_OFFSET						WR_FULL	RD_EMPTY
Type	RO				RU				RU						RO	RO
Reset	0	0	0	0	0	0	0	0	0	0	0	0			0	1

Bit(s)	Mnemonic	Name	Description
15:12	**RD_ADDR**	RD_ADDR	**Current RD address pointer**

This document contains information that is proprietary to MediaTek Inc.
Unauthorized reproduction or disclosure of this information in whole or in part is strictly prohibited.
MEDIATEK CONFIDENTIAL FOR dengzhenli@ far-sightmobile.com USE ONLY

Bit(s)	Mnemonic	Name	Description
			Only bit [2:0] have physical meanings.
11:8	**WR_ADDR**	WR_ADDR	**Current WR address pointer** Only bit [2:0] have physical meanings.
7:4	**FIFO_OFFSET**	FIFO_OFFSET	**wr_addr[3:0] - rd_addr[3:0]**
1	**WR_FULL**	WR_FULL	**Indicates FIFO is full**
0	**RD_EMPTY**	RD_EMPTY	**Indicates FIFO is empty**

A0120038 FIFO_ADDR_CLR FIFO Address Clear Register 0000

Bit	15	14	13	12	11	10	9	8	7	6	5	4	3	2	1	0
Name																FIFO_ADDR_CLR
Type																WO
Reset																0

Bit(s)	Mnemonic	Name	Description
0	**FIFO_ADDR_CLR**	FIFO_ADDR_CLR	When written with 1'b1, a 1 pulse fifo_addr_clr is generated to clear the FIFO address back to 0.

A0120040 IO_CONFIG IO Config Register 0000

Bit	15	14	13	12	11	10	9	8	7	6	5	4	3	2	1	0
Name													IDLE_OE_EN		SDA_IO_CONFIG	SCL_IO_CONFIG
Type													RW		RW	RW
Reset													0		0	0

Overview: This register is used to configure the I/O for the SDA and SCL lines to select between normal I/O mode or open-drain mode to support wired-and bus.

Bit(s)	Mnemonic	Name	Description
3	**IDLE_OE_EN**	IDLE_OE_EN	0: Does not drive bus in idle state 1: Drive bus in idle state
1	**SDA_IO_CONFIG**	SDA_IO_CONFIG	0: Normal tristate I/O mode 1: Open-drain mode
0	**SCL_IO_CONFIG**	SCL_IO_CONFIG	0: Normal tristate I/O mode 1: Open-drain mode

A0120048 HS High Speed Mode Register 0102

Bit	15	14	13	12	11	10	9	8	7	6	5	4	3	2	1	0
Name		HS_SAMPLE_CNT_DIV				HS_STEP_CNT_DIV				MASTER_CODE					HS_NACKERR_DET_EN	HS_EN

This document contains information that is proprietary to MediaTek Inc.
Unauthorized reproduction or disclosure of this information in whole or in part is strictly prohibited.
MEDIATEK CONFIDENTIAL FOR dengzhenni@far-sightedmobile.com USE ONLY

	15	14	13	12	11	10	9	8	7	6	5	4	3	2	1	0
Type		RW				RW				RW					RW	RW
Reset		0	0	0		0	0	1		0	0	0			1	0

Overview: This register contains options for supporting high speed operation features Each HS half pulse width, i.e. each high or low pulse, is equal to (step_cnt_div+1)*(sample_cnt_div + 1)/13MHz.

Bit(s)	Mnemonic	Name	Description
14:12	**HS_SAMPLE_CNT_DIV**	HS_SAMPLE_CNT_DIV	When the high-speed mode is entered after the master code transfer is completed, the sample width will become dependent on this parameter.
10:8	**HS_STEP_CNT_DIV**	HS_STEP_CNT_DIV	When the high-speed mode is entered after the master code transfer is completed, the number of samples per half pulse width will become dependent on this value.
6:4	**MASTER_CODE**	MASTER_CODE	This is the 3 bit programmable value for the master code to be transmitted.
1	**HS_NACKERR_DET_EN**	HS_NACKERR_DET_EN	**Enables NACKERR detection during the master code transmission** When enabled, if NACK is not received after the master code is transmitted, the transaction will be terminated with a STOP condition.
0	**HS_EN**	HS_EN	**Enables high-speed transaction** *Note: rs_stop must be set to 1.*

A0120050 SOFTRESET Soft Reset Register 0000

Bit	15	14	13	12	11	10	9	8	7	6	5	4	3	2	1	0
Name																**SOFT_RESET**
Type																WO
Reset																0

Bit(s)	Mnemonic	Name	Description
0	**SOFT_RESET**	SOFT_RESET	When written with 1'b1, a 1 pulse soft reset is used as synchronous reset to reset the I2C internal hardware circuits.

A0120060 SPARE SPARE 0000

Bit	15	14	13	12	11	10	9	8	7	6	5	4	3	2	1	0
Name													**SPARE**			
Type													RW			
Reset													0	0	0	0

Bit(s)	Mnemonic	Name	Description
3:0	**SPARE**	SPARE	Reserved for future use

A0120064 DEBUGSTAT Debug Status Register 0020

Bit	15	14	13	12	11	10	9	8	7	6	5	4	3	2	1	0
Name									**BUS_BUSY**	**MASTER_W**	**MASTER_R**	**MASTER_STATE**				

This document contains information that is proprietary to MediaTek Inc.
Unauthorized reproduction or disclosure of this information in whole or in part is strictly prohibited.
MEDIATEK CONFIDENTIAL FOR dengzhenli@ fair-sightedmobile.com USE ONLY

										RITE	EAD					
Type									RO	RO	RO	RO				
Reset									0	0	1	0	0	0	0	0

Bit(s)	Mnemonic	Name	Description
7	BUS_BUSY	SPARE	**Reserved**
6	MASTER_WRITE	MASTER_WRITE	**For debugging only** 1: Current transfer is in the master write dir.
5	MASTER_READ	MASTER_READ	**For debugging only** 1: Current transfer is in the master read dir.
4:0	MASTER_STATE	MASTER_STATE	**(For debugging only) Reads back the current master_state.** 0: Idle state 1: I2c master is preparing to send out the start bit, SCL=1, SDA=1. 2: I2C master is sending out the start bit, SCL=1, SDA=0. 3: I2C master/slave is preparing to transmit data bit, SCL=0, SDA=data bit. (Data bit can be changed when SCL=0.) 4: I2C master/slave is transmitting data bit, SCL=1, SDA=data bit. (Data bit is stable when SCL=1.) 5: I2C master/slave is preparing to transmit the ACK bit, SCL=0, SDA=ack. (The ACK bit can be changed when SCL=0.) 6: I2C master/slave is transmitting the ACK bit, SCL=1, SDA=0. (The ACK bit is stable when SCL=1.) 7: I2C master is preparing to send out stop bit or repeated-start bit, SCL=0, SDA=0/1. (0: Stop bit; 1: Repeated-start bit) 8: I2C master is sending out stop bit or repeated-start bit, SCL=1, SDA=1/0. (0: Repeated-start bit; 1: Stop bit) 9: I2C master is in delay start between two transfers, SCL=1, SDA=1. 10: I2C master is in FIFO wait state; For writing transaction, it means FIFO is empty and I2C master is waiting for DMA controller to write data into FIFo. For reading transaction, it means FIFO is full and I2C master is waiting for DMA controller to read data from FIFOo, SCL=0, SDA=don't care. 12: I2C master is preparing to send out data bit of master code. This state is used only in high-speed transaction, SCL=0, SDA=data bit of master code. (Data bit of master code can be changed when SCL=0.) 13: I2C master is sending out data bit of master code. This state is used only in high-speed transaction, SCL=1, SDA=data bit of master code. (Data bit of master code is stable when SCL=1.) 14: I2C master/slave is preparing to transmit the NACK bit, SCL=0, SDA=nack bit. (The NACK bit can be changed when SCL=0.) This state is used only in high-speed transaction. 15: I2C master/slave is transmitting the NACK bit, SCL=1, SDA=1. This state is used only in high-speed transaction.

A0120068 **DEBUGCTRL** **Debug Control Register** **0000**

Bit	15	14	13	12	11	10	9	8	7	6	5	4	3	2	1	0
Name															APB_DEBUG_RD	FIFO_APB_DEBUG
Type															WO	RW
Reset															0	0

This document contains information that is proprietary to MediaTek Inc.
Unauthorized reproduction or disclosure of this information in whole or in part is strictly prohibited.
MEDIATEK CONFIDENTIAL FOR dengzhenli@ far-sightmobile.com USE ONLY

Bit(s)	Mnemonic	Name	Description
1	**APB_DEBUG_RD**	APB_DEBUG_RD	**Only valid when fifo_apb_debug is set to 1** Writing to this register will generate a 1 pulsed FIFO APB RD signal for reading the FIFO data.
0	**FIFO_APB_DEBUG**	FIFO_APB_DEBUG	**Used for trace 32 debugging** When using trace 32, and the memory map is shown, turning this bit on will block the normal APB read access. The APB read access to the FIFO will then be enabled by writing to apb_debug_rd. 0: Disable 1: Enable

A012006C **TRANSFER_LEN_AUX** **Transfer Length Register (Number of Bytes per Transfer)** **0001**

Bit	15	14	13	12	11	10	9	8	7	6	5	4	3	2	1	0
Name													TRANSFER_LEN			
Type													RW			
Reset													0	0	0	1

Bit(s)	Mnemonic	Name	Description
3:0	**TRANSFER_LEN**	TRANSFER_LEN_AUX	**Only valid when dir_change or transfer_len_change is set to 1. Indicates the number of data bytes to be transferred in 1 transfer unit (excluding slave address byte) for the transfers following the direction change or transfer_len_change** If dir_change =1, the first write transfer length will depend on transfer_len, while the second read transfer length will depend on transfer_len_aux. Dir change is always after the first transfer. Similarly, transfer length change is always after the first transfer. *Note: The value must be set to be bigger than 1; otherwise no transfer will take place.*

A0120074 **TIMEOUT** **Timeout Timing Register** **FFFF**

Bit	15	14	13	12	11	10	9	8	7	6	5	4	3	2	1	0
Name	TIMEOUT															
Type	RW															
Reset	1	1	1	1	1	1	1	1	1	1	1	1	1	1	1	1

Bit(s)	Mnemonic	Name	Description
15:0		TIMEOUT	**Indicates the number of steps to count before time-out** The time-out counter counts only when the time-out mechanism is enabled and has started a transaction.

3.11 I2C/SCCB_18V Controller

3.11.1 General Description

I2C (Inter-IC)/SCCB (Serial Camera Control Bus) is a two-wire serial interface. The two signals are SCL and SDA. SCL is a clock signal that is driven by the master. SDA is a bi-directional data signal

This document contains information that is proprietary to MediaTek Inc.
Unauthorized reproduction or disclosure of this information in whole or in part is strictly prohibited.
MEDIATEK CONFIDENTIAL FOR dengzhenli@fat-sky-mobile.com USE ONLY

that can be driven by either the master or the slave. This generic controller supports the master role and conforms to the I2C specification.

3.11.1.1 Feature

- I2C compliant master mode operation
- Adjustable clock speed for LS/FS mode operation
- Supports 7-bit/10-bit addressing
- Supports high-speed mode
- Supports slave clock extension
- START/STOP/REPEATED START condition
- Manual transfer mode
- Multi-write per transfer (up to 8 data bytes for non-DMA mode)
- Multi-read per transfer (up to 8 data bytes for non-DMA mode)
- Multi-transfer per transaction
- Combined format transfer with length change capability
- Active drive/wired-and I/O configuration

3.11.1.2 Manual Transfer Mode

The controller offers one transfer mode, the manual mode.

When the manual mode is selected, in addition to the slave address register, the controller has a built-in 8byte deep FIFO which allows MCU to prepare up to 8 bytes of data for a write transfer, or read up to 8 bytes of data for a read transfer.

3.11.1.3 Transfer Format Support

This controller has been designed to be as generic as possible in order to support a wide range of devices that may utilize different combinations of transfer formats. Here are the transfer format types that can be supported through different software configuration:

Wording convention note

- Transfer = Anything encapsulated within a Start and Stop or Repeated Start.
- Transfer length = Number of bytes within the transfer
- Transaction = This is the top unit. Everything combined equals 1 transaction.
- Transaction length = Number of transfers to be conducted.

Master to slave dir

Slave to master dir

Single-byte access

This document contains information that is proprietary to MediaTek Inc.
Unauthorized reproduction or disclosure of this information in whole or in part is strictly prohibited.
MEDIATEK CONFIDENTIAL FOR dengzhen@farsightedmobile.com USE ONLY

Single Byte Write

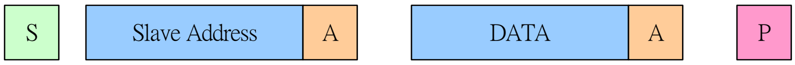

Single Byte Read

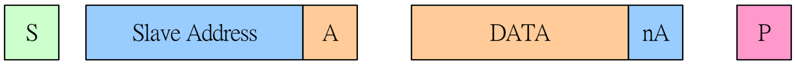

Multi-byte access

Multi Byte Write

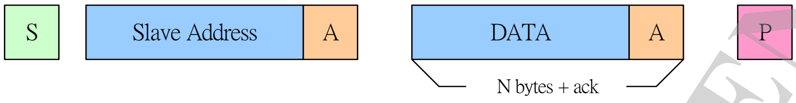

Multi Byte Read

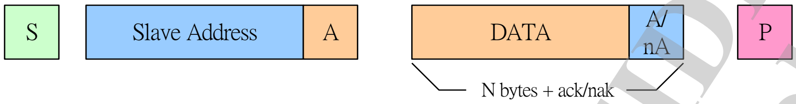

Multi-byte transfer + multi-transfer (same direction)

Multi Byte Write + Multi Transfer

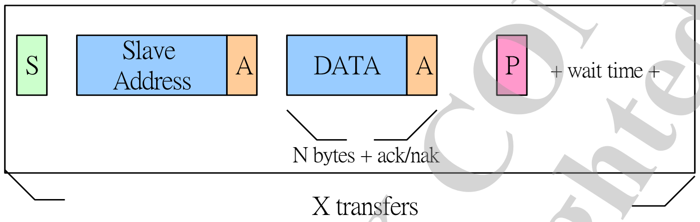

Multi Byte Read + Multi Transfer

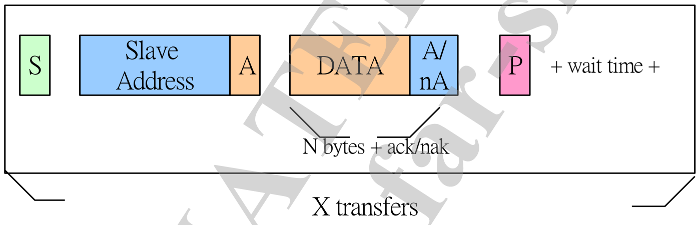

Multi-byte transfer + multi-transfer w RS (same direction)

MEDIATEK CONFIDENTIAL FOR dengzhenli@farsightedmobile.com USE ONLY

This document contains information that is proprietary to MediaTek Inc.
Unauthorized reproduction or disclosure of this information in whole or in part is strictly prohibited.

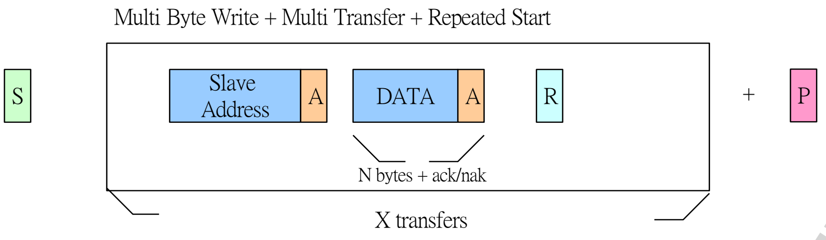

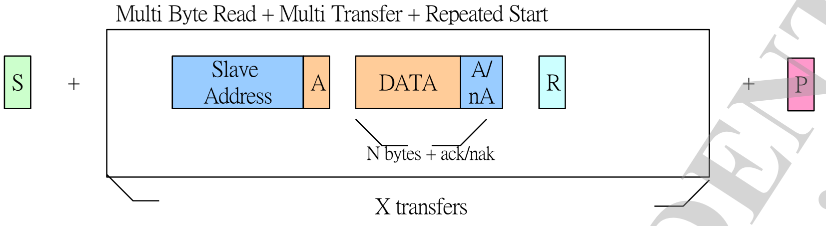

Combined write/read with Repeated Start (direction change)

Note: Only supports write and then read sequence. Read and then write is not supported.

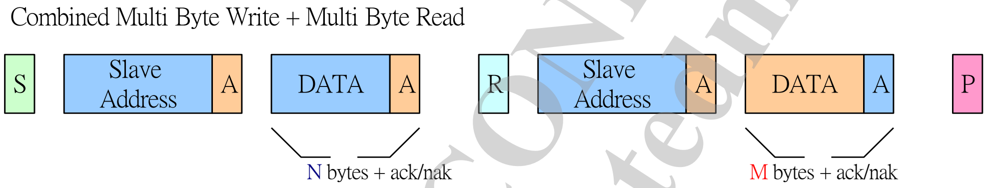

3.11.2 Programming Examples

Common transfer programmable parameters

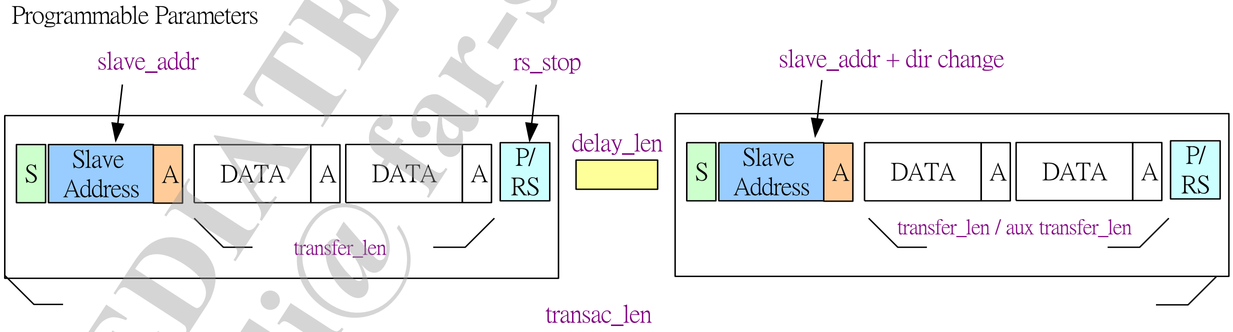

Output waveform timing programmable parameters

MEDIATEK CONFIDENTIAL FOR dengzhenli@far-sightedmobile.com USE ONLY

This document contains information that is proprietary to MediaTek Inc.
Unauthorized reproduction or disclosure of this information in whole or in part is strictly prohibited.

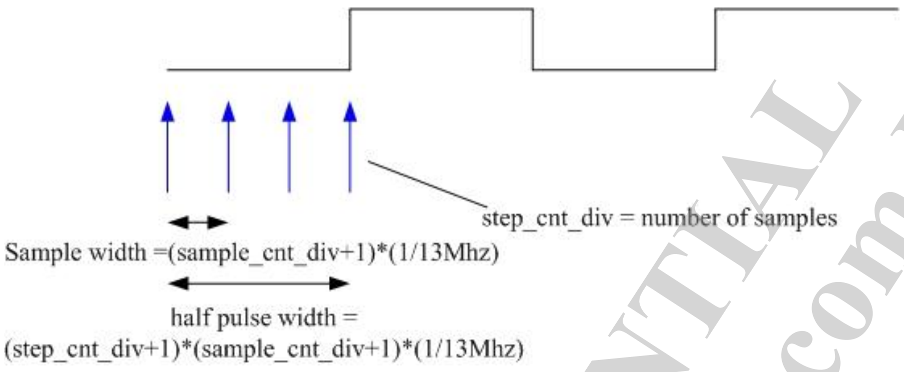

3.11.3 Register Definition

Module name: I2C_SCCB_Controller_18V base address: (+A02A0000h)

Address	Name	Width	Register function
A02A0000	DATA_PORT	16	Data port register
A02A0004	SLAVE_ADDR	16	Slave address register
A02A0008	INTR_MASK	16	**Interrupt mask register** This register provides masks for the corresponding interrupt sources as indicated in the intr_stat register. 1 = Allow interrupt 0 = Disable interrupt *Note: While disabled, the corresponding interrupt will not be asserted, however intr_stat will still be updated with the status, i.e. mask does not affect intr_stat register values.*
A02A000C	INTR_STAT	16	**Interrupt status register** When an interrupt is issued by the I2C controller, this register will need to be read by MCU to determine the cause for the interrupt. After this status has been read and appropriate actions are taken, the corresponding interrupt source will need to be written 1 to clear.
A02A0010	CONTROL	16	Control register
A02A0014	TRANSFER_LEN	16	Transfer length register (number of bytes per transfer)
A02A0018	TRANSAC_LEN	16	Transaction length register (number of transfers per transaction)
A02A001C	DELAY_LEN	16	Inter delay length register
A02A0020	TIMING	16	**Timing control register** LS/FS only. This register is used to control the output waveform timing. Each half pulse width, i.e. each high or low pulse, is equal to (step_cnt_div+1)*(sample_cnt_div + 1)/13MHz
A02A0024	START	16	Start register
A02A0030	FIFO_STAT	16	FIFO status register

This document contains information that is proprietary to MediaTek Inc.
Unauthorized reproduction or disclosure of this information in whole or in part is strictly prohibited.
MEDIATEK CONFIDENTIAL FOR denzhenli@ far-sightmobile.com USE ONLY

Address	Name	Width	Register function
A02A0038	**FIFO_ADDR_CLR**	16	FIFO address clear register
A02A0040	**IO_CONFIG**	16	**IO config register** This register is used to configure the I/O for the SDA and SCL lines to select between normal I/O mode, or open-drain mode to support wired-and bus.
A02A0048	**HS**	16	**High speed mode register** This register contains options for supporting high speed operation features. Each HS half pulse width, i.e. each high or low pulse, is equal to (step_cnt_div+1)*(sample_cnt_div + 1)/13MHz
A02A0050	**SOFTRESET**	16	Soft reset register
A02A0060	**SPARE**	16	SPARE
A02A0064	**DEBUGSTAT**	16	Debug status register
A02A0068	**DEBUGCTRL**	16	Debug control register
A02A006C	**TRANSFER_LEN_AUX**	16	Transfer length register (number of bytes per transfer)
A02A0074	**TIMEOUT**	16	Timeout timing register

A02A0000 DATA_PORT Data Port Register 0000

Bit	15	14	13	12	11	10	9	8	7	6	5	4	3	2	1	0
Name									DATA_PORT							
Type									RW							
Reset									0	0	0	0	0	0	0	0

Bit(s)	Mnemonic	Name	Description
7:0	**DATA_PORT**	DATA_PORT	**FIFO access port** During master write sequences (slave_addr[0] = 0), this port can be written by APB, and during master read sequences (slave_addr[0] = 1), this port can be read by APB. *Note: Slave_addr must be set correctly before accessing FIFO.* For debugging only: If the fifo_apb_debug bit is set, FIFO can be read and written by the APB.

A02A0004 SLAVE_ADDR Slave Address Register 00BF

Bit	15	14	13	12	11	10	9	8	7	6	5	4	3	2	1	0
Name									SLAVE_ADDR							
Type									RW							
Reset									1	0	1	1	1	1	1	1

Bit(s)	Mnemonic	Name	Description
7:0	**SLAVE_ADDR**	SLAVE_ADDR	**Specifies the slave address of the device to be accessed** Bit 0 is defined by the I2C protocol as a bit that indicates the direction of transfer.

This document contains information that is proprietary to MediaTek Inc.
Unauthorized reproduction or disclosure of this information in whole or in part is strictly prohibited.
MEDIATEK CONFIDENTIAL FOR dengzhenli@ farsightedmobile.com USE ONLY

Bit(s)	Mnemonic	Name	Description
			0: Master write 1: Master read

A02A0008 INTR_MASK Interrupt Mask Register 0000

Bit	15	14	13	12	11	10	9	8	7	6	5	4	3	2	1	0
Name												MASK_TIMEOUT		MASK_HS_NACKERR	MASK_ACKERR	MASK_TRANSAC_COMP
Type												RW		RW	RW	RW
Reset												0		0	0	0

Overview: This register provides masks for the corresponding interrupt sources as indicated in the intr_stat register. 1 = allow interrupt; 0 = disable interrupt Note that while disabled, the corresponding interrupt will not be asserted. However, intr_stat will still be updated with the status, i.e. mask does not affect intr_stat register values.

Bit(s)	Mnemonic	Name	Description
4	**MASK_TIMEOUT**	MASK_TIMEOUT	Setting this value to 0 will mask TIMEOUT interrupt signal.
2	**MASK_HS_NACKERR**	MASK_HS_NACKERR	Setting this value to 0 will mask HS_NACKERR interrupt signal.
1	**MASK_ACKERR**	MASK_ACKERR	Setting this value to 0 will mask ACK_ERR interrupt signal.
0	**MASK_TRANSAC_COMP**	MASK_TRANSAC_COMP	Setting this value to 0 will mask TRANSAC_COMP interrupt signal.

A02A000C INTR_STAT Interrupt Status Register 0000

Bit	15	14	13	12	11	10	9	8	7	6	5	4	3	2	1	0
Name												TIMEOUT	ARB_LOST	HS_NACKERR	ACKERR	TRANSAC_COMP
Type												W1C	W1C	W1C	W1C	W1C
Reset												0	0	0	0	0

Overview: When an interrupt is issued by the I2C controller, this register will need to be read by MCU to determine the cause for the interrupt. After this status has been read and appropriate actions are taken, the corresponding interrupt source will need to be written 1 to clear.

Bit(s)	Mnemonic	Name	Description
4	**TIMEOUT**	TIMEOUT_IRQ	This status is asserted if time-out is enabled and the timer expires. The internal master state machine will stop, and MCU will need to manually clear the state machine by either issuing software reset by disabling the transact_en bit. Time-out can be used to detect PCB or I2C malfunction.
3	**ARB_LOST**	SPARE	**Reserved**
2	**HS_NACKE**	HS_NACKERR	This status is asserted if HS master code NACK error detection is

This document contains information that is proprietary to MediaTek Inc.
Unauthorized reproduction or disclosure of this information in whole or in part is strictly prohibited.
MEDIATEK CONFIDENTIAL FOR dengzhenli@far-sightedmobile.com USE ONLY

Bit(s)	Mnemonic	Name	Description
	RR		enabled. If enabled, HS master code NACK err will cause transaction to end, and stop will be issued.
1	**ACKERR**	ACKERR	This status is asserted if ACK error detection is enabled. If enabled, ACKERR will cause transaction to end, and stop will be issued.
0	**TRANSAC_COMP**	TRANSAC_COMP	This status is asserted when a transaction is completed successfully.

A02A0010 CONTROL Control Register 0000

Bit	15	14	13	12	11	10	9	8	7	6	5	4	3	2	1	0
Name								**TIMEOUT_EN**	**RESET_BUS_BUSY_EN**	**TRANSFER_LEN_CHANGE**	**ACKERR_DET_EN**	**DIR_CHANGE**	**CLK_EXT_EN**		**RS_STOP**	
Type								RW	RW	RW	RW	RW	RW		RW	
Reset								0	0	0	0	0	0		0	

Bit(s)	Mnemonic	Name	Description
8	**TIMEOUT_EN**	TIMEOUT_EN	**Enables time-out mechanism** When enabled, if SCL stays at 0 for too long period of time due to I2C slave holds SCL at 0 for too long or SCL stucks at 0 due to PCB issue, the master shall terminate the transaction, stop the internal state machine and assert time-out interrupt. MCU shall handle this case appropriately and reset the master and FIFO address before reissuing the transaction again. If this option is disabled, the HW timer will not count and nor expire forever. 0: Disable 1: Enable
7	**RESET_BUS_BUSY_EN**	SPARE	**Reserved**
6	**TRANSFER_LEN_CHANGE**	TRANSFER_LEN_CHANGE	**Specifies whether or not to change the transfer length after the fist transfer is completed** If enabled, the transfers after the first transfer will use the transfer_len_aux parameter. 0: Disable 1: Enable
5	**ACKERR_DET_EN**	ACKERR_DET_EN	**Enables slave ACK error detection** When enabled, if slave ACK error is detected, the master shall terminate the transaction by issuing a STOP condition and then assert the ACKERR interrupt. MCU handles this case appropriately then resets the FIFO address before reissuing transaction. If this option is disabled, the controller will ignore slave ACK error and keep on scheduled transaction. 0: Disable 1: Enable
4	**DIR_CHANGE**	DIR_CHANGE	**Combined transfer format, where the direction of transfer is to be changed from write to read after the FIRST RS condition** *Note: When set to 1, the transfers after the direction change will be based on the transfer_len_aux parameter.* 0: Disable 1: Enable
3	**CLK_EXT_E**	CLK_EXT_EN	**I2C spec allows slaves to hold the SCL line low if it is not yet**

This document contains information that is proprietary to MediaTek Inc.
Unauthorized reproduction or disclosure of this information in whole or in part is strictly prohibited.
MEDIATEK CONFIDENTIAL FOR dengzhenli@fareastmobile.com USE ONLY

Bit(s)	Mnemonic	Name	Description
	N		**ready for further processing** Therefore, if this bit is set to 1, the master controller will enter a high wait state until the slave releases the SCL line.
1	**RS_STOP**	RS_STOP	**In LS/FS mode, this bit affects multi-transfer transaction only.** It controls whether or not the REPEATED-START condition is used between transfers. The last ending transfer always ends with a STOP. In HS mode, this bit must be set to 1. 0: Use STOP 1: Use REPEATED-START

A02A0014 **TRANSFER_LEN** **Transfer Length Register (Number of Bytes per Transfer)** **0001**

Bit	15	14	13	12	11	10	9	8	7	6	5	4	3	2	1	0
Name													TRANSFER_LEN_AUX			
Type													RW			
Reset													0	0	0	1

Bit(s)	Mnemonic	Name	Description
3:0	**TRANSFER_LEN_AUX**	TRANSFER_LEN	**Indicates the number of data bytes to be transferred in 1 transfer unit (excluding slave address byte)** *Note: The value must be set to be bigger than 1; otherwise no transfer will take place.*

A02A0018 **TRANSAC_LEN** **Transaction Length Register (Number of Transfers per Transaction)** **0001**

Bit	15	14	13	12	11	10	9	8	7	6	5	4	3	2	1	0
Name									TRANSAC_LEN							
Type									RW							
Reset									0	0	0	0	0	0	0	1

Bit(s)	Mnemonic	Name	Description
7:0	**TRANSAC_LEN**	TRANSAC_LEN	**Indicates the number of transfers to be transferred in 1 transaction** *Note: The value must be set to be bigger than 1; otherwise no transfer will take place.*

A02A001C **DELAY_LEN** **Inter Delay Length Register** **0002**

Bit	15	14	13	12	11	10	9	8	7	6	5	4	3	2	1	0
Name									DELAY_LEN							
Type									RW							
Reset									0	0	0	0	0	0	1	0

Bit(s)	Mnemonic	Name	Description
7:0	**DELAY_LEN**	DELAY_LEN	**Sets up wait delay between consecutive transfers when RS_STOP bit is set to 0** Unit: Half the pulse width

This document contains information that is proprietary to MediaTek Inc.
Unauthorized reproduction or disclosure of this information in whole or in part is strictly prohibited.
FOR dengzhenli@ far-sightemobile.com USE ONLY MEDIATEK CONFIDENTIAL

A02A0020 TIMING Timing Control Register 1303

Bit	15	14	13	12	11	10	9	8	7	6	5	4	3	2	1	0
Name	**DATA_READ_ADJ**	**DATA_READ_TIME**				**SAMPLE_CNT_DIV**					**STEP_CNT_DIV**					
Type	RW	RW				RW					RW					
Reset	0	0	0	1		0	1	1			0	0	0	0	1	1

Overview: LS/FS only. This register is used to control the output waveform timing. Each half pulse width, i.e. each high or low pulse, is equal to (step_cnt_div+1)*(sample_cnt_div + 1)/13MHz

Bit(s)	Mnemonic	Name	Description
15	**DATA_READ_ADJ**	DATA_READ_ADJ	When set to 1, data latch in sampling time during master reads are adjusted according to the DATA_READ_TIME value. Otherwise, by default, the data are latched in at half of the high pulse width point. This value must be set to be smaller than or equal to half the high pulse width.
14:12	**DATA_READ_TIME**	DATA_READ_TIME	This value is valid only when DATA_READ_ADJ is set to 1. This can be used to adjust so that the data are latched in at earlier sampling points (assuming data are settled by then).
10:8	**SAMPLE_CNT_DIV**	SAMPLE_CNT_DIV	Used for LS/FS only. This adjusts the width of each sample. Sample width = (sample_cnt_div +1)/13MHz
5:0	**STEP_CNT_DIV**	STEP_CNT_DIV	Specifies the number of samples per half pulse width, i.e. each high or low pulse

A02A0024 START Start Register 0000

Bit	15	14	13	12	11	10	9	8	7	6	5	4	3	2	1	0
Name																**START**
Type																RW
Reset																0

Bit(s)	Mnemonic	Name	Description
0	**START**	START	**Starts the transaction on the bus** It is auto de-asserted at the end of the transaction.

A02A0030 FIFO_STAT FIFO Status Register 0001

Bit	15	14	13	12	11	10	9	8	7	6	5	4	3	2	1	0
Name	**RD_ADDR**				**WR_ADDR**				**FIFO_OFFSET**						**WR_FULL**	**RD_EMPTY**
Type	RO				RU				RU						RO	RO
Reset	0	0	0	0	0	0	0	0	0	0	0	0			0	1

Bit(s)	Mnemonic	Name	Description
15:12	**RD_ADDR**	RD_ADDR	**Current RD address pointer**

This document contains information that is proprietary to MediaTek Inc.
Unauthorized reproduction or disclosure of this information in whole or in part is strictly prohibited.

Bit(s)	Mnemonic	Name	Description
			Only bit [2:0] have physical meanings.
11:8	**WR_ADDR**	WR_ADDR	**Current WR address pointer** Only bit [2:0] have physical meanings.
7:4	**FIFO_OFFSET**	FIFO_OFFSET	**wr_addr[3:0] - rd_addr[3:0]**
1	**WR_FULL**	WR_FULL	**Indicates FIFO is full**
0	**RD_EMPTY**	RD_EMPTY	**Indicates FIFO is empty**

A02A0038 FIFO_ADDR_CLR FIFO Address Clear Register 0000

Bit	15	14	13	12	11	10	9	8	7	6	5	4	3	2	1	0
Name																**FIFO_ADDR_CLR**
Type																WO
Reset																0

Bit(s)	Mnemonic	Name	Description
0	**FIFO_ADDR_CLR**	FIFO_ADDR_CLR	When written with 1'b1, a 1 pulse fifo_addr_clr is generated to clear the FIFO address back to 0.

A02A0040 IO_CONFIG IO Config Register 0000

Bit	15	14	13	12	11	10	9	8	7	6	5	4	3	2	1	0
Name													**IDLE_OE_EN**		**SDA_IO_CONFIG**	**SCL_IO_CONFIG**
Type													RW		RW	RW
Reset													0		0	0

Overview: This register is used to configure the I/O for the SDA and SCL lines to select between normal I/O mode or open-drain mode to support wired-and bus.

Bit(s)	Mnemonic	Name	Description
3	**IDLE_OE_EN**	IDLE_OE_EN	0: Does not drive bus in idle state 1: Drive bus in idle state
1	**SDA_IO_CONFIG**	SDA_IO_CONFIG	0: Normal tristate I/O mode 1: Open-drain mode
0	**SCL_IO_CONFIG**	SCL_IO_CONFIG	0: Normal tristate I/O mode 1: Open-drain mode

A02A0048 HS High Speed Mode Register 0102

Bit	15	14	13	12	11	10	9	8	7	6	5	4	3	2	1	0
Name		**HS_SAMPLE_CNT_DIV**				**HS_STEP_CNT_DIV**				**MASTER_CODE**					**HS_NACKERR_DET_EN**	**HS_EN**

MEDIATEK CONFIDENTIAL
FOR dengzhenli@far-sightedmobile.com USE ONLY

This document contains information that is proprietary to MediaTek Inc.
Unauthorized reproduction or disclosure of this information in whole or in part is strictly prohibited.

Type		RW				RW				RW					RW	RW
Reset		0	0	0		0	0	1		0	0	0			1	0

Overview: This register contains options for supporting high speed operation features Each HS half pulse width, i.e. each high or low pulse, is equal to (step_cnt_div+1)*(sample_cnt_div + 1)/13MHz.

Bit(s)	Mnemonic	Name	Description
14:12	**HS_SAMPLE_CNT_DIV**	HS_SAMPLE_CNT_DIV	When the high-speed mode is entered after the master code transfer is completed, the sample width will become dependent on this parameter.
10:8	**HS_STEP_CNT_DIV**	HS_STEP_CNT_DIV	When the high-speed mode is entered after the master code transfer is completed, the number of samples per half pulse width will become dependent on this value.
6:4	**MASTER_CODE**	MASTER_CODE	This is the 3 bit programmable value for the master code to be transmitted.
1	**HS_NACKERR_DET_EN**	HS_NACKERR_DET_EN	**Enables NACKERR detection during the master code transmission** When enabled, if NACK is not received after the master code is transmitted, the transaction will be terminated with a STOP condition.
0	**HS_EN**	HS_EN	**Enables high-speed transaction** *Note: rs_stop must be set to 1.*

A02A0050 SOFTRESET Soft Reset Register 0000

Bit	15	14	13	12	11	10	9	8	7	6	5	4	3	2	1	0
Name																**SOFT_RESET**
Type																WO
Reset																0

Bit(s)	Mnemonic	Name	Description
0	**SOFT_RESET**	SOFT_RESET	When written with 1'b1, a 1 pulse soft reset is used as synchronous reset to reset the I2C internal hardware circuits.

A02A0060 SPARE SPARE 0000

Bit	15	14	13	12	11	10	9	8	7	6	5	4	3	2	1	0
Name													**SPARE**			
Type													RW			
Reset													0	0	0	0

Bit(s)	Mnemonic	Name	Description
3:0	**SPARE**	SPARE	Reserved for future use

A02A0064 DEBUGSTAT Debug Status Register 0020

Bit	15	14	13	12	11	10	9	8	7	6	5	4	3	2	1	0
Name									**BUS_BUSY**	**MASTER_W**	**MASTER_R**	**MASTER_STATE**				

This document contains information that is proprietary to MediaTek Inc.
Unauthorized reproduction or disclosure of this information in whole or in part is strictly prohibited.

										RITE	EAD					
Type									RO	RO	RO	RO				
Reset									0	0	1	0	0	0	0	0

Bit(s)	Mnemonic	Name	Description
7	BUS_BUSY	SPARE	**Reserved**
6	MASTER_WRITE	MASTER_WRITE	**For debugging only** 1: Current transfer is in the master write dir.
5	MASTER_READ	MASTER_READ	**For debugging only** 1: Current transfer is in the master read dir.
4:0	MASTER_STATE	MASTER_STATE	**(For debugging only) Reads back the current master_state.** 0: Idle state 1: I2c master is preparing to send out the start bit, SCL=1, SDA=1. 2: I2C master is sending out the start bit, SCL=1, SDA=0. 3: I2C master/slave is preparing to transmit data bit, SCL=0, SDA=data bit. (Data bit can be changed when SCL=0.) 4: I2C master/slave is transmitting data bit, SCL=1, SDA=data bit. (Data bit is stable when SCL=1.) 5: I2C master/slave is preparing to transmit the ACK bit, SCL=0, SDA=ack. (The ACK bit can be changed when SCL=0.) 6: I2C master/slave is transmitting the ACK bit, SCL=1, SDA=0. (The ACK bit is stable when SCL=1.) 7: I2C master is preparing to send out stop bit or repeated-start bit, SCL=0, SDA=0/1. (0: Stop bit; 1: Repeated-start bit) 8: I2C master is sending out stop bit or repeated-start bit, SCL=1, SDA=1/0. (0: Repeated-start bit; 1: Stop bit) 9: I2C master is in delay start between two transfers, SCL=1, SDA=1. 10: I2C master is in FIFO wait state; For writing transaction, it means FIFO is empty and I2C master is waiting for DMA controller to write data into FIFo. For reading transaction, it means FIFO is full and I2C master is waiting for DMA controller to read data from FIFOo, SCL=0, SDA=don't care. 12: I2C master is preparing to send out data bit of master code. This state is used only in high-speed transaction, SCL=0, SDA=data bit of master code. (Data bit of master code can be changed when SCL=0.) 13: I2C master is sending out data bit of master code. This state is used only in high-speed transaction, SCL=1, SDA=data bit of master code. (Data bit of master code is stable when SCL=1.) 14: I2C master/slave is preparing to transmit the NACK bit, SCL=0, SDA=nack bit. (The NACK bit can be changed when SCL=0.) This state is used only in high-speed transaction. 15: I2C master/slave is transmitting the NACK bit, SCL=1, SDA=1. This state is used only in high-speed transaction.

A02A0068 <u>**DEBUGCTRL**</u> **Debug Control Register** **0000**

Bit	15	14	13	12	11	10	9	8	7	6	5	4	3	2	1	0
Name															APB_DEBUG_RD	FIFO_APB_DEBUG
Type															WO	RW
Reset															0	0

MEDIATEK CONFIDENTIAL
OR dengzhenli@ far-smartmobile.com USE ONL

This document contains information that is proprietary to MediaTek Inc.
Unauthorized reproduction or disclosure of this information in whole or in part is strictly prohibited.

Bit(s)	Mnemonic	Name	Description
1	**APB_DEBUG_RD**	APB_DEBUG_RD	**Only valid when fifo_apb_debug is set to 1** Writing to this register will generate a 1 pulsed FIFO APB RD signal for reading the FIFO data.
0	**FIFO_APB_DEBUG**	FIFO_APB_DEBUG	**Used for trace 32 debugging** When using trace 32, and the memory map is shown, turning this bit on will block the normal APB read access. The APB read access to the FIFO will then be enabled by writing to apb_debug_rd. 0: Disable 1: Enable

A02A006C **TRANSFER_LEN_AUX** **Transfer Length Register (Number of Bytes per Transfer)** **0001**

Bit	15	14	13	12	11	10	9	8	7	6	5	4	3	2	1	0
Name													TRANSFER_LEN			
Type													RW			
Reset													0	0	0	1

Bit(s)	Mnemonic	Name	Description
3:0	**TRANSFER_LEN**	TRANSFER_LEN_AUX	**Only valid when dir_change or transfer_len_change is set to 1. Indicates the number of data bytes to be transferred in 1 transfer unit (excluding slave address byte) for the transfers following the direction change or transfer_len_change** If dir_change =1, the first write transfer length will depend on transfer_len, while the second read transfer length will depend on transfer_len_aux. Dir change is always after the first transfer. Similarly, transfer length change is always after the first transfer. *Note: The value must be set to be bigger than 1; otherwise no transfer will take place.*

A02A0074 **TIMEOUT** **Timeout Timing Register** **FFFF**

Bit	15	14	13	12	11	10	9	8	7	6	5	4	3	2	1	0
Name	TIMEOUT															
Type	RW															
Reset	1	1	1	1	1	1	1	1	1	1	1	1	1	1	1	1

Bit(s)	Mnemonic	Name	Description
15:0		TIMEOUT	**Indicates the number of steps to count before time-out** The time-out counter counts only when the time-out mechanism is enabled and has started a transaction.

3.12 Real Time Clock

3.12.1 General Descriptions

The Real-Time Clock (RTC) module provides time and data information, as well as 32.768kHz clock. By configuring pin XOSC32_ENB, the use of the 32k crystal can be determined, i.e. using a 32k crystal,

This document contains information that is proprietary to MediaTek Inc.
Unauthorized reproduction or disclosure of this information in whole or in part is strictly prohibited.
MEDIATEK CONFIDENTIAL FOR denglizhen@fae-sky-mobile.com USE ONLY

or not to use a 32k crystal. The RTC block has an independent power supply. When the mobile handset is powered off, a dedicated regulator supplies the RTC block. If the main battery is not present, a backup supply such as a small mercury cell battery or a large capacitor is used. In addition to providing timing data, an alarm interrupt is generated and can be used to power up the baseband core. Regulator interrupts corresponding to seconds, minutes, hours and days can be generated whenever the time counter value reaches a maximum value (e.g., 59 for seconds and minutes, 23 for hours, etc.). The year span is supported up to 2127. The maximum day-of-month values, which depend on the leap year condition, are stored in the RTC block.

3.12.2 Register Definition

Module name: RTC Base address: (+A0710000h)

Address	Name	Width	Register function
A0710000	RTC_BBPU	16	**Baseband power up**
A071 0004	RTC_IRQ_STA	16	**RTC IRQ status** This register is fixed to 0 when RTC_POWERKEY1 & RTC_POWERKEY2 unmatch the correct values.
A071 0008	RTC_IRQ_EN	16	**RTC IRQ enable** This register is fixed to 0 when RTC_POWERKEY1 & RTC_POWERKEY2 unmatch the correct values.
A071 000C	RTC_CII_EN	16	**Counter increment IRQ enable** This register activates or de-activates the IRQ generation when the TC counter reaches its maximum value.
A071 0010	RTC_AL_MASK	16	**RTC alarm mask** The alarm condition for alarm IRQ generation depends on whether or not the corresponding bit in this register is masked. Warning: If you set all bits to 1 in RTC_AL_MASK (i.e. RTC_AL_MASK=0x7f) and PWREN=1 in RTC_BBPU, it means the alarm will come every second, not disabled.
A071 0014	RTC_TC_SEC	16	**RTC seconds time counter register**
A071 0018	RTC_TC_MIN	16	**RTC minutes time counter register**
A071001C	RTC_TC_HOU	16	**RTC hours time counter register**
A0710020	RTC_TC_DOM	16	**RTC day-of-month time counter register**
A0710024	RTC_TC_DOW	16	**RTC day-of-week time counter register**
A0710028	RTC_TC_MTH	16	**RTC month time counter register**
A071002C	RTC_TC_YEA	16	**RTC year time counter register**
A0710030	RTC_AL_SEC	16	**RTC second alarm setting register**
A0710034	RTC_AL_MIN	16	**RTC minute alarm setting register**
A0710038	RTC_AL_HOU	16	**RTC hour alarm setting register**
A071003C	RTC_AL_DOM	16	**RTC day-of-month alarm setting register**
A0710040	RTC_AL_DOW	16	**RTC day-of-week alarm setting register**
A0710044	RTC_AL_MTH	16	**RTC month alarm setting register**
A0710048	RTC_AL_YEA	16	**RTC year alarm setting register**

This document contains information that is proprietary to MediaTek Inc.
Unauthorized reproduction or disclosure of this information in whole or in part is strictly prohibited.
MEDIATEK CONFIDENTIAL FOR denglinlin@far-sightedmobile.com USE ONLY

Address	Name	Width	Register function
A071004C	RTC_OSC32CON	16	**OSC32 control** The function is only active when RTC_POWERKEY1 & RTC_POWERKEY2 match the correct values.
A0710050	RTC_POWERKEY1	16	**RTC_POWERKEY1 register**
A0710054	RTC_POWERKEY2	16	**RTC_POWERKEY2 register**
A0710058	RTC_PDN1	16	**PDN1**
A071005C	RTC_PDN2	16	**PDN2**
A0710060	RTC_SPAR0	16	**Spare register for specific purpose**
A0710064	RTC_SPAR1	16	**Spare register for specific purpose**
A0710068	RTC_PROT	16	**Lock/unlock scheme to prevent RTC miswriting**
A071006C	RTC_DIFF	16	**One-time calibration offset** This register is fixed to 0 when RTC_POWERKEY1 & RTC_POWERKEY2 unmatch the correct values.
A0710070	RTC_CALI	16	**Repeat calibration offset** This register is fixed to 0 when RTC_POWERKEY1 & RTC_POWERKEY2 unmatch the correct values.
A0710074	RTC_WRTGR	16	**Enable transfers from core to RTC in queue**
A0710078	RTC_CON	16	**Other RTC control registers** Note: LPRST and LPEN are tied to 0 internally when RTC_POWERKEY1 & RTC_POWERKEY2 do not match the correct values. After changing RTC_CON, write WRTGR = 1 to make it take effect.

A0710000 RTC_BBPU Baseband Power Up 0000

Bit	15	14	13	12	11	10	9	8	7	6	5	4	3	2	1	0
Mne	KEY_BBPU									CBUSY	RELOAD	CLRPKY	AUTO	BBPU		PWREN
Type	WO									RO	WO	WO	RW	RW		RW
Reset	0	0	0	0	0	0	0	0		0	0	0	0	0		0

Bit (s)	Mnemonic	Name	Description
15:8	**KEY_BBPU**	KEY_BBPU	A bus write is acceptable only when KEY_BBPU=0x43.
6	**CBUSY**	CBUSY	The read/write channels between RTC/Core is busy. This bit indicates high after the software program sequence to anyone of RTC data registers and enables the transfer by RTC_WRTGR = 1. In addition, it is high after the reset from low to high due to RTC reload process.
5	**RELOAD**	RELOAD	**Reloads the values from RTC domain to core domain** Generally the RTC will reload and synchronize the data from RTC to core when being reset from 0 to 1. This bit can be treated as a debugging bit.
4	**CLRPKY**	CLRPKY	**Clears powerkey1 and powerkey2 at the same time** In some cases, the software may clear powerkey1 &

This document contains information that is proprietary to MediaTek Inc.
Unauthorized reproduction or disclosure of this information in whole or in part is strictly prohibited.
MEDIATEK CONFIDENTIAL FOR dengzhenli@far-sightedmobile.com USE ONLY

Bit (s)	Mnemonic	Name	Description
			powerkey2. BBWAKEUP depends on the matching specific patterns of powerkey1 and powerkey2. If any one of powerkey1 or powerkey2 or BBPU is cleared, BBWAKEUP will go low immediately. The software cannot program the other control bits without power. By programming RTC_BBPU with CLRPKY = 1 and BBPU = 0 condition, RTC can clear powerkey1, powerkey2 and BBPU at the same time.
3	**AUTO**	AUTO	**Controls if BBWAKEUP is automatically in the low state when SYSRST transitions from high to low.** 0: BBWAKEUP is not automatically in the low state when SYSRST# transitions are from high to low. 1: BBWAKEUP is automatically in the low state when SYSRST# transitions are from high to low. The function is only active when RTC_POWERKEY1 & RTC_POWERKEY2 match the correct values.
2	**BBPU**	BBPU	**Controls the power of PMU** If powerkey1 = A357h and powerkey2 = 67D2h, PMU takes on the value programmed by software; otherwise PMU is low. 0: Power down 1: Power on
0	**PWREN**	PWREN	0: RTC alarm has no action on power switch. 1: When an RTC alarm occurs, BBPU is set to 1 and the system is powered on by RTC alarm wakeup.

A0710004 **RTC_IRQ_STA** **RTC IRQ Status** **0000**

Bit	15	14	13	12	11	10	9	8	7	6	5	4	3	2	1	0
Mne													LPSTA		TCSTA	ALSTA
Type													RC		RC	RC
Reset													0		0	0

Overview: This register is read-cleared and is fixed to 0 when RTC_POWERKEY1 and RTC_POWERKEY2 unmatch the correct values.

Bit (s)	Mnemonic	Name	Description
3	**LPSTA**	LPSTA	**Indicates the IRQ status and whether or not the LPD is asserted** (LPD function is either provided by XOSC32 or EOSC32[9], depending on XOSC32_ENB) 0: No IRQ occurred; the 32K clock is good. 1: IRQ occurred; the 32K clock stops. This can be masked by LP_EN or cleared by initializing LPD.
1	**TCSTA**	TCSTA	**Indicates the IRQ status and whether or not the tick condition has been met.** 0: No IRQ occurred; the tick condition has not been met. 1: IRQ occurred; the tick condition has been met.
0	**ALSTA**	ALSTA	**Indicates the IRQ status and whether or not the alarm condition has been met.**

This document contains information that is proprietary to MediaTek Inc.
Unauthorized reproduction or disclosure of this information in whole or in part is strictly prohibited.
MEDIATEK CONFIDENTIAL FOR dengzhenli@far-sightedmobile.com USE ONLY

Bit (s)	Mnemonic	Name	Description
			0: No IRQ occurred; the alarm condition has not been met. 1: IRQ occurred; the alarm condition has been met.

A0710008 RTC_IRQ_EN RTC IRQ Enable 0000

Bit	15	14	13	12	11	10	9	8	7	6	5	4	3	2	1	0
Mne													LP_EN	ONESHOT	TC_EN	AL_EN
Type													RW	RW	RW	RW
Reset													0	0	0	0

Overview: This register is fixed to 0 when RTC_POWERKEY1 and RTC_POWERKEY2 unmatch the correct values.

Bit (s)	Mnemonic	Name	Description
3	**LP_EN**	LP_EN	**Enables the control bit for IRQ generation if low power detected (32k clock off).** 0: Disable IRQ generations 1: Enable LPD
2	**ONESHOT**	ONESHOT	**Controls automatic reset of AL_EN and TC_EN**
1	**TC_EN**	TC_EN	Enables the control bit for IRQ generation if the tick condition has been met. 0: Disable IRQ generations 1: Enable the tick time match interrupt. Clear the interrupt when ONESHOT is high upon generation of the corresponding IRQ.
0	**AL_EN**	AL_EN	**Enables the control bit for IRQ generation if the alarm condition has been met.** 0: Disable IRQ generations 1: Enable the alarm time match interrupt. Clear the interrupt when ONESHOT is high upon generation of the corresponding IRQ.

A071000C RTC_CII_EN Counter Increment IRQ Enable 0000

Bit	15	14	13	12	11	10	9	8	7	6	5	4	3	2	1	0
Mne							1/8SECCII	1/4SECCII	1/2SECCII	YEACII	MTHCII	DOWCII	DOMCII	HOUCII	MINCII	SECCII
Type							RW	RW	RW	RW	RW	RW	RW	RW	RW	RW
Reset							0	0	0	0	0	0	0	0	0	0

Overview: This register activates or de-activates the IRQ generation when the TC counter reaches its maximum value.

Bit (s)	Mnemonic	Name	Description
9	**1/8SECCII**	SECCII_1_8	Set the bit to 1 to activate the IRQ at each 1/8 of a second update
8	**1/4SECCII**	SECCII_1_4	Set the bit to 1 to activate the IRQ at each 1/4 of a second update
7	**1/2SECCII**	SECCII_1_2	Set the bit to 1 to activate the IRQ at each 1/2 of a second

This document contains information that is proprietary to MediaTek Inc.
Unauthorized reproduction or disclosure of this information in whole or in part is strictly prohibited.
MEDIATEK CONFIDENTIAL FOR dengzhenli@far-sightedmobile.com USE ONLY

Bit (s)	Mnemonic	Name	Description
			update
6	**YEACII**	YEACII	Set the bit to 1 to activate the IRQ at each year update
5	**MTHCII**	MTHCII	Set the bit to 1 to activate the IRQ at each month update
4	**DOWCII**	DOWCII	Set the bit to 1 to activate the IRQ at each day-of-week update
3	**DOMCII**	DOMCII	Set the bit to 1 to activate the IRQ at each day-of-month update
2	**HOUCII**	HOUCII	Set the bit to 1 to activate the IRQ at each hour update
1	**MINCII**	MINCII	Set the bit to 1 to activate the IRQ at each minute update
0	**SECCII**	SECCII	Set this bit to 1 to activate the IRQ at each second update

A0710010 **RTC_AL_MASK** **RTC Alarm Mask** **0000**

Bit	15	14	13	12	11	10	9	8	7	6	5	4	3	2	1	0
Mne										**YEA_MSK**	**MTH_MSK**	**DOW_MSK**	**DOM_MSK**	**HOU_MSK**	**MIN_MSK**	**SEC_MSK**
Type										RW	RW	RW	RW	RW	RW	RW
Reset										0	0	0	0	0	0	0

Overview: The alarm condition for alarm IRQ generation depends on whether or not the corresponding bit in this register is masked. Note that if all bits 1 in RTC_AL_MASK are set (i.e. RTC_AL_MASK = 0x7f) and PWREN = 1 in RTC_BBPU, it means the alarm will come every second, not disabled.

Bit (s)	Mnemonic	Name	Description
6	**YEA_MSK**	YEA_MSK	0: Condition (RTC_TC_YEA = RTC_AL_YEA) is checked to generate the alarm signal. 1: Condition (RTC_TC_YEA = RTC_AL_YEA) is masked, i.e. the value of RTC_TC_YEA does not affect the alarm IRQ generation.
5	**MTH_MSK**	MTH_MSK	0: Condition (RTC_TC_MTH = RTC_AL_MTH) is checked to generate the alarm signal. 1: Condition (RTC_TC_MTH = RTC_AL_MTH) is masked, i.e. the value of RTC_TC_MTH does not affect the alarm IRQ generation.
4	**DOW_MSK**	DOW_MSK	0: Condition (RTC_TC_DOW = RTC_AL_DOW) is checked to generate the alarm signal. 1: Condition (RTC_TC_DOW = RTC_AL_DOW) is masked, i.e. the value of RTC_TC_DOW does not affect the alarm IRQ generation.
3	**DOM_MSK**	DOM_MSK	0: Condition (RTC_TC_DOM = RTC_AL_DOM) is checked to generate the alarm signal. 1: Condition (RTC_TC_DOM = RTC_AL_DOM) is masked, i.e. the value of RTC_TC_DOM does not affect the alarm IRQ generation.
2	**HOU_MSK**	HOU_MSK	0: Condition (RTC_TC_HOU = RTC_AL_HOU) is checked to generate the alarm signal. 1: Condition (RTC_TC_HOU = RTC_AL_HOU) is masked, i.e. the value of RTC_TC_HOU does not affect the alarm IRQ generation.
1	**MIN_MSK**	MIN_MSK	0: Condition (RTC_TC_MIN = RTC_AL_MIN) is checked to generate the alarm signal. 1: Condition (RTC_TC_MIN = RTC_AL_MIN) is masked, i.e.

This document contains information that is proprietary to MediaTek Inc.
Unauthorized reproduction or disclosure of this information in whole or in part is strictly prohibited.
MEDIATEK CONFIDENTIAL FOR dengzhenli@far-sightedmobile.com USE ONLY

Bit (s)	Mnemonic	Name	Description
			the value of RTC_TC_MIN does not affect the alarm IRQ generation.
0	**SEC_MSK**	SEC_MSK	0: Condition (RTC_TC_SEC = RTC_AL_SEC) is checked to generate the alarm signal. 1: Condition (RTC_TC_SEC = RTC_AL_SEC) is masked, i.e. the value of RTC_TC_SEC does not affect the alarm IRQ generation.

A0710014 RTC_TC_SEC RTC Seconds Time Counter Register 0000

Bit	15	14	13	12	11	10	9	8	7	6	5	4	3	2	1	0
Mne											TC_SECOND					
Type											RW					
Reset											0	0	0	0	0	0

Bit (s)	Mnemonic	Name	Description
5:0	**TC_SECOND**	TC_SECOND	**Second initial value for the time counter** Range: 0 ~ 59

A0710018 RTC_TC_MIN RTC Minutes Time Counter Register 0000

Bit	15	14	13	12	11	10	9	8	7	6	5	4	3	2	1	0
Mne											TC_MINUTE					
Type											RW					
Reset											0	0	0	0	0	0

Bit (s)	Mnemonic	Name	Description
5:0	**TC_MINUTE**	TC_MINUTE	**Minute initial value for the time counter** Range: 0 ~ 59

A071001C RTC_TC_HOU RTC Hours Time Counter Register 0000

Bit	15	14	13	12	11	10	9	8	7	6	5	4	3	2	1	0
Mne												TC_HOUR				
Type												RW				
Reset												0	0	0	0	0

Bit (s)	Mnemonic	Name	Description
4:0	**TC_HOUR**	TC_HOUR	**Hour initial value for the time counter** Range: 0 ~ 23

A0710020 RTC_TC_DOM RTC Day-of-month Time Counter Register 0000

Bit	15	14	13	12	11	10	9	8	7	6	5	4	3	2	1	0

MEDIATEK CONFIDENTIAL
FOR dengzhenli@far-sightedmobile.com USE ONLY

This document contains information that is proprietary to MediaTek Inc.
Unauthorized reproduction or disclosure of this information in whole or in part is strictly prohibited.

Mne												**TC_DOM**				
Type												RW				
Reset												0	0	0	0	0

Bit (s)	Mnemonic	Name	Description
4:0	**TC_DOM**	TC_DOM	**Day-of-month initial value for the time counter** The day-of-month maximum value depends on the leap year condition, i.e. 2 LSB of year time counter are zeros.

A0710024 **RTC_TC_DOW** **RTC Day-of-week Time Counter Register** **0000**

Bit	15	14	13	12	11	10	9	8	7	6	5	4	3	2	1	0
Mne														**TC_DOW**		
Type														RW		
Reset														0	0	0

Bit (s)	Mnemonic	Name	Description
2:0	**TC_DOW**	TC_DOW	**Day-of-week initial value for the time counter** Range: 1 ~ 7

A0710028 **RTC_TC_MTH** **RTC Month Time Counter Register** **0000**

Bit	15	14	13	12	11	10	9	8	7	6	5	4	3	2	1	0
Mne													**TC_MONTH**			
Type													RW			
Reset													0	0	0	0

Bit (s)	Mnemonic	Name	Description
3:0	**TC_MONTH**	TC_MONTH	**Month initial value for the time counter** Range: 1 ~ 12

A071002C **RTC_TC_YEA** **RTC Year Time Counter Register** **0000**

Bit	15	14	13	12	11	10	9	8	7	6	5	4	3	2	1	0
Mne										**TC_YEAR**						
Type										RW						
Reset										0	0	0	0	0	0	0

Bit (s)	Mnemonic	Name	Description
6:0	**TC_YEAR**	TC_YEAR	**Year initial value for the time counter** Range: 0 ~ 127 (2000-2127). The software can bias the year as multiples of 4 for the internal leap-year formula. Here are 3 examples: 2000 ~ 2127, 1972 ~ 2099 and 1904 ~ 2031. To simplify the process, the RTC hardware treats all 4-multiple as leap years. If the range you

MEDIATEK CONFIDENTIAL FOR dengzhenlin@ far-sightedmobile.com USE ONLY

This document contains information that is proprietary to MediaTek Inc.
Unauthorized reproduction or disclosure of this information in whole or in part is strictly prohibited.

Bit (s)	Mnemonic	Name	Description
			define includes non-leap 4-multiple year (e.g. 2100), please adjust it to the correct date by yourselves. (e.g. change Feb. 29th, 2100 to Mar. 1st, 2100). It is suggested to bias the range to be bigger than 1900 and smaller than 2100 to evade the manual adjustment, i.e. the bias values are suggested to be in the range of [-28,-96], that are (1972~ 2099) ~ (1904~ 2031). The formal leap formula: If year modulo 400 is 0 then leap Else if year modulo 100 is 0 then no_leap Else if year modulo 4 is 0 then leap Else no_leap

A0710030 RTC_AL_SEC RTC Second Alarm Setting Register 0000

Bit	15	14	13	12	11	10	9	8	7	6	5	4	3	2	1	0
Mne											AL_SECOND					
Type											RW					
Reset											0	0	0	0	0	0

Bit (s)	Mnemonic	Name	Description
5:0	**AL_SECOND**	AL_SECOND	**Second value of the alarm counter setting** Range: 0 ~ 59

A0710034 RTC_AL_MIN RTC Minute Alarm Setting Register 0000

Bit	15	14	13	12	11	10	9	8	7	6	5	4	3	2	1	0
Mne											AL_MINUTE					
Type											RW					
Reset											0	0	0	0	0	0

Bit (s)	Mnemonic	Name	Description
5:0	**AL_MINUTE**	AL_MINUTE	**Minute value of the alarm counter setting** Range: 0 ~ 59

A0710038 RTC_AL_HOU RTC Hour Alarm Setting Register 0000

Bit	15	14	13	12	11	10	9	8	7	6	5	4	3	2	1	0
Mne	NEW_SPARE0											AL_HOUR				
Type	RW											RW				
Reset	0	0	0	0	0	0	0	0				0	0	0	0	0

Bit (s)	Mnemonic	Name	Description
15:8	**NEW_SPARE0**	NEW_SPARE0	**New spare-register 0**
4:0	**AL_HOUR**	AL_HOUR	**Hour value of the alarm counter setting**

This document contains information that is proprietary to MediaTek Inc.
Unauthorized reproduction or disclosure of this information in whole or in part is strictly prohibited.
MEDIATEK CONFIDENTIAL FOR dengzhenli@far-sightedmobile.com USE ONLY

Bit (s)	Mnemonic	Name	Description
			Range: 0 ~ 23

A071003C RTC_AL_DOM RTC Day-of-month Alarm Setting Register 0000

Bit	15	14	13	12	11	10	9	8	7	6	5	4	3	2	1	0
Mne	NEW_SPARE1											AL_DOM				
Type	RW											RW				
Reset	0	0	0	0	0	0	0	0				0	0	0	0	0

Bit (s)	Mnemonic	Name	Description
15:8	**NEW_SPARE 1**	NEW_SPARE 1	**New spare-register 1**
4:0	**AL_DOM**	AL_DOM	**Day-of-month value of the alarm counter setting** The day-of-month maximum value depends on the leap year condition, i.e. 2 LSB of year time counter are zeros.

A0710040 RTC_AL_DOW RTC Day-of-week Alarm Setting Register 0000

Bit	15	14	13	12	11	10	9	8	7	6	5	4	3	2	1	0
Mne	NEW_SPARE2													AL_DOW		
Type	RW													RW		
Reset	0	0	0	0	0	0	0	0						0	0	0

Bit (s)	Mnemonic	Name	Description
15:8	**NEW_SPARE 2**	NEW_SPARE 2	**New spare-register 2**
2:0	**AL_DOW**	AL_DOW	**Day-of-week value of the alarm counter setting** Range: 1 ~ 7

A0710044 RTC_AL_MTH RTC Month Alarm Setting Register 0000

Bit	15	14	13	12	11	10	9	8	7	6	5	4	3	2	1	0
Mne	NEW_SPARE3												AL_MONTH			
Type	RW												RW			
Reset	0	0	0	0	0	0	0	0					0	0	0	0

Bit (s)	Mnemonic	Name	Description
15:8	**NEW_SPARE 3**	NEW_SPARE 3	New spare-register 3.
3:0	**AL_MONTH**	AL_MONTH	Month value of the alarm counter setting. Range: 1 ~ 12

A0710048 RTC_AL_YEA RTC Year Alarm Setting Register 0000

This document contains information that is proprietary to MediaTek Inc.
Unauthorized reproduction or disclosure of this information in whole or in part is strictly prohibited.

Bit	15	14	13	12	11	10	9	8	7	6	5	4	3	2	1	0
Mne	NEW_SPARE4									AL_YEAR						
Type	RW									RW						
Reset	0	0	0	0	0	0	0	0		0	0	0	0	0	0	0

Bit (s)	Mnemonic	Name	Description
15:8	**NEW_SPARE 4**	NEW_SPARE 4	**New spare-register 4**
6:0	**AL_YEAR**	AL_YEAR	**Year value of the alarm counter setting** Range: 0 ~ 127 (2000-2127)

A071004C **RTC_OSC32CON** **OSC32 Control** **0000**

Bit	15	14	13	12	11	10	9	8	7	6	5	4	3	2	1	0
Mne	EOSC32_RSV							EMBCK_SEL_MODE			XOSC32_ENB	XOSCCALI				
Type	RW							RW			RO	RW				
Reset	-	0	0	0	0	1	0	0	0	0	-	0	1	1	1	1

Overview: The function is only active when RTC_POWERKEY1 & RTC_POWERKEY2 match the correct values.

Bit (s)	Mnemonic	Name	Description
15:9	**OSC32_RSV**	OSC32_RSV	**OSC32 reserved bits** Keep it at 0x2.
8:6	**EMB_MODE**	EMBCK_SEL	**Mode setting for crystal removal case**
5	**XOSC32_ENB**	XOSC32_ENB	**XOSC32_ENB** Reads pin XOSC32_ENB configuration to know the 32k crystal usage. 0: Use 32k crystal 1: Does not use 32k crystal.
4:0	**XOSCCALI**	XOSCCALI	**Controls XOSC32/EOSC32 caliration** If XOSC32_ENB(RTC_OSC32CON[5]) = 0, XOSCCALI controls the bias current for 32k xtal in XOSC32. When powerkeys do not match, the default value is 0x7. If XOSC32_ENB(RTC_OSC32CON[5]) = 1, XOSCCALI is the trimming value for EOSC32. SW needs to find the best trimming value for EOSC32 when the 1st power-on by frequency meter. When powerkeys do not match, the default value is 0xf.

OSC32CON is not protected by RTC_PROT because RTC_PROT needs 32.768kHz clock to unlock. Similarly, to modify RTC_OSC32CON, writing RTC_WRTGR is not needed, neither. To protect the OSC32 control bits, follow the *update sequence* to update RTC_OSC32CON. After the updating sequence is completed, reload to acquire the internal RTC_OSC32CON. This register needs to be initialized **before** writing powerkeys match.

Update sequence:

Step 1: Write RTC_OSC32CON = 0x1a57 and wait until CBUSY=0

Step 2: Write RTC_OSC32CON = 0x2b68 and wait until CBUSY=0

This document contains information that is proprietary to MediaTek Inc.
Unauthorized reproduction or disclosure of this information in whole or in part is strictly prohibited.

Step 3: Write the real value you would like to write RTC_OSC32CON and wait until CBUSY=0
Step 4: Return to step 1 if you need to modify RTC_OSC32CON again.

Note: RTC_OSC32CON should be set before writing POWERKEY1 and POWERKEY2 to the correct value.

A0710050 **RTC_POWERKEY1** **RTC_POWERKEY1 Register** **0000**

Bit	15	14	13	12	11	10	9	8	7	6	5	4	3	2	1	0
Mne	RTC_POWERKEY1															
Type	RW															
Reset	0	0	0	0	0	0	0	0	0	0	0	0	0	0	0	0

Bit (s)	Mnemonic	Name	Description
15:0	RTC_POWERKEY1	RTC_POWERKEY1	

A0710054 **RTC_POWERKEY2** **RTC_POWERKEY2 Register** **0000**

Bit	15	14	13	12	11	10	9	8	7	6	5	4	3	2	1	0
Mne	RTC_POWERKEY2															
Type	RW															
Reset	0	0	0	0	0	0	0	0	0	0	0	0	0	0	0	0

Bit (s)	Mnemonic	Name	Description
15:0	RTC_POWERKEY2	RTC_POWERKEY2	

These register sets are used to determine if the real-time clock has been programmed by the software, i.e. the time value in real time clock is correct. When the real-time clock is first powered on, the register contents are all undefined, and therefore the time values shown are incorrect. The software needs to know if the real-time clock has been programmed. Hence, the two registers are defined to solve this power-on issue. After the software programs the correct value, the two register sets will not need to be updated. In addition to programming the correct time value, when the contents of the register sets are wrong, the interrupt will not be generated. Therefore, the-real time clock will not generate the interrupts before the software programs the registers, and unwanted interrupt due to wrong time value will not occur. The correct values of these two register sets are:

RTC_POWERKEY1	A357h
RTC_POWERKEY2	67D2h

A0710058 **RTC_PDN1** **PDN1** **0000**

Bit	15	14	13	12	11	10	9	8	7	6	5	4	3	2	1	0
Mne	RTC_PDN1															

This document contains information that is proprietary to MediaTek Inc.
Unauthorized reproduction or disclosure of this information in whole or in part is strictly prohibited.
MEDIATEK CONFIDENTIAL FOR dengzhenli@far-sightedmobile.com USE ONLY

Type	RW															
Reset	0	0	0	0	0	0	0	0	0	0	0	0	0	0	0	0

Bit (s)	Mnemonic	Name	Description
15:0	**RTC_PDN1**	RTC_PDN1	Spare registers for software to keep the power-on and power-off state information

A071005C RTC_PDN2 PDN2 0000

Bit	15	14	13	12	11	10	9	8	7	6	5	4	3	2	1	0
Mne	**RTC_PDN2**															
Type	RW															
Reset	0	0	0	0	0	0	0	0	0	0	0	0	0	0	0	0

Bit (s)	Mnemonic	Name	Description
15:0	**RTC_PDN2**	RTC_PDN2	Spare registers for software to keep power-on and power-off state information

A0710060 RTC_SPAR0 Spare Register For Specific Purpose 0000

Bit	15	14	13	12	11	10	9	8	7	6	5	4	3	2	1	0
Mne	**RTC_SPAR0**															
Type	RW															
Reset	0	0	0	0	0	0	0	0	0	0	0	0	0	0	0	0

Bit (s)	Mnemonic	Name	Description
15:0	**RTC_SPAR0**	RTC_SPAR0	Reserved for specific purposes

A0710064 RTC_SPAR1 Spare Register For Specific Purpose 0000

Bit	15	14	13	12	11	10	9	8	7	6	5	4	3	2	1	0
Mne	**RTC_SPAR1**															
Type	RW															
Reset	0	0	0	0	0	0	0	0	0	0	0	0	0	0	0	0

Bit (s)	Mnemonic	Name	Description
15:0	**RTC_SPAR1**	RTC_SPAR1	Reserved for specific purposes

A0710068 RTC_PROT Lock/Unlock Scheme to Prevent RTC Miswriting 0000

Bit	15	14	13	12	11	10	9	8	7	6	5	4	3	2	1	0
Mne	**RTC_PROT**															
Type	RW															
Reset	0	0	0	0	0	0	0	0	0	0	0	0	0	0	0	0

This document contains information that is proprietary to MediaTek Inc.
Unauthorized reproduction or disclosure of this information in whole or in part is strictly prohibited.
MEDIATEK CONFIDENTIAL FOR dengzhenli@far-sightedmobile.com USE ONLY

Bit (s)	Mnemonic	Name	Description

15:0	**RTC_PROT**	RTC_PROT	**Protects RTC write interface by RTC_PROT**
			Whether the RTC writing interface is enabled or not is decided by RTC_PROT contents. When RTC_POWERKEY1 & RTC_POWERKEY2 are not equal to the correct values, the RTC writing interface will always be enabled. However, when they match, the user has to perform the unlock flow to enable the writing interface.
			
			Unlock flow:
			Step1: *RTC_PROT=0x586a;
			Step2: *RTC_WRTGR=1;
			Step3: while(*RTC_BBPU & 0x40) {}; // Timeout period: 120usec
			Step4: *RTC_PROT=0x9136;
			Step5: *RTC_WRTGR=1;
			Step6: while(*RTC_BBPU & 0x40) {}; // Timeout period: 120usec
			
			Note: Always keep RTC in the unlock state in the power-on mode. Once the normal RTC content writing is completed, DO NOT modify the RTC_PROT content to lock RTC. The RTC_PROT contents will be cleared automatically when being powered off immediately.

A071006C **RTC_DIFF** **One-time Calibration Offset** **0000**

Bit	15	14	13	12	11	10	9	8	7	6	5	4	3	2	1	0
Mne	**RESERVED**	**RESERVED**			**RTC_DIFF**											
Type	RW	RO			RW											
Reset	-	-			0	0	0	0	0	0	0	0	0	0	0	0

Overview: This register is fixed to 0 when RTC_POWERKEY1 and RTC_POWERKEY2 unmatch the correct values.

Bit (s)	Mnemonic	Name	Description
11:0	**RTC_DIFF**	RTC_DIFF	**Adjusts internal counter of RTC** It takes effect once and returns to 0 when done. In some cases, RTC is faster or slower than the standard. To change RTC_TC_SEC being coarse may cause alarm problem. RTC_DIFF provides a finer time unit. An internal 15-bit counter accumulates in each 32,768Hz clock. Entering a non-0 value to RTC_DIFF will cause the internal RTC counter to increase or decrease RTC_DIFF when RTC_DIFF changes to 0 again. RTC_DIFF represents 2's completement. For example, if you fill in 0xfff into RTC_DIFF, the internal counter will decrease by 1 when RTC_DIFF returns to 0. In other words, you can only use RTC_DIFF continuously if RTC_DIFF is equal to 0 now. *Note: RTC_DIFF ranges from 0x800 (-2048) to 0x7fd (2045). 0x7ff & 0x7fe are forbidden.*

This document contains information that is proprietary to MediaTek Inc.
Unauthorized reproduction or disclosure of this information in whole or in part is strictly prohibited.
MEDIATEK CONFIDENTIAL FOR dengzhenli@far-sighted-mobile.com USE ONLY

A0710070 RTC_CALI Repeat Calibration Offset 0000

Bit	15	14	13	12	11	10	9	8	7	6	5	4	3	2	1	0
Mne	RESERVED	RESERVED	RTC_CALI													
Type	RO	RW	RW													
Reset	0	-	0	0	0	0	0	0	0	0	0	0	0	0	0	0

Overview: This register is fixed to 0 when RTC_POWERKEY1 & RTC_POWERKEY2 unmatch the correct values.

Bit (s)	Mnemonic	Name	Description
13:0	**RTC_CALI**	RTC_CALI	**Provides a repeated calibration scheme** RTC_CALI provides 7-bit calibration capability in 8-second duration, i.e. 5-bit calibration capability in each second. RTC_CALI represents 2's complement form for the user to adjust RTC increase or decrease Due to RTC_CALI is revealed in 8 seconds, the resolution is less than a 1/32768 clock. Avg. resolution: 1/32768/8 = 3.81us Avg. adjust range: -0.244~0.240ms/sec in 2's complement: -0x2000 ~ 0x1fff (-8192 ~ 8191)

A0710074 RTC_WRTGR Enable Transfers From Core to RTC in Queue 0000

Bit	15	14	13	12	11	10	9	8	7	6	5	4	3	2	1	0
Mne																WRTGR
Type																WO
Reset																0

Bit (s)	Mnemonic	Name	Description
0	**WRTGR**	WRTGR	**Enables the transfers from core to RTC** After you modify all the RTC registers and would like to change it, write 1 to RTC_WRTGR to trigger the transfer. The prior writing operation is queued in the core power domain. The pending data will not be transferred to the RTC domain until WRTGR = 1. After WRTGR=1, the pending data will be transferred to the RTC domain sequentially in order of register addresses, from low to high. For example: RTC_BBPU -> RTC_IRQ_EN -> RTC_CII_EN -> RTC_AL_MASK -> RTC_TC_SEC -> etc. CBUSY in RTC_BBPU is equal to 1 in the writing process. Observe CBUSY to determine when the transmission is completed.

A0710078 RTC_CON Other RTC Control Register 0000

Bit	15	14	13	12	11	10	9	8	7	6	5	4	3	2	1	0
Mne	LPSTA_RAW	RESERVED	RESERVED	POWEROFF_SEQ_EN	RESERVED	RESERVED	RESERVED	RESERVED	RESERVED	RESERVED	RESERVED	RESERVED	LPRST	LPEN		VBAT_LPSTA_RAW

This document contains information that is proprietary to MediaTek Inc.
Unauthorized reproduction or disclosure of this information in whole or in part is strictly prohibited.

MEDIATEK CONFIDENTIAL FOR dengzhenli@far-sightedmobile.com USE ONLY

Type	W1C	RW	RW	RW	RW	RW	RW	RW	RW	RW	RW	RW	RW	RW		RW
Reset																

Bit (s)	Mnemonic	Name	Description
15	**LPSTA_RAW**	LPSTA_RAW	**Raw status of LP_STA** Re-initialize LPD to clear this bit. *Note: This bit is always high before LPD initialization sequence after the first power-on.*
3	**LPRST**	LPRST	**Resets LPDETB** Only takes effect when LPEN = 1.
2:1	**LPEN**	LPEN	**Enables LPDETB** LP initialization sequence: 1. Write LPEN = 1, LPRST = 0. Write RTC_WRTGR = 1. wait cbusy down. 2. Write LPEN = 1, LPRST = 1. Write RTC_WRTGR = 1. wait cbusy down. 3. Write LPEN = 1, LPRST = 0. Write RTC_WRTGR = 1. wait cbusy down.
0	**VBAT_LPSTA_RAW**	VBAT_LPSTA_RAW	**Indicates the battery has been in LP state** Software needs to clear this bit for the next time use 0: VBAT has not been in LP state. 1: VBAT has been in LP state. *Note: VBAT LP state = VBAT < 2.5V*

When Vcore always exists, the software can trust the registers and wait for the LP interrupt from RTC if the 32.768 kHz clock stopped or has been stopped.

However, nothing can be trusted after the battery is off (Vrtc may drop). In every boot time, the software checks if LPSTA_RAW = 1. (LP_STA = LPSTA_RAW & LP_IRQ_EN) If true, the RTC contents will no longer be trusted just like powerkeys do not match. You have to initialize the RTC contents in this case.

3.13 Auxiliary ADC Unit

The auxiliary ADC unit is used to monitor the status of the battery and charger, to identify the plugged peripheral, and to perform temperature measurement.

MEDIATEK CONFIDENTIAL FOR dengzhenli@far-sightedmobile.com USE ONLY

This document contains information that is proprietary to MediaTek Inc.
Unauthorized reproduction or disclosure of this information in whole or in part is strictly prohibited.

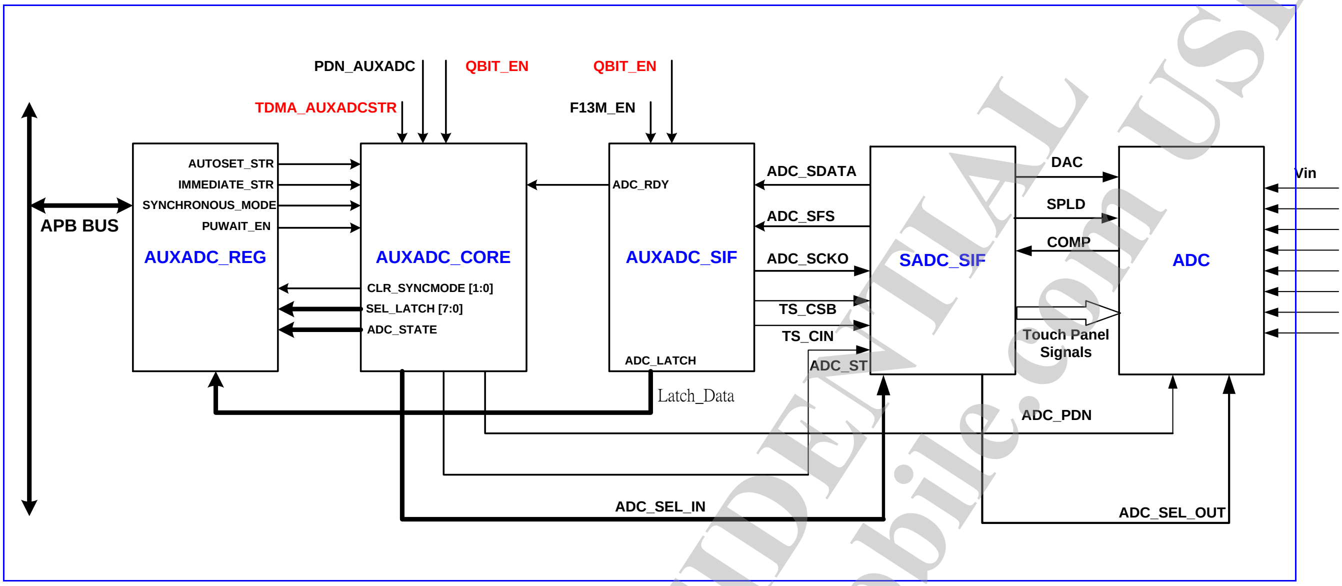

Figure 38. AUXADC architecture

Each channel operates in one of the two modes: immediate mode or timer-triggered mode. The mode of each channel can be individually selected through register AUXADC_CON0. For example, if the flag SYN0 in register AUXADC_CON0 is set, channel 0 will be set in the timer-triggered mode. Otherwise, the channel will operate in the immediate mode.

In the immediate mode, the A/D converter samples the value once only when the flag in the AUXADC_CON1 register is set. For example, if the flag IMM0 in AUXADC_CON1 is set, the A/D converter will sample the data for channel 0. The IMM flags must be cleared and set again to initialize another sampling.

The value sampled for channel 0 is stored in register AUXADC_DAT0, and the value for channel 1 is stored in register AUXADC_DAT1, and so on.

If the AUTOSET flag in register AUXADC_CON3 is set, the auto-sample function will be enabled. The A/D converter samples the data for the channel in which the corresponding data register is read. For example, in the case where the SYN1 flag is not set, the AUTOSET flag is set. When the data register AUXADC_DAT0 is read, the A/D converter will sample the next value for channel 1 immediately.

If multiple channels are selected at the same time, the task will be performed sequentially on every selected channel. For example, if AUXADC_CON1 is set to 0x3f, i.e. 6 channels are selected, the state machine in the unit will start sampling from channel 6 to channel 0 and save the values of each input channel in respective registers. The same process also applies to the timer-triggered mode.

In the timer-triggered mode, the A/D converter samples the value for the channels in which the corresponding SYN flags are set when the TDMA timer counts to the value specified in register TDMA_AUXEV1 placed in the TDMA timer. For example, if AUXADC_CON0 is set to 0x3f, the 6 channels will be selected to be in the timer-triggered mode. The state machine will sample the 6

This document contains information that is proprietary to MediaTek Inc.
Unauthorized reproduction or disclosure of this information in whole or in part is strictly prohibited.
MEDIATEK CONFIDENTIAL
FOR dengzhenli@far-sightedmobile.com USE ONLY

channels sequentially and save the values in registers from AUXADC_DAT0 to AUXADC_DAT5, as it does in the immediate mode.

AUTOCLR*n* in register AUXADC_CON3 is set when it is intended to sample only once after setting up the timer-triggered mode. If the AUTOCLR1 flag is set, after the data for the channels in the timer-triggered mode are stored, the SYN*n* flags in register AUXADC_CON0 will be cleared.

The uses of the immediate mode and timer-triggered mode are mutually exclusive in terms of individual channels.

There are only two external pins (channel 4 ~ 5) for voltage detection. Other channels (0 ~ 3) are for battery voltage, battery current, charger and battery temperature respectively. Channel 9 is used for audio.

Touch panel

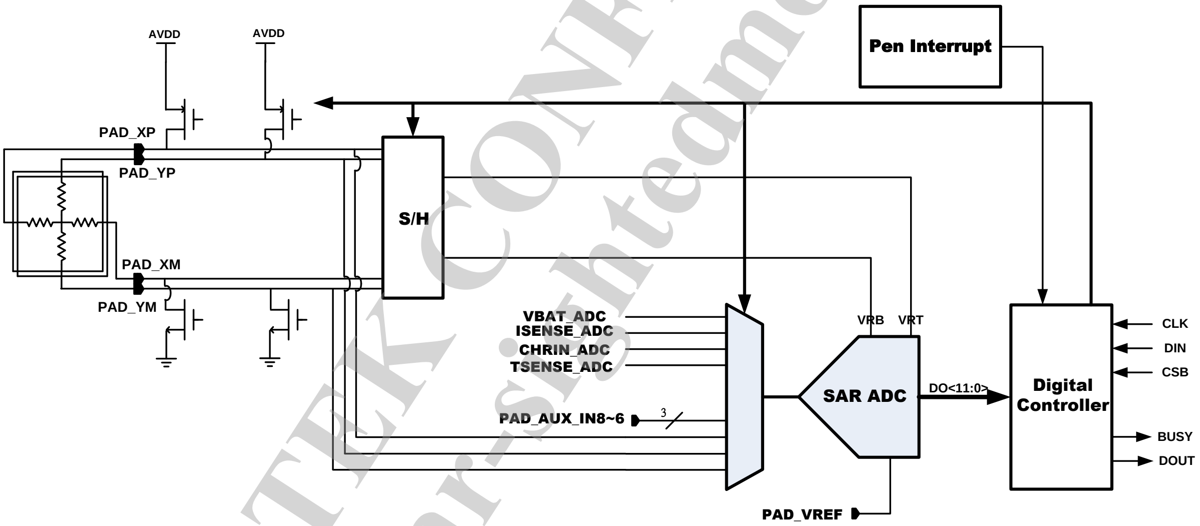

Figure 39. Touch panel circuit structure

Besides the normal sampling of external input voltage, the AUXADC includes the sampling of the touch panel function. For specified axis, the software should program AUX_TS_CMD first then trigger the sample of touch panel in register AUX_TS_CON. The touch panel sampling waveform is shown as the following. After the software polls the status bit in register AUXADC_CON3 to know that the touch panel sample is finished, the software can read back the specified axis value from register AUX_TS_DAT0.

This document contains information that is proprietary to MediaTek Inc.
Unauthorized reproduction or disclosure of this information in whole or in part is strictly prohibited.
MEDIATEK CONFIDENTIAL
FOR dengzhenli@ far-sightedmobile.com USE ONLY

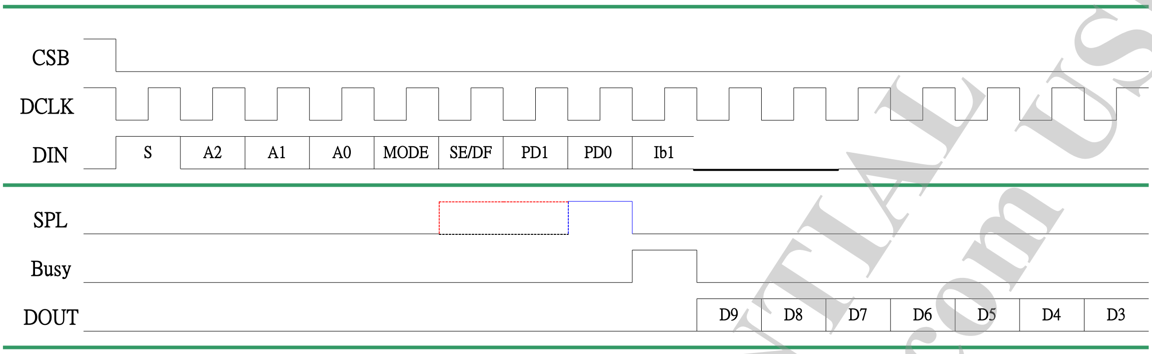

Figure 40. Touch panel sampling waveform

S: Start bit
A2 ~ A0: Addressing bits
Mode: 10-bit or 8-bit
SE/DF: Single end or differential mode
PD1 ~ 0: Power down command

These values are defined in register AUX_TS_CMD. The table below shows the relationship between AUX_TS_CMD and touch panel control signals.

Table 49. Relationship between commands and touch panel control signals

A2	A1	A0	SE/DFB	*CHN_SEL*	ADC In	X switches	Y switches	+REF	-REF
0	0	1	0	C	X+	OFF	ON	Y+	Y-
0	1	0	0	F	X-	OFF	ON	Y+	Y-
0	1	1	0	C	X+	X+ OFF X- ON	Y+ ON Y- OFF	Y+	X-
1	0	0	0	E	Y-	X+ OFF X- ON	Y+ ON Y- OFF	Y+	X-
1	0	1	0	D	Y+	ON	OFF	X+	X-
1	1	0	0	E	Y-	ON	OFF	X+	X-

Table 50. AUXADC channel description

AuxADC Channel ID	Description
Channel 0	VBAT
Channel 1	ISENSE
Channel 2	CHRIN
Channel 3	BATON (BATtemp)
Channel 4	AUXIN4 (external)
Channel 5	ACCDET (external)
Channel 9	ClassAB
Channel 12	XP / External
Channel 13	YP / External

This document contains information that is proprietary to MediaTek Inc.
Unauthorized reproduction or disclosure of this information in whole or in part is strictly prohibited.
MEDIATEK CONFIDENTIAL
FOR denghui@far-sightedmobile.com USE ONLY

AuxADC Channel ID	Description
Channel 14	YM / External
Channel 15	XM / External

3.13.1 Register Definition

Module name: AUXADC Base address: (+A0790000h)

Address	Name	Width	Register Function
A0790000	AUXADC_CON0	16	**AuxiliaryADC Control Register 0** These bits define whether the corresponding channel is sampled or not in the timer-triggered mode. It is associated with the timing offset register TDMA_AUXEV1. It supports multiple flags. The flags can be automatically cleared after those channels are sampled if AUTOCLR1 in register AUXADC_CON3 is set.
A0790004	AUXADC_CON1	16	**AuxiliaryADC Control Register 1** These bits are set individually to sample the data for the corresponding channel. It supports multiple flags.
A079000C	AUXADC_CON3	16	**AuxiliaryADC Control Register 3**
A0790010	AUXADC_DAT0	16	**AuxiliaryADC Channel 0 Register (VBAT)**
A0790014	AUXADC_DAT1	16	**AuxiliaryADC Channel 1 Register (ISENSE)**
A0790018	AUXADC_DAT2	16	**AuxiliaryADC Channel 2 Register (CHRIN)**
A079001C	AUXADC_DAT3	16	**AuxiliaryADC Channel 3 Register (VBATTMP)**
A0790020	AUXADC_DAT4	16	**AuxiliaryADC Channel 4 Register (External)**
A0790024	AUXADC_DAT5	16	**AuxiliaryADC Channel 5 Register (External/ACCDET)**
A0790034	AUXADC_DAT9	16	**AuxiliaryADC Channel 9 Register (ClassAB)**
A0790040	AUXADC_DAT12	16	**AuxiliaryADC Channel 12 Register (External)**
A0790044	AUXADC_DAT13	16	**AuxiliaryADC Channel 13 Register (External)**
A0790048	AUXADC_DAT14	16	**AuxiliaryADC Channel 14 Register (External)**
A079004C	AUXADC_DAT15	16	**AuxiliaryADC Channel 15 Register (External)**
A0790054	AUX_TS_CMD0	16	**Touch Screen Sample Command 0**
A0790058	AUX_TS_CON	16	**Touch Screen Control**
A079005C	AUX_TS_DAT0	16	**Touch Screen Sample DATA 0**
A0790070	AUXADC_DAT_ZCV	16	**AuxiliaryADC ZCV Sample DATA**
A07900D0	AUXADC_CON4	16	**AuxiliaryADC Control Register 4**
A07900D4	AUX_TS_CMD1	16	**Touch Screen Sample Command 1**
A07900D8	AUX_TS_DAT1	16	**Touch Screen Sample DATA 1**

A0790000 AUXADC_CON0 AuxiliaryADC Control Register 0 0000

Bit	15	14	13	12	11	10	9	8	7	6	5	4	3	2	1	0
Name	SYN15	SYN14	SYN13	SYN12			SYN9				SYN5	SYN4	SYN3	SYN2	SYN1	SYN0
Type	R/W	R/W	R/W	R/W			R/W				R/W	R/W	R/W	R/W	R/W	R/W
Reset	0	0	0	0			0				0	0	0	0	0	0

Bit(s)	Mnemonic	Name	Description

This document contains information that is proprietary to MediaTek Inc.
Unauthorized reproduction or disclosure of this information in whole or in part is strictly prohibited.
MEDIATEK CONFIDENTIAL FOR dengzhenli@ far-sighted.com USE ONLY

15	**SYN15**	SYN15	**Channel 15 sync mode** 0: The channel is not selected. 1: The channel is selected.
14	**SYN14**	SYN14	**Channel 14 sync mode** 0: The channel is not selected. 1: The channel is selected.
13	**SYN13**	SYN13	**Channel 13 sync mode** 0: The channel is not selected. 1: The channel is selected.
12	**SYN12**	SYN12	**Channel 12 sync mode** 0: The channel is not selected. 1: The channel is selected.
9	**SYN9**	SYN9	**Channel 9 sync mode** 0: The channel is not selected. 1: The channel is selected.
5	**SYN5**	SYN5	**Channel 5 sync mode** 0: The channel is not selected. 1: The channel is selected.
4	**SYN4**	SYN4	**Channel 4 sync mode** 0: The channel is not selected. 1: The channel is selected.
3	**SYN3**	SYN3	**Channel 3 sync mode** 0: The channel is not selected. 1: The channel is selected.
2	**SYN2**	SYN2	**Channel 2 sync mode** 0: The channel is not selected. 1: The channel is selected.
1	**SYN1**	SYN1	**Channel 1 sync mode** 0: The channel is not selected. 1: The channel is selected.
0	**SYN0**	SYN0	**Channel 0 sync mode** 0: The channel is not selected. 1: The channel is selected.

A0790004 AUXADC_CON1 AuxiliaryADC Control Register 1 0000

Bit	15	14	13	12	11	10	9	8	7	6	5	4	3	2	1	0
Name	**IMM15**	**IMM14**	**IMM13**	**IMM12**			**IMM9**				**IMM5**	**IMM4**	**IMM3**	**IMM2**	**IMM1**	**IMM0**
Type	R/W	R/W	R/W	R/W			R/W				R/W	R/W	R/W	R/W	R/W	R/W
Reset	0	0	0	0			0				0	0	0	0	0	0

Bit(s)	Mnemonic	Name	Description
15	**IMM15**	IMM15	**Channel 15 immediate mode** 0: The channel is not selected. 1: The channel is selected.
14	**IMM14**	IMM14	**Channel 14 immediate mode** 0: The channel is not selected. 1: The channel is selected.
13	**IMM13**	IMM13	**Channel 13 immediate mode** 0: The channel is not selected. 1: The channel is selected.
12	**IMM12**	IMM12	**Channel 12 immediate mode** 0: The channel is not selected. 1: The channel is selected.
9	**IMM9**	IMM9	**Channel 9 immediate mode** 0: The channel is not selected. 1: The channel is selected.

This document contains information that is proprietary to MediaTek Inc.
Unauthorized reproduction or disclosure of this information in whole or in part is strictly prohibited.

5	**IMM5**	IMM5	**Channel 5 immediate mode** 0: The channel is not selected. 1: The channel is selected.
4	**IMM4**	IMM4	**Channel 4 immediate mode** 0: The channel is not selected. 1: The channel is selected.
3	**IMM3**	IMM3	**Channel 3 immediate mode** 0: The channel is not selected. 1: The channel is selected.
2	**IMM2**	IMM2	**Channel 2 immediate mode** 0: The channel is not selected. 1: The channel is selected.
1	**IMM1**	IMM1	**Channel 1 immediate mode** 0: The channel is not selected. 1: The channel is selected.
0	**IMM0**	IMM0	**Channel 0 immediate mode** 0: The channel is not selected. 1: The channel is selected.

A079000C **AUXADC_CON3** AuxiliaryADC Control Register 3 — 0010

Bit	15	14	13	12	11	10	9	8	7	6	5	4	3	2	1	0
Name	**AUTOSET**				**RSV**		**AUTOCLR1**		**SOFT_RST**			**BYPASS_SLP_ZCV_TRIGGER**				**AUXADC_STA**
Type	R/W				R/W		R/W		R/W			R/W				RO
Reset	0				0		0		0			1				0

Bit(s)	Mnemonic	Name	Description
15	**AUTOSET**	AUTOSET	**Defines the auto-sample mode of the module. In auto-sample mode, each channel with its sample register being read can start sampling immediately without configuring the control register AUXADC_CON1 again.**
11	**RSV**	RSV	**Please keep 1'b0**
9	**AUTOCLR1**	AUTOCLR1	**Defines the auto-clear mode of the module for event 1. In the auto-clear mode, each timer-triggered channel acquires samples of specified channels once the SYNn bit in register AUXADC_CON0 is set. The SYNn bits are automatically cleared and the channel is not enabled again by the timer event except when the SYNn flags are set again.** 0: The automatic clear mode is not enabled. 1: The automatic clear mode is enabled.
7	**SOFT_RST**	SOFT_RST	**Software reset AUXADC state machine** 0: Normal function 1: Reset AUXADC state machine
4	**BYPASS_SLP_ZCV_TRIGGER**	BYPASS_SLP_ZCV_TRIGGER	**Bypass zcv triggering after sleep mode setting** 0: trigger zcv measuring after sleep mode 1: bypass zcv measuring trigger after sleep mode
0	**AUXADC_STA**	AUXADC_STA	**Defines the state of the module** 0: This module is idle. 1: This module is busy.

A0790010 **AUXADC_DAT0** AuxiliaryADC Channel 0 Register (VBAT) — 0000

Bit	15	14	13	12	11	10	9	8	7	6	5	4	3	2	1	0
Name							**DAT0**									
Type							RO									

This document contains information that is proprietary to MediaTek Inc.
Unauthorized reproduction or disclosure of this information in whole or in part is strictly prohibited.

Reset							0	0	0	0	0	0	0	0	0	0

Bit(s)	Mnemonic	Name	Description
9:0	**DAT0**	DAT0	**Sampled data for channel0**

A0790014 AUXADC_DAT1 AuxiliaryADC Channel 1 Register (ISENSE) 0000

Bit	15	14	13	12	11	10	9	8	7	6	5	4	3	2	1	0
Name							**DAT1**									
Type							RO									
Reset							0	0	0	0	0	0	0	0	0	0

Bit(s)	Mnemonic	Name	Description
9:0	**DAT1**	DAT1	**Sampled data for channel1**

A0790018 AUXADC_DAT2 AuxiliaryADC Channel 2 Register (CHRIN) 0000

Bit	15	14	13	12	11	10	9	8	7	6	5	4	3	2	1	0
Name							**DAT2**									
Type							RO									
Reset							0	0	0	0	0	0	0	0	0	0

Bit(s)	Mnemonic	Name	Description
9:0	**DAT2**	DAT2	**Sampled data for channel2**

A079001C AUXADC_DAT3 AuxiliaryADC Channel 3 Register (VBATTMP) 0000

Bit	15	14	13	12	11	10	9	8	7	6	5	4	3	2	1	0
Name							**DAT3**									
Type							RO									
Reset							0	0	0	0	0	0	0	0	0	0

Bit(s)	Mnemonic	Name	Description
9:0	**DAT3**	DAT3	**Sampled data for channel3**

A0790020 AUXADC_DAT4 AuxiliaryADC Channel 4 Register (External) 0000

Bit	15	14	13	12	11	10	9	8	7	6	5	4	3	2	1	0
Name							**DAT4**									
Type							RO									
Reset							0	0	0	0	0	0	0	0	0	0

Bit(s)	Mnemonic	Name	Description
9:0	**DAT4**	DAT4	**Sampled data for channel4**

A0790024 AUXADC_DAT5 AuxiliaryADC Channel 5 Register (External/ACCDET) 0000

Bit	15	14	13	12	11	10	9	8	7	6	5	4	3	2	1	0
Name							**DAT5**									
Type							RO									
Reset							0	0	0	0	0	0	0	0	0	0

This document contains information that is proprietary to MediaTek Inc.
Unauthorized reproduction or disclosure of this information in whole or in part is strictly prohibited.
MEDIATEK CONFIDENTIAL FOR dengzhenli@far-sightedmobile.com USE ONLY

Bit(s)	Mnemonic	Name	Description
9:0	**DAT5**	DAT5	**Sampled data for channel5**

A0790034 **AUXADC_DAT9 AuxiliaryADC Channel 9 Register (ClassAB)** **0000**

Bit	15	14	13	12	11	10	9	8	7	6	5	4	3	2	1	0
Name							**DAT9**									
Type							RO									
Reset							0	0	0	0	0	0	0	0	0	0

Bit(s)	Mnemonic	Name	Description
9:0	**DAT9**	DAT9	**Sampled data for channel9**

A0790040 **AUXADC_DAT12 AuxiliaryADC Channel 12 Register (External)** **0000**

Bit	15	14	13	12	11	10	9	8	7	6	5	4	3	2	1	0
Name							**DAT12**									
Type							RO									
Reset							0	0	0	0	0	0	0	0	0	0

Bit(s)	Mnemonic	Name	Description
9:0	**DAT12**	DAT12	**Sampled data for channel12**

A0790044 **AUXADC_DAT13 AuxiliaryADC Channel 13 Register (External)** **0000**

Bit	15	14	13	12	11	10	9	8	7	6	5	4	3	2	1	0
Name							**DAT13**									
Type							RO									
Reset							0	0	0	0	0	0	0	0	0	0

Bit(s)	Mnemonic	Name	Description
9:0	**DAT13**	DAT13	**Sampled data for channel13**

A0790048 **AUXADC_DAT14 AuxiliaryADC Channel 14 Register (External)** **0000**

Bit	15	14	13	12	11	10	9	8	7	6	5	4	3	2	1	0
Name							**DAT14**									
Type							RO									
Reset							0	0	0	0	0	0	0	0	0	0

Bit(s)	Mnemonic	Name	Description
9:0	**DAT14**	DAT14	**Sampled data for channel14**

A079004C **AUXADC_DAT15 AuxiliaryADC Channel 15 Register (External)** **0000**

MEDIATEK CONFIDENTIAL FOR dengzhen@far-sightedmobile.com USE ONLY

This document contains information that is proprietary to MediaTek Inc.
Unauthorized reproduction or disclosure of this information in whole or in part is strictly prohibited.

Bit	15	14	13	12	11	10	9	8	7	6	5	4	3	2	1	0
Name							DAT15									
Type							RO									
Reset							0	0	0	0	0	0	0	0	0	0

Bit(s)	Mnemonic	Name	Description
9:0	**DAT15**	DAT15	**Sampled data for channel15**

A0790054 AUX_TS_CMD0 Touch Screen Sample Command 0 0000

Bit	15	14	13	12	11	10	9	8	7	6	5	4	3	2	1	0
Name	TS_SPL	TS_MAGIC_KEY								ADDRESS			MODE	SEDF	PD	
Type	R/W	WO								R/W			R/W	R/W	R/W	
Reset	0	0	0	0	0	0	0	0	0	0	0	0	0	0	0	0

Bit(s)	Mnemonic	Name	Description
15	**TS_SPL**	TS_SPL	**Touch screen sample trigger** For the touch screen status, please refer to PMU datasheet : "AUX_CON6" register bit 14 "ts_status" 0: No action 1: When software writes 1'b1, AUXADC will trigger the touch screen process. After the sampling process of touch screen is finished, this bit will be disserted.
14:7	**TS_MAGIC_KEY**	TS_MAGIC_KEY	**The TS commands in AUX_TS_CMD0 can only take effect when the TS_MAGIC_KEY matches the correct value.** TS_MAGIC_KEY=0xaa .
6:4	**ADDRESS**	ADDRESS	**Defines which x or y or z data will be sampled** 001: Y position 011: Z1 position 100: Z2 position 101: X position Others: Reserved
3	**MODE**	MODE	**Selects sample resolution** 0: 10-bit 1: 8-bit
2	**SEDF**	SEDF	**Selects mode** 0: Differential mode 1: Single-end mode
1:0	**PD**	PD	**Power-down control for analog IRQ signal and touch screen sample control signal** 00: Turn on Y-_drive signal and PDN_sh_ref 01: Turn on PDN_IRQ and PDN_sh_ref 10: Reserved 11: Turn on PDN_IRQ

A0790058 AUX_TS_CON Touch Screen Control 0000

Bit	15	14	13	12	11	10	9	8	7	6	5	4	3	2	1	0
Name																TS_SPL
Type																R/W
Reset																0

Bit(s)	Mnemonic	Name	Description
0	**TS_SPL**	TS_SPL	**Touch screen sample trigger**

This document contains information that is proprietary to MediaTek Inc.
Unauthorized reproduction or disclosure of this information in whole or in part is strictly prohibited.
MEDIATEK CONFIDENTIAL FOR dengzhenli@ farsightmobile.com USE ONLY

			For the touch screen status, please refer to PMU datasheet : "AUX_CON6" register bit 14 "ts_status" 0: No action 1: When software writes 1'b1, AUXADC will trigger the touch screen process. After the sampling process of touch screen is finished, this bit will be disserted.

A079005C AUX_TS_DAT0 Touch Screen Sample DATA 0 0000

Bit	15	14	13	12	11	10	9	8	7	6	5	4	3	2	1	0
Name	TS_SPL						TS_DAT									
Type	RO						RO									
Reset	0						0	0	0	0	0	0	0	0	0	0

Bit(s)	Mnemonic	Name	Description
15	**TS_SPL**	TS_SPL	**Touch screen sample trigger** For the touch screen status, please refer to PMU datasheet : "AUX_CON6" register bit 14 "ts_status"
9:0	**TS_DAT**	TS_DAT	**Touch screen sample result data**

A0790070 AUXADC_DAT_ZCV AuxiliaryADC ZCV Sample DATA 0000

Bit	15	14	13	12	11	10	9	8	7	6	5	4	3	2	1	0
Name							DAT_ZCV									
Type							RO									
Reset							0	0	0	0	0	0	0	0	0	0

Bit(s)	Mnemonic	Name	Description
9:0	**DAT_ZCV**	DAT_ZCV	**Sampled data for ZCV**

A07900D0 AUXADC_CON4 AuxiliaryADC Control Register 4 0000

Bit	15	14	13	12	11	10	9	8	7	6	5	4	3	2	1	0
Name	TS_SPL	AUXADC_STA					SYN9				SYN5	SYN4	SYN3	SYN2	SYN1	SYN0
Type	RO	RO					RO				RO	RO	RO	RO	RO	RO
Reset	0	0					0				0	0	0	0	0	0

Bit(s)	Mnemonic	Name	Description
15	**TS_SPL**	TS_SPL	**Touch screen sample trigger** For the touch screen status, please refer to PMU datasheet : "AUX_CON6" register bit 14 "ts_status" 0: No action 1: When software writes 1'b1, AUXADC will trigger the touch screen process. After the sampling process of touch screen is finished, this bit will be disserted.
14	**AUXADC_STA**	AUXADC_STA	**Defines the state of the module** 0: This module is idle. 1: This module is busy.
9	**SYN9**	SYN9	**Channel 9 sync mode** 0: The channel is not selected. 1: The channel is selected.

This document contains information that is proprietary to MediaTek Inc.
Unauthorized reproduction or disclosure of this information in whole or in part is strictly prohibited.
MEDIATEK CONFIDENTIAL, FOR dengzhenli@far-sightedmobile.com USE ONLY

Bit(s)	Mnemonic	Name	Description
5	**SYN5**	SYN5	**Channel 5 sync mode** 0: The channel is not selected. 1: The channel is selected.
4	**SYN4**	SYN4	**Channel 4 sync mode** 0: The channel is not selected. 1: The channel is selected.
3	**SYN3**	SYN3	**Channel 3 sync mode** 0: The channel is not selected. 1: The channel is selected.
2	**SYN2**	SYN2	**Channel 2 sync mode** 0: The channel is not selected. 1: The channel is selected.
1	**SYN1**	SYN1	**Channel 1 sync mode** 0: The channel is not selected. 1: The channel is selected.
0	**SYN0**	SYN0	**Channel 0 sync mode** 0: The channel is not selected. 1: The channel is selected.

A07900D4 AUX_TS_CMD1 Touch Screen Sample Command 1 0000

Bit	15	14	13	12	11	10	9	8	7	6	5	4	3	2	1	0
Name										ADDRESS			MODE	SEDF	PD	
Type										R/W			R/W	R/W	R/W	
Reset										0	0	0	0	0	0	0

Bit(s)	Mnemonic	Name	Description
6:4	**ADDRESS**	ADDRESS	**Defines which x or y or z data will be sampled** 001: Y position 011: Z1 position 100: Z2 position 101: X position Others: Reserved
3	**MODE**	MODE	**Selects sample resolution** 0: 10-bit 1: 8-bit
2	**SEDF**	SEDF	**Selects mode** 0: Differential mode 1: Single-end mode
1:0	**PD**	PD	**Power-down control for analog IRQ signal and touch screen sample control signal** 00: Turn on Y-_drive signal and PDN_sh_ref 01: Turn on PDN_IRQ and PDN_sh_ref 10: Reserved 11: Turn on PDN_IRQ

A07900D8 AUX_TS_DAT1 Touch Screen Sample DATA 1 0000

Bit	15	14	13	12	11	10	9	8	7	6	5	4	3	2	1	0
Name							TS_DAT									
Type							RO									
Reset							0	0	0	0	0	0	0	0	0	0

Bit(s)	Mnemonic	Name	Description
9:0	**TS_DAT**	TS_DAT	**Touch screen sample result data**

This document contains information that is proprietary to MediaTek Inc.
Unauthorized reproduction or disclosure of this information in whole or in part is strictly prohibited.
MEDIATEK CONFIDENTIAL FOR dengzhenli@ farsightedmobile.com USE ONLY

※ Please refer to ***"PMU"*** datasheet for other AuxADC related settings:

- Sampling cycle control: Please see "AUX_CON4" and "AUX_CON5"

3.13.2 General Programming Guide

All register writes will occur in sequence. However, due to synchronization time, any reads after writes need to be delayed by three dummy reads.

3.13.3 Usage Programming Guide

There are two modes to program the AUXADC to sample: immediate mode and synchronous mode. The following are notes on programming each mode:

Immediate mode sampling is accomplished by programming AUXADC_CON1 with the channels to be sampled. After programming, it is necessary to perform three dummy reads on AUXADC_CON3. After the dummy reads, the next read of AUXADC_CON3 will be valid. After sampling is done, it is necessary to program AUXADC_CON1 back to zero before sampling again.

Synchronous mode sampling is accomplished by programming AUXADC_CON0 with the channels to be sampled. Then it is necessary to program TDMA_EVTENA7 to 0x2. After the sample is done, TDMA_EVTENA7 must be programmed to 0x0 with waiting of two frames before sampling again.

3.13.4 Performance Programming Guide

For details on adjusting the performance of ADC sampling, please refer to registers AUX_CON4, AUX_CON5 and AUX_CON6 in the ***PMU*** datasheet.

3.13.5 AUXADC PDN

AUXADC is located in A-die. Due to limitation, one of UART1,2,3 clocks must be turned on in order to use AUXADC. Please clear the corresponding PDN bits to enable the AUXADC clock (bit 2 or 3 of ACFG_CLK_CG).

3.13.6 Notice

The 4 TP pins – PAD_XP, PAD_XM, PAD_YP, PAD_YM, are used as EINT pins when no R-touch is used in the system. Therefore, please make sure the pin settings are correct.

This document contains information that is proprietary to MediaTek Inc.
Unauthorized reproduction or disclosure of this information in whole or in part is strictly prohibited.
MEDIATEK CONFIDENTIAL FOR dengzhenjia@far-sightedmobile.com USE ONLY

3.14 USB Device Controller

3.14.1 General Description

This chip provides a USB function interface which complies with Universal Serial Bus Specification Rev 1.1. The USB device controller supports only full-speed (12Mbps) operation. The chip can make use of this widely available USB interface to transmit/receive data with USB hosts, typically PC/laptop.

There are 6 endpoints in the USB device controller besides the mandatory control endpoint, 4 of which are for IN transactions and 2 endpoints are for OUT transactions. Word, half-word, and byte access are all allowed for loading and unloading the FIFO. The controller features 4 DMA channels to accelerate the data transfer for ACL and SCO data streams. The features of the endpoints are:

1. Endpoint 0: The control endpoint feature 64 bytes FIFO and accommodates maximum packet size of up to 64 bytes. DMA transfer is not supported.
2. IN endpoint 1: It features 64 bytes FIFO and accommodates maximum packet size of up to 64 bytes. GDMA Channel 4 Write Transfer is supported.
3. IN endpoint 2: It features 64 bytes FIFO and accommodates maximum packet size of up to 64 bytes. GDMA Channel 6 Write Transfer is supported.
4. IN endpoint 3: It features 16-byte FIFO and accommodates maximum packet size of 16 bytes. GDMA Transfer is not supported.
5. IN endpoint 4: It features 16-byte FIFO and accommodates maximum packet size of 16 bytes. GDMA Transfer is not supported.
6. OUT endpoint 1: It features 64 bytes FIFO and accommodates maximum packet size of 64 bytes. GDMA Channel 5 Read Transfer is supported.
7. OUT endpoint 2: It features 64 bytes FIFO and accommodates maximum packet size of 64 bytes. GDMA Channel 7 Read Transfer is supported.

For each endpoint except for the control endpoint, when the packet size is smaller than half the size of the FIFO, at most 2 packets can be buffered.

This unit is highly software configurable. All endpoints except for the control endpoint can be configured to be a bulk, interrupt or isochronous endpoints. Composite devices are also supported. IN

MEDIATEK CONFIDENTIAL FOR dengzhenli@far-sightedmobile.com USE ONLY

This document contains information that is proprietary to MediaTek Inc.
Unauthorized reproduction or disclosure of this information in whole or in part is strictly prohibited.

endpoint 1 and OUT endpoint 1 share the same endpoint number but they can be used separately. So is the situation for the endpoint 2.

The USB device uses the cable-powered feature for the transceiver but only drains little current. An internal pull-up resistor is integrated across Vbus and D+ signal. The switch on/off of the pull-up resistor can be configured through the internal register. Two additional external serial resistors might be needed to place on the output of D+ and D- signals to make the output impedance equivalent to 28~44Ohm.

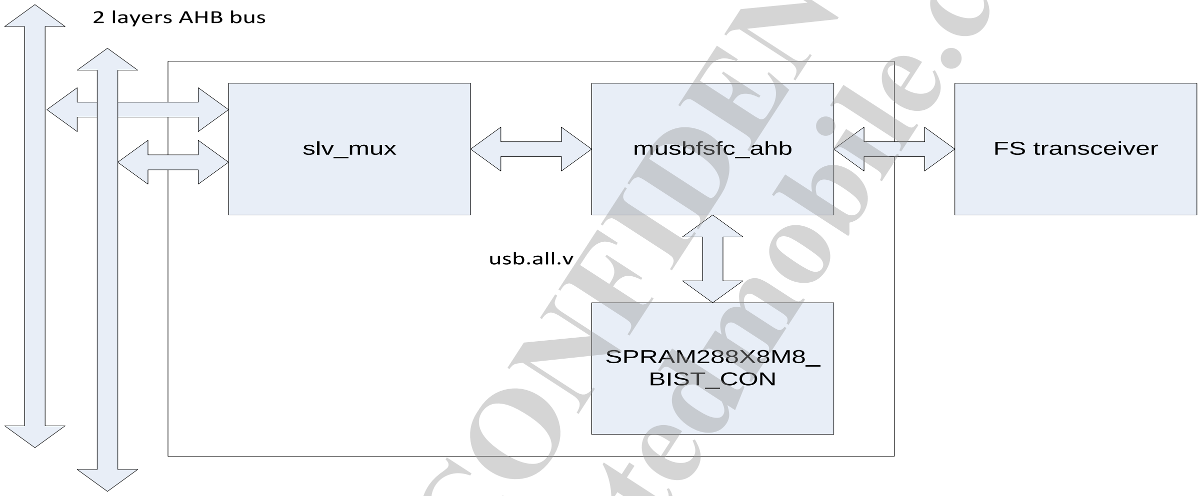

Figure 41. USB11 controller system diagram

3.14.2 Terminology

RW: Writable, Readable.
RO: Read-only. Value never changes.
WO: Write-only.
W1: Write-once. Readable.
RU: Read-only but value updated by the design.
W1C: Readable. Write 1 to bitwise-clear.
RC: Clear on read.
A1: Auto-set by the design. Can be read and write 0 to clear.
A0: Auto-cleared by the design. Can be read and write 1 to set.
DC: Don't care.
OTHER: Others. Mixed attribute. Refer to bit description.
RSV: Reserved. The read/write behavior to this bit is undefined.

3.14.3 Register Definition

00 USB_FADDR USB Function Address Register 00

Bit	15	14	13	12	11	10	9	8	7	6	5	4	3	2	1	0

This document contains information that is proprietary to MediaTek Inc.
Unauthorized reproduction or disclosure of this information in whole or in part is strictly prohibited.
MEDIATEK CONFIDENTIAL FOR dengzhenli@far-sightemobile.com USE ONLY

Name									**UPD**	**FADDR**						
Type									RW	RW						
Reset									0	0	0	0	0	0	0	0

Bit(s)	Name	Description
7	UPD	**This is an 8bit register that should be written with the functions 7-bit address (received through a SET_ADDRESS description). It is then used for decoding the function address in subsequent token packets.** When set by the MCU, the core will wait for an SOF token from the time INPKTRDY is set before sending the packet
6:0	FADDR	**Function address of device**

01 **USB_POWER** **USB Power Control Register** **00**

Bit	15	14	13	12	11	10	9	8	7	6	5	4	3	2	1	0
Name									**ISOUPDATE**			**SWRSTENAB**	**RESET**	**RESUME**	**SUSPMODE**	**SUSPENAB**
Type									RW			RU	RU	RW	RU	RW
Reset									0			0	0	0	0	0

Bit(s)	Name	Description
7	ISOUPDATE	When set by the MCU, the core will wait for an SOF token from the time INPKTRDY is set before sending the packet
4	SWRSTENAB	**Set by the MCU to enable the mode in which the device can only be reset by the software after reset signals are detected on the bus.** In case the software is delayed by other high priority processes and cannot make it to read the command from the buffer before the hardware reset the device after the reset signal is detected on the bus, the command will be lost. That is why the software reset mode is effective. When the flag is enabled, the hardware state machine cannot reset itself but by the software. In that sense, the software and hardware can keep synchronous detecting the reset signal.
3	RESET	**The read-only bit is set when Reset signaling is present on the bus**
2	RESUME	**Set by the MCU to generate Resume signaling when the function is in the suspend mode.** The MCU should clear this bit after 10ms (maximum 15ms) to end Resume signaling
1	SUSPMODE	**Set by the USB core when the Suspend mode is entered** Cleared when the Resume bit of this register is set.
0	SUSPENAB	**Set by the MCU to enable device into the Suspend mode when Suspend signaling is received on the bus**

0002 **USB_INTRIN** **USB IN Endpoints Interrupt Register** **0000**

Bit	15	14	13	12	11	10	9	8	7	6	5	4	3	2	1	0
Name												**EP4_IN**	**EP3_IN**	**EP2_IN**	**EP1_IN**	**EP0**
Type												RC	RC	RC	RC	RC
Reset												0	0	0	0	0

Bit(s)	Name	Description

This document contains information that is proprietary to MediaTek Inc.
Unauthorized reproduction or disclosure of this information in whole or in part is strictly prohibited.

Bit(s)	Name	Description
4	EP4_IN	IN Endpoint 4 interrupt event
3	EP3_IN	IN Endpoint 3 interrupt event
2	EP2_IN	IN Endpoint 2 interrupt event
1	EP1_IN	IN Endpoint 1 interrupt event
0	EP0	Endpoint 0 interrupt event

0004 USB_INTROUT USB OUT Endpoints InterruptRegister 0000

Bit	15	14	13	12	11	10	9	8	7	6	5	4	3	2	1	0
Name														EP2_OUT	EP1_OUT	
Type														RC	RC	
Reset														0	0	

Bit(s)	Name	Description
2	EP2_OUT	OUT Endpoint 2 interrupt event
1	EP1_OUT	OUT Endpoint 1 interrupt event

06 USB_INTRUSB USB General Interrupt Register 00

Bit	15	14	13	12	11	10	9	8	7	6	5	4	3	2	1	0
Name												POWERDWN	SOF	RESET	RESUME	SUSPEND
Type												RC	RC	RC	RC	RC
Reset												0	0	0	0	0

Bit(s)	Name	Description
4	POWERDWN	**Set at SUSPMODE and LineState is JState.** The programmer should have de bounce scheme in SW code when using this interrupt.
3	SOF	**Set at the start of each frame**
2	RESET	**Set when Reset signaling is detected on the bus**
1	RESUME	**Set when Resume signaling is detected on the bus while the USB core is in suspend mode**
0	SUSPEND	**Set when Suspend signaling is detected on the bus**

0007 USB_INTRINE USB IN Endpoints Interrupt Enable Register 00FF

Bit	15	14	13	12	11	10	9	8	7	6	5	4	3	2	1	0
Name												EP4_INE	EP3_INE	EP2_INE	EP1_INE	EP0_E
Type												RW	RW	RW	RW	RW
Reset												1	1	1	1	1

Bit(s)	Name	Description
4	EP4_INE	1b0: Disable IN Endpoint 4 interrupt event 1b1: Enable IN Endpoint 4 interrupt event

This document contains information that is proprietary to MediaTek Inc.
Unauthorized reproduction or disclosure of this information in whole or in part is strictly prohibited.
MEDIATEK CONFIDENTIAL FOR dengzhenli@far-sightedmobile.com USE ONLY

Bit(s)	Name	Description
3	EP3_INE	1b0: Disable IN Endpoint 3 interrupt event 1b1: Enable IN Endpoint 3 interrupt event
2	EP2_INE	1b0: Disable IN Endpoint 2 interrupt event 1b1: Enable IN Endpoint 2 interrupt event
1	EP1_INE	1b0: Disable IN Endpoint 1 interrupt event 1b1: Enable IN Endpoint 1 interrupt event
0	EP0_E	1b0: Disable IN Endpoint 0 interrupt event 1b1: Enable IN Endpoint 0 interrupt event

0009 USB_INTROUTE USB OUT Endpoints Interrupt Enable Register 00FE

Bit	15	14	13	12	11	10	9	8	7	6	5	4	3	2	1	0
Name														EP2_OUTE	EP1_OUTE	
Type														RW	RW	
Reset														1	1	

Bit(s)	Name	Description
2	EP2_OUTE	1b0: Disable OUT Endpoint 2 interrupt event 1b1: Enable OUT Endpoint 2 interrupt event
1	EP1_OUTE	1b0: Disable OUT Endpoint 1 interrupt event 1b1: Enable OUT Endpoint 1 interrupt event

0B INTRUSBE USB General Interrupt Enable Register 06

Bit	15	14	13	12	11	10	9	8	7	6	5	4	3	2	1	0
Name												POWERDWN_E	SOF_E	RESET_E	RESEUM_E	SUSPEND_E
Type												RW	RW	RW	RW	RW
Reset												0	0	1	1	0

Bit(s)	Name	Description
4	POWERDWN_E	Enables power-down interrupt
3	SOF_E	Enables SOF interrupt
2	RESET_E	Enables reset/babble interrupt
1	RESEUM_E	Enables resume interrupt
0	SUSPEND_E	Enables suspend interrupt

0C USB_FRAME1 USB Frame Count #1 Register 00

Bit	15	14	13	12	11	10	9	8	7	6	5	4	3	2	1	0
Name									NUML							
Type									RU							
Reset									0	0	0	0	0	0	0	0

Bit(s)	Name	Description

This document contains information that is proprietary to MediaTek Inc.
Unauthorized reproduction or disclosure of this information in whole or in part is strictly prohibited.
MEDIATEK CONFIDENTIAL FOR dengzhenli@far-sightmobile.com USE ONLY

Bit(s)	Name	Description
7:0	NUML	The lower 8 bits of the frame number

0D USB_FRAME2 USB Frame Count #2 Register 00

Bit	15	14	13	12	11	10	9	8	7	6	5	4	3	2	1	0
Name														NUMH		
Type														RU		
Reset														0	0	0

Bit(s)	Name	Description
2:0	NUMH	The upper 3 bits of the frame number

0E USB_INDEX USB Endpoint Register Index 00

Bit	15	14	13	12	11	10	9	8	7	6	5	4	3	2	1	0
Name													INDEX			
Type													RW			
Reset													0	0	0	0

The register determines which endpoint control/status registers are to be accessed at addresses USB+10h to USB+17h. Each IN endpoint and OUT endpoint has its own set of control/status registers. Only one set of IN control/status and one set of OUT control/status registers appear in the memory map at a time. Before accessing the control/status registers of an endpoint, the endpoint number should be written to the USB_INDEX register to ensure that the correct control/status registers appear in the memory map.

Bit(s)	Name	Description
3:0	INDEX	Index of the endpoint

0F USB_RSTCTRL USB Reset Control 00

Bit	15	14	13	12	11	10	9	8	7	6	5	4	3	2	1	0
Name									SWRST				RSTCNTR			
Type									RW				RW			
Reset									0				0	0	0	0

Bit(s)	Name	Description
7	SWRST	If the flag SWRSTENAB in register USB_POWER is set to 1, the software enable mode will be enabled, and the device can be reset by writing 1 to this flag.
3:0	RSTCNTR	Signifies the duration of the reset operation after reset signal is detected on the bus. It is only enabled when software reset is not enabled. If the value is 0, the duration will be 2.5us. Otherwise, the duration will be this value multiplied by 341 then added by 2.5 in us unit. The range consequently starts from 2.5us to 5122.5us.

This document contains information that is proprietary to MediaTek Inc.
Unauthorized reproduction or disclosure of this information in whole or in part is strictly prohibited.
MEDIATEK CONFIDENTIAL FOR dengzhenli@far-sightedmobile.com USE ONLY

11 **USB_EP0_CSR** **USB Control/Status Register for Endpoint 0** **00**

Bit	15	14	13	12	11	10	9	8	7	6	5	4	3	2	1	0
Name									SSETUPEND	SOUTPKTRDY	SENDSTALL	SETUPEND	DATAEND	SENTSTALL	INPKTRDY	OUTPKTRDY
Type									A0	A0	A0	RU	A0	A1	A0	RU
Reset									0	0	0	0	0	0	0	0

Bit(s)	Name	Description
7	SSETUPEND	**The MCU writes 1 to this bit to clear the SETUPEND bit.** It is cleared automatically. Only active when a transaction is started.
6	SOUTPKTRDY	**The MCU writes 1 to this bit to clear the OUTPKTRDY bit.** It is cleared automatically. Only active when an OUT transaction is started
5	SENDSTALL	**The MCU writes 1 to this bit to terminate the current transaction.** The STALL handshake will be transmitted, and this bit will be cleared automatically.
4	SETUPEND	**This bit will be set when a control transaction ends before the DATAEND bit is set.** An interrupt will be generated and FIFO flushed at this time. The bit is cleared by the MCU writing 1 to the SSETUPEND bit.
3	DATAEND	**The MCU sets this bit:** 1. When setting INPKTRDY for the last data packet. 2. When clearing OUTPKTRDY after unloading the last data packet. 3. When setting INPKTRDY for a zero length data packet. It is cleared automatically.
2	SENTSTALL	**This bit is set when a STALL handshake is transmitted.** The MCU should clear this bit by writing 0 to it.
1	INPKTRDY	**The MCU sets up this bit after loading a data packet into the FIFO.** It is cleared automatically when the data packet is transmitted. An interrupt is generated when this bit is set
0	OUTPKTRDY	**This bit is set when a data packet is received.** An interrupt is generated when this bit is set. The MCU clears this bit by setting up the SOUTPKTRDY bit.

16 **USB_EP0_COUNT** **EP0 Received Bytes Count Register** **00**

Bit	15	14	13	12	11	10	9	8	7	6	5	4	3	2	1	0
Name										EP0_COUNT						
Type										RU						
Reset										0	0	0	0	0	0	0

The register indicates the number of received data bytes in the endpoint 0. The value returned is valid while the OUTPKTRDY bit of the USB_EP0_CSR register is set. The register is active when the USB_INDEX register is set to 0.

Bit(s)	Name	Description
6:0	EP0_COUNT	Number of received data bytes in the endpoint 0

This document contains information that is proprietary to MediaTek Inc.
Unauthorized reproduction or disclosure of this information in whole or in part is strictly prohibited.
MEDIATEK CONFIDENTIAL FOR dengzhenli@fartslinemobile.com USE ONLY

10 USB_EP_INMAXP USB Maximum Packet Size Register for IN Endpoint 00

Bit	15	14	13	12	11	10	9	8	7	6	5	4	3	2	1	0
Name									MAXP							
Type									RW							
Reset									0	0	0	0	0	0	0	0

The register holds the maximum packet size for transactions through the currently selected IN endpoint - in units of one byte. When setting up the value, the programmer should note the constraints placed by the USB Specification on the packet size for bulk interrupt and isochronous transactions in full speed operation. There is an INMAXP register for each IN endpoint except for endpoint 0. The registers are active when the USB_INDEX register is set to 1, 2, 3, and 4 respectively.

The value written to this register should match the wMaxPacketSize field of the standard endpoint descriptor for the associated endpoint. A mismatch may cause unexpected results. If a value is bigger than the configured IN FIFO size for the endpoint written to the register, the value will be automatically changed to the IN FIFO size. If the value written to the register is smaller than or equal to half the IN FIFO size, two IN packets can be buffered. The configured IN FIFO size for the endpoint 1, 2, and 3, are 16 bytes, 64 bytes, and 64 bytes respectively.

The register is reset to 0. If the register is changed after the packets are sent from the endpoint, the endpoint IN FIFO should be completely flushed after writing the new value to the register.

Bit(s)	Name	Description
7:0	MAXP	Maximum packet size (unit: byte)

11 USB_EP_INCSR1 USB Control/Status Register #1 for IN Endpoint 00

Bit	15	14	13	12	11	10	9	8	7	6	5	4	3	2	1	0
Name									ABORTPKT_EN	CLRDATATOG	SENTSTALL	SENDSTALL	FLUSHFIFO	UNDERRUN	FIFONOTEMPTY	INPKTRDY
Type									RW	A0	A1	RW	A0	A1	RU	A0
Reset									0	0	0	0	0	0	0	0

Bit(s)	Name	Description
7	ABORTPKT_EN	When MCU writes 1 to ABORTPKT_EN, FLUSHFIFO switches to abort the packet function. This bit should be enabled before FLUSHFIFO is set. If FLUSHFIFO is set and ABORTPKT_EN is enabled the data loaded into FIFO will be discarded. After the packet is aborted, EP will issue an interrupt. The programmer should wait for this interrupt to make sure the packet is aborted
6	CLRDATATOG	The MCU writes 1 to this bit to reset the endpoint IN data toggle to 0
5	SENTSTALL	The bit is set when a STALL handshake is transmitted. The FIFO is flushed and the INPKTRDY bit is cleared. The MCU should clear this bit by writing 0 to this bit.
4	SENDSTALL	The MCU writes 1 to this bit to issue a STALL handshake to an IN token. The MCU clears this bit to terminate the stall condition
3	FLUSHFIFO	The MCU writes 1 to this bit to flush the next packet to be transmitted from the endpoint IN FIFO. The FIFO pointer is reset and the INPKTRDY bit is cleared. If the FIFO contains two packets, FLUSHFIFO will need to be set twice to

This document contains information that is proprietary to MediaTek Inc.
Unauthorized reproduction or disclosure of this information in whole or in part is strictly prohibited.

Bit(s)	Name	Description
		completely clear the FIFO. FLUSHFIFO should only be used when INPKTRDY is set. At other times, it may cause data corruption. If ABORTPKT_EN is enabled and this bit is set , the function of this bit will become ABORTPKT to abort the next packet to be transmitted from the endpoint IN FIFO and does not need to set INPKTRDY. It is the same with the FLUSHFIFO function. This bit is only active when the endpoint is idle.
2	UNDERRUN	In isochronous mode, this bit is set when a zero length data packet is sent after receiving an IN token with the INPKTRDY bit not set. In Bulk/Interrupt mode, this bit is set when a NAK is returned in response to an IN token. The MCU should clear this bit by writing a 0 to this bit
1	FIFONOTEMPTY	This bit is set when there is at least 1 packet in the IN FIFO
0	INPKTRDY	The MCU sets up this bit after loading a data packet into the FIFO. Only active when an IN transaction is started. It is cleared automatically when a data packet is transmitted. An interrupt will be generated (if enabled) when the bit is cleared

12 **USB_EP_INCSR2** **USB Control/Status Register #2 for IN Endpoint** **00**

Bit	15	14	13	12	11	10	9	8	7	6	5	4	3	2	1	0
Name									AUTOSET	ISO	MODE	DMAENAB	FRCDATATOG			
Type									RW	RW	RW	RW	RW			
Reset									0	0	0	0	0			

Bit(s)	Name	Description
7	AUTOSET	If the MCU sets up the bit, INPKTRDY will be automatically set when the data of the maximum packet size (value in INMAXP) is loaded into the IN FIFO. If a packet of smaller than the maximum packet size is loaded, INPKTRDY will have to be set manually. When 2 packets are in the IN FIFO, INPKTRDY will also be automatically set when the first packet is sent if the second packet is the maximum packet size
6	ISO	The MCU sets up this bit to enable the IN endpoint for isochronous transfer and clears it to enable the IN endpoint for bulk/interrupt transfers
5	MODE	The MCU sets up this bit to enable the endpoint direction as IN and clears it to enable the endpoint direction as OUT. It is valid only when the same endpoint FIFO is used for both IN and OUT transactions.
4	DMAENAB	The MCU sets up this bit to enable the DMA request for the IN endpoint.
3	FRCDATATOG	The MCU sets up this bit to force the endpoints IN data toggle to switch after each data packet is sent regardless of whether an ACK has been received. This can be used by interrupt IN endpoints which are used to communicate rate feedback for isochronous endpoints

13 **USB_EP_OUTMAXP** **USB Maximum Racket Size Register for OUT Endpoint** **00**

Bit	15	14	13	12	11	10	9	8	7	6	5	4	3	2	1	0
Name									MAXP							
Type									RW							
Reset									0	0	0	0	0	0	0	0

This document contains information that is proprietary to MediaTek Inc.
Unauthorized reproduction or disclosure of this information in whole or in part is strictly prohibited.
MEDIATEK CONFIDENTIAL FOR dengzhenli@fareastone.com USE ONLY

This register holds the maximum packet size for transactions through the currently selected OUT endpoint (unit: byte). When setting up this value, the programmer should note the constraints placed by the USB specification on packet sizes for bulk, interrupt, and isochronous transactions in full speed operations. There is an OUTMAXP register for each OUT endpoint except for endpoint 0. The registers are active when the USB_INDEX register is set to 1 and 2 respectively.

The value written to this register should match the wMaxPacketSize field of the standard endpoint descriptor for the associated endpoint. A mismatch may cause unexpected results. The total amount of data represented by the value written to this register must not exceed the FIFO size for the OUT endpoint and should not exceed half the FIFO size if double buffering is required. If a value bigger than the configured OUT FIFO size for the endpoint is written to the register, the value will be automatically changed to the OUT FIFO size. If the value written to the register is smaller than or equal to half the OUT FIFO size, two OUT packets can be buffered. The configured IN FIFO size for the endpoint 1, 2, and 3 are both 16, 64, and 64 bytes, respectively.

Bit(s)	Name	Description
7:0	MAXP	Maximum packet size (unit: byte)

14 USB_EP_OUTCSR1 USB Control/Status Register #1 for OUT Endpoint 00

Bit	15	14	13	12	11	10	9	8	7	6	5	4	3	2	1	0
Name									CLRDTATOG	SENTSTALL	SENDSTALL	FLUSHFIFO	DATAERROR	OVERRUN	FIFOFULL	RXPKTRDY
Type									A0	A1	RW	A0	RU	A1	RU	A1
Reset									0	0	0	0	0	0	0	0

Bit(s)	Name	Description
7	CLRDTATOG	The MCU writes 1 to this bit to reset the endpoint data toggle to 0.
6	SENTSTALL	The bit is set when a STALL handshake is transmitted. The MCU should clear this bit by writing 0 to it.
5	SENDSTALL	The MCU writes 1 to this bit to issue a STALL handshake. The MCU clears this bit to terminate the stall condition. This bit will have no effect if the OUT endpoint is in the isochronous mode
4	FLUSHFIFO	The MCU writes 1 to this bit to flush the next packet to be read from the endpoint OUT FIFO. If the FIFO contains two packets, FLUSHFIFO will need to be set twice to completely clear the FIFO. FLUSHFIFO should only be used when OUTPKTRDY is set. At other times, it may cause data corruption.
3	DATAERROR	The bit is set when OUTPKTRDY is set if the data packet has a CRC or bit stuff error. It is cleared when OUTPKTRDY is cleared. This bit is only valid in the isochronous mode.
2	OVERRUN	The bit will be set if an OUT packet cannot be loaded into the OUT FIFO. The MCU should clear the bit by writing 0 to it. This bit is only valid in the isochronous mode.
1	FIFOFULL	This bit is set when no more packets can be loaded into the OUT FIFO
0	RXPKTRDY	The bit is set when a data packet has been received. The MCU should clear (write 0 to it) the bit when the packet is unloaded from the OUT FIFO. An interrupt will be generated when the bit is set. When the

This document contains information that is proprietary to MediaTek Inc.
Unauthorized reproduction or disclosure of this information in whole or in part is strictly prohibited.
MEDIATEK CONFIDENTIAL USE ONLY
FOR dengzhenli@kar-sightedmobile.com

Bit(s)	Name	Description
		receiving null packet is received, OUTPKTRDY will be set after USB_INTROUT1 is high.

15 **USB_EP_OUTCSR2** **USB Control/Status Register #2 for OUT Endpoint** **00**

Bit	15	14	13	12	11	10	9	8	7	6	5	4	3	2	1	0
Name									AUTOCLEAR	ISO	DMAENAB	DMAMODE				
Type									RW	RW	RW	RW				
Reset									0	0	0	0				

Bit(s)	Name	Description
7	AUTOCLEAR	If the MCU sets up this bit, the OUTPKTRDY bit will be automatically cleared when a packet of OUTMAXP bytes is unloaded from the OUT FIFO. When packets of smaller than the maximum packet size are unloaded, OUTPKTRDY will have to be cleared manually.
6	ISO	The MCU sets up this bit to enable the OUT endpoint for isochronous transfers and clears it to enable the OUT endpoint for bulk/interrupt transfers
5	DMAENAB	The MCU sets up this bit to enable the DMA request for the OUT endpoint
4	DMAMODE	Two modes of DMA operation are supported: DMA mode 0 in which a DMA request is generated for all received packets, together with an interrupt (if enabled). DMA mode 1 in which a DMA request (but no interrupt) is generated for OUT packets of size OUTMAXP bytes and an interrupt (but no DMA request) is generated for OUT packets of any other size. The MCU sets up the bit to select DMA mode 1 and clears this bit to select DMA mode 0.

16 **USB_EP_COUNT1** **USB OUT Endpoint Byte Counter Register LSB Part for Endpoint** **00**

Bit	15	14	13	12	11	10	9	8	7	6	5	4	3	2	1	0
Name									NUML							
Type									RU							
Reset									0	0	0	0	0	0	0	0

The register holds the lower 8 bits of the number of received data bytes in the packet in the FIFO associated with the currently selected OUT endpoint. The value returned is valid while OUTPKTRDY in register USB_OUTCSR1 is set. The registers are active when the USB_INDEX register is set to 1 and 2 respectively.

Bit(s)	Name	Description
7:0	NUML	Lower 8 bits of the number of received data bytes for the OUT endpoint

17 **USB_EP_COUNT2** **USB OUT Endpoint Byte Counter Register MSB Part for Endpoint** **00**

Bit	15	14	13	12	11	10	9	8	7	6	5	4	3	2	1	0
Name														NUMH		
Type														RU		

This document contains information that is proprietary to MediaTek Inc.
Unauthorized reproduction or disclosure of this information in whole or in part is strictly prohibited.

Reset														0	0	0

The register holds the upper 3 bits of the number of received data bytes in the packet in the FIFO associated with the currently selected OUT endpoint. The value returned is valid while OUTPKTRDY in register USB_EP_OUTCSR1 is set. The registers are active when the USB_INDEX register is set to 1 and 2 respectively.

Bit(s)	Name	Description
2:0	NUMH	Upper 8 bits of the number of received data bytes for the OUT endpoint.

20 USB_EP0_FIFO_DB0 USB Endpoint 0 FIFO Register DB0 00

Bit	15	14	13	12	11	10	9	8	7	6	5	4	3	2	1	0
Name									FIFO0_DB0							
Type									Other							
Reset									0	0	0	0	0	0	0	0

The register provides MCU access to the FIFO for the endpoint 0. Writing to this register will load data to the FIFO for the endpoint 0. Reading this register unloads data from the FIFO for the endpoint 0.

The register provides word, half word, and byte mode accesses. If word or half word accesses are performed, the less significant byte will correspond to the prior byte to load to or unload from the FIFO.

Bit(s)	Name	Description
7:0	FIFO0_DB0	The first byte to be loaded to or unloaded from the FIFO.

21 USB_EP0_FIFO_DB1 USB Endpoint 0 FIFO Register DB1 00

Bit	15	14	13	12	11	10	9	8	7	6	5	4	3	2	1	0
Name									FIFO0_DB1							
Type									Other							
Reset									0	0	0	0	0	0	0	0

Bit(s)	Name	Description
7:0	FIFO0_DB1	The second byte to be loaded to or unloaded from the FIFO.

22 USB_EP0_FIFO_DB2 USB Endpoint 0 FIFO Register DB2 00

Bit	15	14	13	12	11	10	9	8	7	6	5	4	3	2	1	0
Name									FIFO0_DB2							
Type									Other							
Reset									0	0	0	0	0	0	0	0

Bit(s)	Name	Description
7:0	FIFO0_DB2	The third byte to be loaded to or unloaded from the FIFO.

This document contains information that is proprietary to MediaTek Inc.
Unauthorized reproduction or disclosure of this information in whole or in part is strictly prohibited.
MEDIATEK CONFIDENTIAL FOR dengzhenli@far-sightedmobile.com USE ONLY

23	USB_EP0_FIFO_DB3	USB Endpoint 0 FIFO Register DB3	00

Bit	15	14	13	12	11	10	9	8	7	6	5	4	3	2	1	0
Name									FIFO0_DB3							
Type									Other							
Reset									0	0	0	0	0	0	0	0

Bit(s)	Name	Description
7:0	FIFO0_DB3	The forth byte to be loaded to or unloaded from the FIFO.

24	USB_EP1_FIFO_DB0	USB Endpoint 1 FIFO Register DB0	00

Bit	15	14	13	12	11	10	9	8	7	6	5	4	3	2	1	0
Name									FIFO1_DB0							
Type									Other							
Reset									0	0	0	0	0	0	0	0

The register provides MCU access to the FIFO for the endpoint 1. Writing to this register will load data to the FIFO for the endpoint 1. Reading this register will unload data from the FIFO for the endpoint 1.

The register provides word, half word, and byte mode accesses. If word or half word accesses are performed, the less significant byte will correspond to the prior byte to load to or unload from the FIFO.

Bit(s)	Name	Description
7:0	FIFO1_DB0	The first byte to be loaded to or unloaded from the FIFO.

25	USB_EP1_FIFO_DB1	USB Endpoint 1 FIFO Register DB1	00

Bit	15	14	13	12	11	10	9	8	7	6	5	4	3	2	1	0
Name									FIFO1_DB1							
Type									Other							
Reset									0	0	0	0	0	0	0	0

Bit(s)	Name	Description
7:0	FIFO1_DB1	The second byte to be loaded to or unloaded from the FIFO.

26	USB_EP1_FIFO_DB2	USB Endpoint 1 FIFO Register DB2	00

Bit	15	14	13	12	11	10	9	8	7	6	5	4	3	2	1	0
Name									FIFO1_DB2							
Type									Other							
Reset									0	0	0	0	0	0	0	0

This document contains information that is proprietary to MediaTek Inc.
Unauthorized reproduction or disclosure of this information in whole or in part is strictly prohibited.
MEDIATEK CONFIDENTIAL FOR dengkeli@far-sightedmobile.com USE ONLY

Bit(s)	Name	Description
7:0	FIFO1_DB2	The third byte to be loaded to or unloaded from the FIFO.

27 **USB_EP1_FIFO_DB3** **USB Endpoint 1 FIFO Register DB3** **00**

Bit	15	14	13	12	11	10	9	8	7	6	5	4	3	2	1	0
Name									FIFO1_DB3							
Type									Other							
Reset									0	0	0	0	0	0	0	0

Bit(s)	Name	Description
7:0	FIFO1_DB3	The forth byte to be loaded to or unloaded from the FIFO.

28 **USB_EP2_FIFO_DB0** **USB Endpoint 2 FIFO Register DB0** **00**

Bit	15	14	13	12	11	10	9	8	7	6	5	4	3	2	1	0
Name									FIFO2_DB0							
Type									Other							
Reset									0	0	0	0	0	0	0	0

The register provides MCU access to the FIFO for the endpoint 2. Writing to this register will load data to the FIFO for the endpoint 2. Reading this register will
unloads data from the FIFO for the endpoint 2.unloads data from the FIFO for the endpoint 2.
The register provides word, half word, and byte mode accesses. If word or half word accesses are performed, the less significant byte will correspond to the prior byte to load to or unload from the FIFO.

Bit(s)	Name	Description
7:0	FIFO2_DB0	The first byte to be loaded to or unloaded from the FIFO.

29 **USB_EP2_FIFO_DB1** **USB Endpoint 2 FIFO Register DB1** **00**

Bit	15	14	13	12	11	10	9	8	7	6	5	4	3	2	1	0
Name									FIFO2_DB1							
Type									Other							
Reset									0	0	0	0	0	0	0	0

Bit(s)	Name	Description
7:0	FIFO2_DB1	The second byte to be loaded to or unloaded from the FIFO.

2A **USB_EP2_FIFO_DB2** **USB Endpoint 2 FIFO Register DB2** **00**

Bit	15	14	13	12	11	10	9	8	7	6	5	4	3	2	1	0
Name									FIFO2_DB2							

This document contains information that is proprietary to MediaTek Inc.
Unauthorized reproduction or disclosure of this information in whole or in part is strictly prohibited.
MEDIATEK CONFIDENTIAL FOR dengzhenli@far-sightedmobile.com USE ONLY

Type									Other							
Reset									0	0	0	0	0	0	0	0

Bit(s)	Name	Description
7:0	FIFO2_DB2	The third byte to be loaded to or unloaded from the FIFO.

2B **USB_EP2_FIFO_DB3** **USB Endpoint 2 FIFO Register DB3** **00**

Bit	15	14	13	12	11	10	9	8	7	6	5	4	3	2	1	0
Name									FIFO2_DB3							
Type									Other							
Reset									0	0	0	0	0	0	0	0

Bit(s)	Name	Description
7:0	FIFO2_DB3	The forth byte to be loaded to or unloaded from the FIFO.

2C **USB_EP3_FIFO_DB0** **USB Endpoint 3 FIFO Register DB0** **00**

Bit	15	14	13	12	11	10	9	8	7	6	5	4	3	2	1	0
Name									FIFO3_DB0							
Type									Other							
Reset									0	0	0	0	0	0	0	0

The register provides MCU access to the FIFO for the endpoint 3. Writing to this register will load data to the FIFO for the endpoint 3. Reading this register will unload data from the FIFO for the endpoint 3.

The register provides word, half word, and byte mode accesses. If word or half word accesses are performed, the less significant byte will correspond to the prior byte to load to or unload from the FIFO.

Bit(s)	Name	Description
7:0	FIFO3_DB0	The first byte to be loaded to or unloaded from the FIFO.

2D **USB_EP3_FIFO_DB1** **USB Endpoint 3 FIFO Register DB1** **00**

Bit	15	14	13	12	11	10	9	8	7	6	5	4	3	2	1	0
Name									FIFO3_DB1							
Type									Other							
Reset									0	0	0	0	0	0	0	0

Bit(s)	Name	Description
7:0	FIFO3_DB1	The second byte to be loaded to or unloaded from the FIFO.

2E **USB_EP3_FIFO** **USB Endpoint 3 FIFO Register DB2** **00**

This document contains information that is proprietary to MediaTek Inc.
Unauthorized reproduction or disclosure of this information in whole or in part is strictly prohibited.
MEDIATEK CONFIDENTIAL FOR dengzhenli@ far-sightedmobile.com USE ONLY

_DB2

Bit	15	14	13	12	11	10	9	8	7	6	5	4	3	2	1	0
Name									FIFO3_DB2							
Type									Other							
Reset									0	0	0	0	0	0	0	0

Bit(s)	Name	Description
7:0	FIFO3_DB2	The third byte to be loaded to or unloaded from the FIFO.

2F USB_EP3_FIFO_DB3 USB Endpoint 3 FIFO Register DB3 00

Bit	15	14	13	12	11	10	9	8	7	6	5	4	3	2	1	0
Name									FIFO3_DB3							
Type									Other							
Reset									0	0	0	0	0	0	0	0

Bit(s)	Name	Description
7:0	FIFO3_DB3	The forth byte to be loaded to or unloaded from the FIFO.

30 USB_EP4_FIFO_DB0 USB Endpoint 4 FIFO Register DB0 00

Bit	15	14	13	12	11	10	9	8	7	6	5	4	3	2	1	0
Name									FIFO4_DB0							
Type									Other							
Reset									0	0	0	0	0	0	0	0

The register provides MCU access to the FIFO for the endpoint 4. Writing to this register will load data to the FIFO for the endpoint 4. Reading this register will unload data from the FIFO for the endpoint 4.

The register provides word, half word, and byte mode accesses. If word or half word accesses are performed, the less significant byte will correspond to the prior byte to load to or unload from the FIFO.

Bit(s)	Name	Description
7:0	FIFO4_DB0	The first byte to be loaded to or unloaded from the FIFO.

31 USB_EP4_FIFO_DB1 USB Endpoint 4 FIFO Register DB1 00

Bit	15	14	13	12	11	10	9	8	7	6	5	4	3	2	1	0
Name									FIFO4_DB1							
Type									Other							
Reset									0	0	0	0	0	0	0	0

Bit(s)	Name	Description
7:0	FIFO4_DB1	The second byte to be loaded to or unloaded from the FIFO.

This document contains information that is proprietary to MediaTek Inc.
Unauthorized reproduction or disclosure of this information in whole or in part is strictly prohibited.
MEDIATEK CONFIDENTIAL FOR dengzhenli@far-sightedmobile.com USE ONLY

32 USB_EP4_FIFO_DB2 USB Endpoint 4 FIFO Register DB2 00

Bit	15	14	13	12	11	10	9	8	7	6	5	4	3	2	1	0
Name									FIFO4_DB2							
Type									Other							
Reset									0	0	0	0	0	0	0	0

Bit(s)	Name	Description
7:0	FIFO4_DB2	The third byte to be loaded to or unloaded from the FIFO.

33 USB_EP4_FIFO_DB3 USB Endpoint 4 FIFO Register DB3 00

Bit	15	14	13	12	11	10	9	8	7	6	5	4	3	2	1	0
Name									FIFO4_DB3							
Type									Other							
Reset									0	0	0	0	0	0	0	0

Bit(s)	Name	Description
7:0	FIFO4_DB3	The forth byte to be loaded to or unloaded from the FIFO.

240 USB_CON USB PHY Control 20

Bit	15	14	13	12	11	10	9	8	7	6	5	4	3	2	1	0
Name											NULLPKT_FIX				DMPULLUP	DPPULLUP
Type											RW				RW	RW
Reset											1				0	0

Bit(s)	Name	Description
5	NULLPKT_FIX	If NULLPKT_FIX is set to 1, the USB controller will not issue a DMAreq when a null packet is received.
1	DMPULLUP	Pull-up enabling pin. Enables the pull-up 1.5KOhm pull-up on D pin as a full speed device by setting it to high
0	DPPULLUP	Pull-up enabling pin. Enables the pull-up 1.5KOhm pull-up on D+ pin as a full speed device by setting it to high

3.14.4 System Integration Guide

3.14.4.1 USB device configuration

The target audience of this section is the software engineer.

The USB device controller features one control endpoint and 6 other endpoints. The configuration of interfaces and endpoints can be accommodated by software for specific functions, basically supporting Bluetooth HCI, and device firmware upgrade.

This document contains information that is proprietary to MediaTek Inc.
Unauthorized reproduction or disclosure of this information in whole or in part is strictly prohibited.
MEDIATEK CONFIDENTIAL FOR dengzhenli@far-sightedmobile.com USE ONLY

Bluetooth HCI transport layer defines the configuration of endpoints and interfaces.

✓ One voice channel with 16-bit encoding.

Endpoint	Endpoint type	Max. packet size (bytes)	Max. bandwidth (bytes/ms)	Min. bandwidth (bytes/ms)	Double buffer in controller	Generic DMA
Endpoint 0 (command)	Control	64			No	No
Endpoint 1 IN	Bulk (IN)	64		1024	No	Yes
Endpoint 2 OUT	Bulk (OUT)	64		1024	No	Yes
Endpoint 2 IN	Bulk (IN)	64	1024		No	Yes
Endpoint 2 OUT	Bulk (OUT)	64	1024		No	Yes
Endpoint 3 IN	Interrupt (IN)	16		16	No	No
Endpoint 4 IN	Interrupt (IN)	16		16	No	No

*When the maximum packet size is smaller than one half of the device FIFO size (64 bytes), the double buffer will be automatically enabled by hardware.

The pull-up resister on the USB transceiver is initially disconnected when boot-up. No external resistor is required. The software should enable it after performing the configuration of the USB device controller.

3.14.4.2 System Infrastructure Configuration

The clock, interrupt and DMA are defined as the system infrastructure. It requires several steps to bring up the USB. Those steps should be done in sequence to prevent from malfunction.

Power-on

1. Enable USB PLL.

2. Enable USB clock after USB PLL is settled.

3. Unmask the USB interrupt in the interrupt controller.

4. Enable the pull-up resistor.

The USB device controller can generate the interrupt when conditions are met as defined in USB_INTRINE, USB_INTROUTE, and USB_INTRUSBE.

The generic DMA controller is used to move data from or to the USB device controller. The USB device controller will use at most 4 DMA channels for ACL and SCO. The user should use the half-channel DMA since only the half channel DMA has the hardware flow control.

This document contains information that is proprietary to MediaTek Inc.
Unauthorized reproduction or disclosure of this information in whole or in part is strictly prohibited.
MEDIATEK CONFIDENTIAL FOR dengzhenli@far-sightedmobile.com USE ONLY

The USB FIFO provides byte and word accesses to the read/write port of USB_EP0_FIFO, USB_EP1_FIFO, USB_EP2_FIFO, USB_EP3_FIFO and USB_EP4_FIFO. If the data buffer allocated in memory is word aligned, the user can enable word transfer in the DMA controller. If the data buffer allocated in memory is not word aligned, the user should set to byte aligned and set B2W in DMAx_CON to 1 to enable fast byte-to-word transfer.

3.14.4.3 Power On/Off USB PHY and Controller Sequence

Power-on sequence after plug-in

1. Turn on Vusb(PHY 3.3v power) – The control register is in PMIC document.
2. Turn on USB AHB clock(78MHz) – The control register is in config document.
3. Turn on internal 48MHz PLL – the control register is in clock document.
4. Wait for 50 usec. (PHY 3.3v power stable time)
5. Turn on USB PHY BIAS current control → reg[USB+08C1h] bit3 = 1. (RG_USB11_FSLS_ENBGRI).
6. Wait for 10 usec.
7. Set up D+ pull up register for connecting Host → reg[USB+0240h] bit 0 =1(PUB)

Power-off sequence after plug-out

1. Release D+ pull up register for disconnecting Host → Setting reg[USB+0240h] bit 0 =0 (PUB)
2. Turn off USB PHY BIAS current control → reg[USB+08C1h] bit3 = 0. (RG_USB11_FSLS_ENBGRI).
3. Turn off Vusb (PHY 3.3v power) – The control register is in PMIC document

3.15 Accessory Detector

1.1.1 General Description

The hardware accessory detector (ACCDET) detects plug-in/out of multiple types of external components. Based on the suggested circuit (see **Figure 42**), this design supports 3 types of external components, which are microphone, hook-switch and TV-OUT line. This design uses the internal 2-bit comparator to separate external components. The de-bounce scheme is also supported to resist uncertain input noises. When the plug-in/out state is stable, the PWM unit of ACCDET will enable the comparator, MBIAS and threshold voltage of the comparator periodically for the plugging detection. With suitable PWM settings, very low-power consumption can be achieved when the detection feature

This document contains information that is proprietary to MediaTek Inc.
Unauthorized reproduction or disclosure of this information in whole or in part is strictly prohibited.
MEDIATEK CONFIDENTIAL FOR denzhenli@far-sightedmobile.com USE ONLY

is enabled. In order to compensate the delay between the detection login and comparator, the delay enabling scheme is adopted. Given the suitable delay number compared to the rising edge of PWM high pulse, the stable plugging state can be prorogated to digital detection logic. Then the correct plugging state can be detected and reported.

Figure 42 shows the state machine without TV-OUT mode. The state machine is executed by the software to control the ACCDET design. The ACCDET design will send one interrupt to acknowledge the software after the ACCDET input state is changed and the duration of the state is longer than de-bounce time. The software needs to read out the memorized ACCDET input state and follow the recommend state machine to program the register in it.

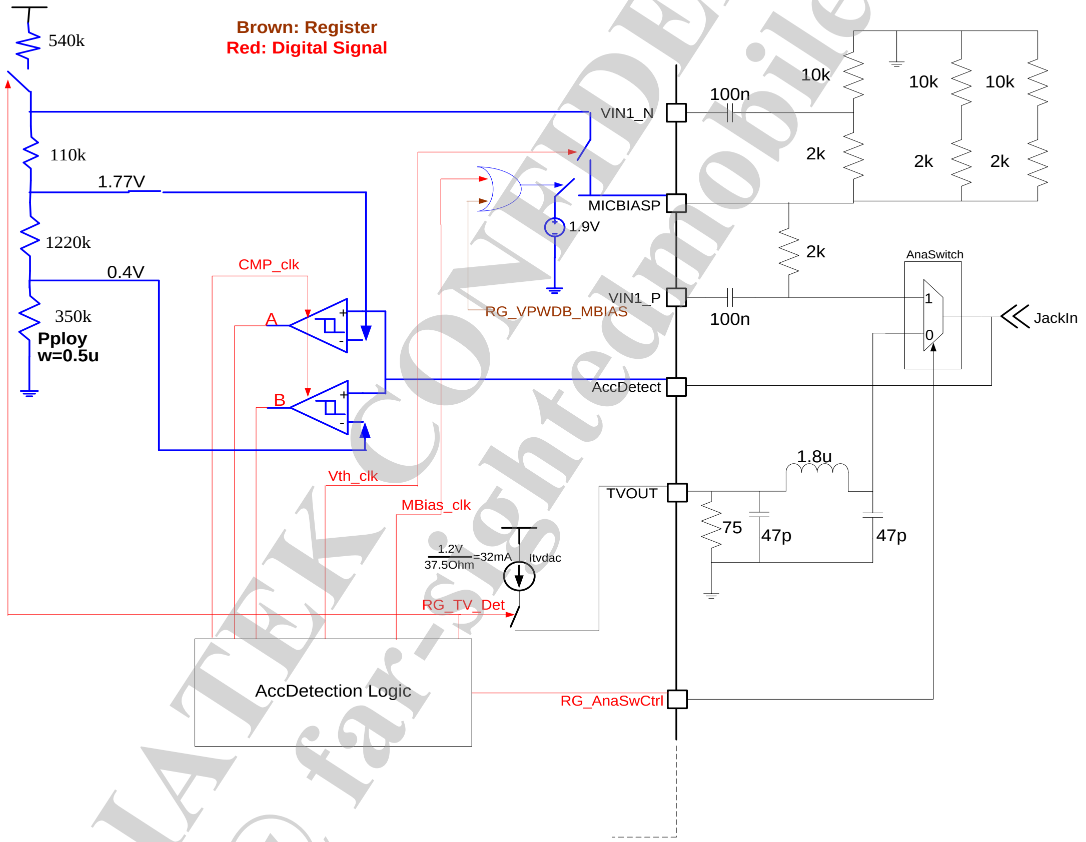

Figure 42. Suggested Accessory Detection Circuit.

This document contains information that is proprietary to MediaTek Inc.
Unauthorized reproduction or disclosure of this information in whole or in part is strictly prohibited.
MEDIATEK CONFIDENTIAL FOR dengzhenli@far-sightedmobile.com USE ONLY

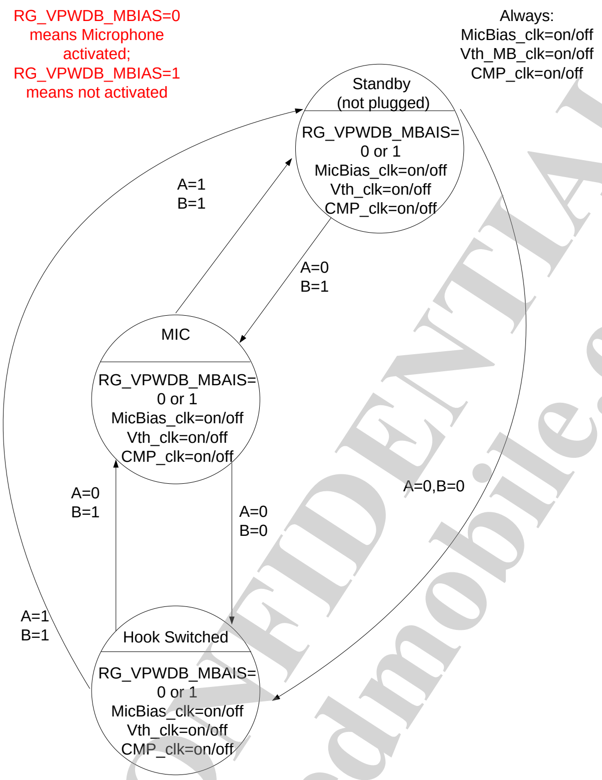

Figure 43. The Sate machine between Microphone and Hook-Switch plug-in/out change.

1.1.2 Pulse Width Modulation

The ACCDET design also provides one Pulse-Width-Modulation (PWM) to enable the comparator, microphone's bias current and the threshold voltage of the comparator periodically. With suitable PWM and settings for delayed enabling, the ACCDET can achieve very low power consumption and accurate plug-in/out detection. ***Figure*** 44 shows a timing diagram example of such PWM design. The output from PWM keeps being at "0" until the value of the counter is smaller than the programmed threshold.

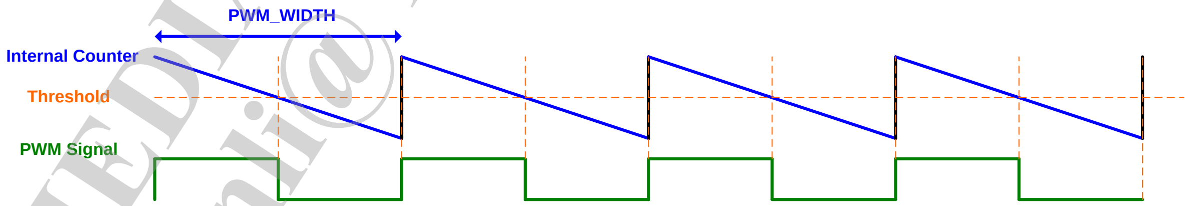

Figure 44. PWM waveform.

1.1.3 Register Definition

Module name: ACCDET base address: (+A0750000h)

Address	Name	Width	Register function

This document contains information that is proprietary to MediaTek Inc.
Unauthorized reproduction or disclosure of this information in whole or in part is strictly prohibited.
MEDIATEK CONFIDENTIAL FOR dengzhenli@far-sightedmobile.com USE ONLY

Address	Name	Width	Register function
A0750000	**ACCDET_RSTB**	32	ACCDET software reset register
A0750004	**ACCDET_CTRL**	32	ACCDET control register
A0750008	**ACCDET_STATE_SWCTRL**	32	ACCDET state switch control register
A075000C	**ACCDET_PWM_WIDTH**	32	ACCDET PWM width register
A0750010	**ACCDET_PWM_THRESH**	32	ACCDET PWM threshold register
A0750024	**ACCDET_EN_DELAY_NUM**	32	ACCDET enable delay number register
A0750028	**ACCDET_PWM_IDLE_VALUE**	32	ACCDET PWM IDLE value register
A075002C	**ACCDET_DEBOUNCE0**	32	ACCDET debounce0 register
A0750030	**ACCDET_DEBOUNCE1**	32	ACCDET debounce1 register
A0750038	**ACCDET_DEBOUNCE3**	32	ACCDET debounce3 register
A075003C	**ACCDET_IRQ_STS**	32	ACCDET interrupt status register
A0750040	**ACCDET_CURR_IN**	32	ACCDET current input status register
A0750044	**ACCDET_SAMPLE_IN**	32	ACCDET sampled input status register
A0750048	**ACCDET_MEMOIZED_IN**	32	ACCDET memorized input status register
A075004C	**ACCDET_LAST_MEMOIZED_IN**	32	ACCDET last memorized input status register
A0750050	**ACCDET_FSM_STATE**	32	ACCDET FSM status register
A0750054	**ACCDET_CURR_DEBOUNCE**	32	ACCDET current de-bounce status register
A0750058	**ACCDET_VERSION**	32	ACCDET version code
A075005C	**ACCDET_IN_DEFAULT**	32	default value of accdet_in

A0750000 ACCDET_RSTB ACCDET Software Reset Register 00000001

Bit	31	30	29	28	27	26	25	24	23	22	21	20	19	18	17	16
Mne																
Type																
Reset																
Bit	15	14	13	12	11	10	9	8	7	6	5	4	3	2	1	0
Mne																RSTB
Type																RW
Reset																1

Overview: After applying the setting to register, software reset is necessary for state initialization. Without this process, ACCDET may detect incorrect plug state.

Bit(s)	Mnemonic	Name	Description
0	RSTB	RSTB	**Set to 0 to reset the ACCDET unit and set to 1 after the reset process is finished.** This software reset will clear ACCDET's enable signal but keep all ACCDET's settings. After the reset process, ACCDET will return to the IDLE state.

A0750004 ACCDET_CTRL ACCDET Control Register 00000001

Bit	31	30	29	28	27	26	25	24	23	22	21	20	19	18	17	16
Mne																

This document contains information that is proprietary to MediaTek Inc.
Unauthorized reproduction or disclosure of this information in whole or in part is strictly prohibited.
MEDIATEK CONFIDENTIAL FOR dengzhenli@far-sightedmobile.com INTERNAL USE ONLY

Type																
Reset																
Bit	15	14	13	12	11	10	9	8	7	6	5	4	3	2	1	0
Mne																ACCDET_EN
Type																RW
Reset																1

Bit(s)	Mnemonic	Name	Description
0	ACCDET_EN	EN	Set to 1 to enable the ACCDET unit.

A0750008 ACCDET_STATE_SWCTRL ACCDET State Switch Control Register 00000001

Bit	31	30	29	28	27	26	25	24	23	22	21	20	19	18	17	16
Mne																
Type																
Reset																
Bit	15	14	13	12	11	10	9	8	7	6	5	4	3	2	1	0
Mne												MBIAS_PWM_EN	VTH_PWM_EN	CMP_PWM_EN		
Type												RW	RW	RW		
Reset												0	0	0		

Bit(s)	Mnemonic	Name	Description
4	MBIAS_PWM_EN	MBIAS_PWM_EN	Enables PWM of ACCDET MBIAS unit
3	VTH_PWM_EN	VTH_PWM_EN	Enables PWM of ACCDET voltage threshold unit
2	CMP_PWM_EN	CMP_PWM_EN	Enables PWM of ACCDET comparator

A075000C ACCDET_PWM_WIDTH ACCDET PWM Width Register 00000000

Bit	31	30	29	28	27	26	25	24	23	22	21	20	19	18	17	16
Mne																
Type																
Reset																
Bit	15	14	13	12	11	10	9	8	7	6	5	4	3	2	1	0
Mne	PWM_WIDTH															
Type	RW															
Reset	0	0	0	0	0	0	0	0	0	0	0	0	0	0	0	0

Bit(s)	Mnemonic	Name	Description
15:0	PWM_WIDTH	PWM_WIDTH	**ACCDET PWM width** It is PWM max. counter value. It will be the initial value for the internal counter. The PWM internal counter always counts down to zero to

This document contains information that is proprietary to MediaTek Inc.
Unauthorized reproduction or disclosure of this information in whole or in part is strictly prohibited.
MEDIATEK CONFIDENTIAL FOR dengzhenli@far-sightedmobile.com USE ONLY

Bit(s)	Mnemonic	Name	Description
			finish one compete period, and the value of the internal counter will return to the value of PWM_WIDTH. PWM output frequency = (32k/PWM_WIDTH) Hz.

A0750010 ACCDET_PWM_THRESH ACCDET PWM Threshold Register 00000000

Bit	31	30	29	28	27	26	25	24	23	22	21	20	19	18	17	16
Mne																
Type																
Reset																
Bit	**15**	**14**	**13**	**12**	**11**	**10**	**9**	**8**	**7**	**6**	**5**	**4**	**3**	**2**	**1**	**0**
Mne	PWM_THRESH															
Type	RW															
Reset	0	0	0	0	0	0	0	0	0	0	0	0	0	0	0	0

Bit(s)	Mnemonic	Name	Description
15:0	PWM_THRESH	PWM_THRESH	**ACCDET PWM threshold** When the internal counter value is bigger than or equal to PWM_THRESH, the PWM output signal will be "0". When the internal counter is smaller than PWM_THRESH, the PWM output signal will be "1". PWM output duty cycle = (PWM_THRESH)x(1/32) ms.

shows the PWM waveform with register value present.

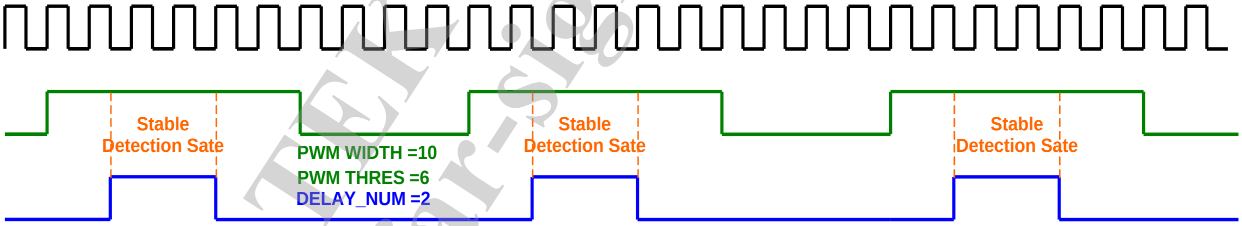

Figure 45. PWM waveform with register value present

A0750024 ACCDET_EN_DELAY_NUM ACCDET Enable Delay Number Register 00000101

Bit	31	30	29	28	27	26	25	24	23	22	21	20	19	18	17	16
Mne																
Type																
Reset																
Bit	**15**	**14**	**13**	**12**	**11**	**10**	**9**	**8**	**7**	**6**	**5**	**4**	**3**	**2**	**1**	**0**
Mne	FALL_DELAY_NUM	RISE_DELAY_NUM														
Type	RW	RW														
Reset	0	0	0	0	0	0	0	1	0	0	0	0	0	0	0	1

This document contains information that is proprietary to MediaTek Inc.
Unauthorized reproduction or disclosure of this information in whole or in part is strictly prohibited.

Bit(s)	Mnemonic	Name	Description
15	**FALL_DELAY_NUM**	FALL_DELAY_NUM	**Falling delay cycle compared to CMP PWM waveform** In order to make sure the plug state is stable after disabling ACCDET, the suitable delay cycle is necessary. This number indicates the clock cycle number between the point when the digital part of ACCDET stops receiving accdet_in and the point when the analog part of ACCDET stops working.
14:0	**RISE_DELAY_NUM**	RISE_DELAY_NUM	**Rising delay cycle compared to PWM waveform** In order to make sure the plug state is stable before activating ACCDET, the suitable delay cycle is necessary. This number indicates the clock cycle number between the point when the analog part of ACCDET starts working and the point when the digital part of ACCDET starts receiving stable accdet_in. This number should be fine tuned depending on different project requirements.

A0750028 ACCDET_PWM_IDLE_VALUE ACCDET PWM IDLE Value Register 00000001

Bit	31	30	29	28	27	26	25	24	23	22	21	20	19	18	17	16
Mne																
Type																
Reset																
Bit	15	14	13	12	11	10	9	8	7	6	5	4	3	2	1	0
Mne														MBIAS	VTH	CMP
Type														RW	RW	RW
Reset														0	0	1

Bit(s)	Mnemonic	Name	Description
2	**MBIAS**	MBIAS	IDLE value of MBIAS PWM
1	**VTH**	VTH	IDLE value of VTH PWM
0	**CMP**	CMP	IDLE value of CMP PWM

A075002C ACCDET_DEBOUNCE0 ACCDET Debounce0 Register 00000010

Bit	31	30	29	28	27	26	25	24	23	22	21	20	19	18	17	16
Mne																
Type																
Reset																
Bit	15	14	13	12	11	10	9	8	7	6	5	4	3	2	1	0
Mne	DEBOUNCE0															
Type	RW															
Reset	0	0	0	0	0	0	0	0	0	0	0	1	0	0	0	0

Overview: This register defines the waiting period before plug-in/out or release events are considered stable. If the de-bounce setting is too small, the plug-in/out will be too sensitive and detect too many unexpected plug-ins/outs. The suitable de-bounce time setting must be adjusted for the user's demand.

Bit(s)	Mnemonic	Name	Description

This document contains information that is proprietary to MediaTek Inc.
Unauthorized reproduction or disclosure of this information in whole or in part is strictly prohibited.
MEDIATEK CONFIDENTIAL FOR dengzhenli@farsightedmobile.com USE ONLY

Bit(s)	Mnemonic	Name	Description
15:0	**DEBOUNCE0**	DEBOUNCE0	**De-bounce time control of the next state = 2'b00** De-bounce time = DEBOUNCE/32 ms

A0750030 ACCDET_DEBOUNCE1 ACCDET Debounce1 Register 00000010

Bit	31	30	29	28	27	26	25	24	23	22	21	20	19	18	17	16
Mne																
Type																
Reset																
Bit	15	14	13	12	11	10	9	8	7	6	5	4	3	2	1	0
Mne	DEBOUNCE1															
Type	RW															
Reset	0	0	0	0	0	0	0	0	0	0	0	1	0	0	0	0

Overview: This register defines the waiting period before plug-in/out or release events are considered stable. If the de-bounce setting is too small, the plug-in/out will be too sensitive and detect too many unexpected plug-ins/outs. The suitable de-bounce time setting must be adjusted for the user's demand.

Bit(s)	Mnemonic	Name	Description
15:0	**DEBOUNCE1**	DEBOUNCE1	**De-bounce time control of the next state = 2'b01** De-bounce time = DEBOUNCE/32 ms

A0750034 ACCDET_DEBOUNCE2 ACCDET Debounce2 Register 00000010

Bit	31	30	29	28	27	26	25	24	23	22	21	20	19	18	17	16
Mne																
Type																
Reset																
Bit	15	14	13	12	11	10	9	8	7	6	5	4	3	2	1	0
Mne	DEBOUNCE2															
Type	RW															
Reset	0	0	0	0	0	0	0	0	0	0	0	1	0	0	0	0

Overview: This register defines the waiting period before plug-in/out or release events are considered stable. If the de-bounce setting is too small, the plug-in/out will be too sensitive and detect too many unexpected plug-ins/outs. The suitable de-bounce time setting must be adjusted for the user's demand.

Bit(s)	Mnemonic	Name	Description
15:0	**DEBOUNCE2**	DEBOUNCE2	**De-bounce time control of the next state = 2'b10** De-bounce time = DEBOUNCE/32 ms

A0750038 ACCDET_DEBOUNCE3 ACCDET Debounce3 Register 00000010

Bit	31	30	29	28	27	26	25	24	23	22	21	20	19	18	17	16

This document contains information that is proprietary to MediaTek Inc.
Unauthorized reproduction or disclosure of this information in whole or in part is strictly prohibited.
FOR denghenli@far-sightedmobile.com USE ONLY MEDIATEK CONFIDENTIAL

Mne																
Type																
Reset																
Bit	15	14	13	12	11	10	9	8	7	6	5	4	3	2	1	0
Mne	**DEBOUNCE3**															
Type	RW															
Reset	0	0	0	0	0	0	0	0	0	0	0	1	0	0	0	0

Overview: This register defines the waiting period before plug-in/out or release events are considered stable. If the de-bounce setting is too small, the plug-in/out will be too sensitive and detect too many unexpected plug-ins/outs. The suitable de-bounce time setting must be adjusted for the user's demand.

Bit(s)	Mnemonic	Name	Description
15:0	**DEBOUNCE3**	DEBOUNCE3	**De-bounce time control of the next state = 2'b11** De-bounce time = DEBOUNCE/32 ms

A075003C ACCDET_IRQ_STS ACCDET Interrupt Status Register 00000000

Bit	31	30	29	28	27	26	25	24	23	22	21	20	19	18	17	16
Mne																
Type																
Reset																
Bit	15	14	13	12	11	10	9	8	7	6	5	4	3	2	1	0
Mne								**IRQ_CLR**								**IRQ**
Type								RW								RW
Reset								0								0

Overview: When the interrupt of ACCDET is asserted, IRQ_CLR must be set to 1 to clear the interrupt status. This bit will pause all activities in the ACCDET design until both interrupt status and IRQ_CLR are cleared. The software should write 1 to IRQ_CLR first to clear the interrupt (IRQ). After that, if pclk gating is enabled, the software should read ACCDET_IRQ_STS again to make IRQ_CLR self-reset to 0.

Bit(s)	Mnemonic	Name	Description
8	**IRQ_CLR**	IRQ_CLR	**Clears interrupt status of ACCDET unit**
0	**IRQ**	IRQ	**Interrupt status of ACCDET unit** Because this register will be cleared by hardware, the interrupt edge-sensitive scheme should be adopted for this design.

A0750040 ACCDET_CURR_IN ACCDET Current Input Status Register 00000003

Bit	31	30	29	28	27	26	25	24	23	22	21	20	19	18	17	16
Mne																
Type																
Reset																
Bit	15	14	13	12	11	10	9	8	7	6	5	4	3	2	1	0
Mne															**CURR_IN**	
Type															RO	
Reset															1	1

This document contains information that is proprietary to MediaTek Inc.
Unauthorized reproduction or disclosure of this information in whole or in part is strictly prohibited.

Bit(s)	Mnemonic	Name	Description
1:0	**CURR_IN**	CURR_IN	Current input status of ACCDET unit

A0750044 ACCDET_SAMPLE_IN ACCDET Sampled Input Status Register 00000003

Bit	31	30	29	28	27	26	25	24	23	22	21	20	19	18	17	16
Mne																
Type																
Reset																
Bit	15	14	13	12	11	10	9	8	7	6	5	4	3	2	1	0
Mne															SAMPLE_IN	
Type															RO	
Reset															1	1

Bit(s)	Mnemonic	Name	Description
1:0	**SAMPLE_IN**	SAMPLE_IN	**Samples input status of ACCDET unit** When the plug-in/out state is changed, the ACCDET unit will do sampling.

A0750048 ACCDET_MEMOIZED_IN ACCDET Memorized Input Status Register 00000003

Bit	31	30	29	28	27	26	25	24	23	22	21	20	19	18	17	16
Mne																
Type																
Reset																
Bit	15	14	13	12	11	10	9	8	7	6	5	4	3	2	1	0
Mne															MEMORIZED_IN	
Type															RO	
Reset															1	1

Bit(s)	Mnemonic	Name	Description
1:0	**MEMORIZED_IN**	MEMORIZED_IN	**Memorized input status of ACCDET unit** When the plug-in/out states is changed and held longer than the de-bounce time, the ACCDET unit will save the sampled input state to the memorized state. The interrupt will also be asserted to acknowledge the software.

A075004C ACCDET_LAST_MEMOIZED_IN ACCDET Last Memorized Input Status Register 00000003

Bit	31	30	29	28	27	26	25	24	23	22	21	20	19	18	17	16
Mne																
Type																
Reset																
Bit	15	14	13	12	11	10	9	8	7	6	5	4	3	2	1	0
Mne															LAST_MEMORIZED_IN	

This document contains information that is proprietary to MediaTek Inc.
Unauthorized reproduction or disclosure of this information in whole or in part is strictly prohibited.

Type															RO	
Reset															1	1

Bit(s)	Mnemonic	Name	Description
1:0	**LAST_MEMORIZED_IN**	LAST_MEMORIZED_IN	Last memorized input status of ACCDET unit

A0750050 ACCDET_FSM_STATE ACCDET FSM Status Register 00000000

Bit	31	30	29	28	27	26	25	24	23	22	21	20	19	18	17	16
Mne																
Type																
Reset																
Bit	15	14	13	12	11	10	9	8	7	6	5	4	3	2	1	0
Mne														**FSM_STATE**		
Type														RO		
Reset														0	0	0

Bit(s)	Mnemonic	Name	Description
2:0	**FSM_STATE**	FSM_SATE	**State of ACCDET unit finite-state-machine** 0: ACCDET_IDLE 1: ACCDET_SAMPLE 2: ACCDET_DEBOUNCE 3: ACCDET_CHECK 4: ACCDET_MEMORIZED 5: ACCDET_IRQ

A0750054 ACCDET_CURR_DEBOUNCE ACCDET Current De-bounce Status Register 00000004

Bit	31	30	29	28	27	26	25	24	23	22	21	20	19	18	17	16
Mne																
Type																
Reset																
Bit	15	14	13	12	11	10	9	8	7	6	5	4	3	2	1	0
Mne	**CURR_DEBOUNCE**															
Type	RO															
Reset	0	0	0	0	0	0	0	0	0	0	0	0	0	1	0	0

Bit(s)	Mnemonic	Name	Description
15:0	**CURR_DEBOUNCE**	CURR_DEBOUNCE	Currently used de-bounce time setting

A0750058 ACCDET_VERSION ACCDET Version Code 000000 03

Bit	31	30	29	28	27	26	25	24	23	22	21	20	19	18	17	16
Name																
Type																
Reset																

This document contains information that is proprietary to MediaTek Inc.
Unauthorized reproduction or disclosure of this information in whole or in part is strictly prohibited.

Bit	15	14	13	12	11	10	9	8	7	6	5	4	3	2	1	0
Name															ACCDET_VERSION	
Type															RO	
Reset															1	1

Bit(s)	Mnemonic	Name	Description
1:0	**ACCDET_VERSION**	ACCDET_VERSION	Version code for ACCDET

A075005C **ACCDET_IN_DEFAULT** **Default Value of accdet_in** **00000000**

Bit	31	30	29	28	27	26	25	24	23	22	21	20	19	18	17	16
Name																
Type																
Reset																
Bit	15	14	13	12	11	10	9	8	7	6	5	4	3	2	1	0
Name												ACCDET_IN_DEFAULT_REFRESH_EN			ACCDET_IN_DEFAULT	
Type												RW			RW	
Reset												0			0	0

Overview: The default value of sample_accdet_in and memorised_accdet_in can be set by software instead of using the default value set by hardware(i.e. 3). ACCDET_DEFAULT_REFRESH_EN is the enable bit controlling whether to use this additional function. The value of sample_accdet_in and memorized_accdet_in will change when accdet_en rises from low to high. *Note that if software reset is applied when accdet_en is high, the default value of sample_accdet_in and memorized_accdet_in will also be loaded when the software reset is de-asserted.*

Bit(s)	Mnemonic	Name	Description
4	**ACCDET_IN_DEFAULT_REFRESH_EN**	ACCDET_IN_DEFAULT_REFRESH_EN	**Enable signal for whether to load accdet_in_default** 0: accdet_in_default will not be loaded. 1: accdet_in_default will be loaded.
1:0	**ACCDET_IN_DEFAULT**	ACCDET_IN_DEFAULT	**Default value of accdet_in set by software**

3.16 SD Memory Card Controller (SDMC0)

3.16.1 Introduction

The controller fully supports the SD memory card bus protocol as defined in SD Memory Card Specification Part 1 Physical Layer Specification version 2.0.

This document contains information that is proprietary to MediaTek Inc.
Unauthorized reproduction or disclosure of this information in whole or in part is strictly prohibited.
MEDIATEK CONFIDENTIAL FOR dengzhenli@far-sightedmobile.com USE ONLY

Furthermore, the controller also partially supports the SDIO card specification version 2.0. However, the controller can only be configured as the host of the SD memory card. Hereafter, the controller is also abbreviated as the SD controller. The following are the main features of the controller.

- Interface with MCU by APB bus
- 16/32-bit access on APB bus
- 16/32-bit access for control registers
- 32-bit access for FIFO
- Built-in 32 bytes FIFO buffers for transmit and receive, FIFO is shared for transmit and receive
- Built-in CRC circuit
- CRC generation can be disabled
- DMA supported
- Interrupt capabilities
- Data rate up to 48 Mbps in serial mode, 48x4 Mbps in parallel model, the module is targeted at 48 MHz operating clock
- Serial clock rate on SD bus is programmable
- Card detection capabilities during sleep mode
- Controllability of power for memory card
- Does not support SPI mode for SD memory card
- Does not support multiple SD memory cards

3.16.2 Overview

3.16.2.1 Pin Assignment

The following lists pins required for the SD memory card. Table 51 shows how the pins are shared. Note that all I/O pads have embedded both pull-up and pull-down resistors because they are shared by the SD memory card. The pull-down resistors for these pins can be used for power saving. If optimal pull-up or pull-down resistors are required on the system board, all embedded pull-up and pull-down resistors can be disabled by programming the corresponding control registers. The VDDPD pin is used for power saving. Power for the SD memory card can be shut down by programming the corresponding control register. The WP (Write Protection) pin is used to detect the status of the Write Protection Switch on the SD memory card.

Table 51. Sharing of pins for SD memory card controller

No.	Name	Type	MMC	SD	Description
1	SD_CLK	O	CLK	CLK	Clock
2	SD_DAT3	I/O/PP	-	CD/DAT3	Data Line [Bit 3]
3	SD_DAT0	I/O/PP	DAT0	DAT0	Data Line [Bit 0]
4	SD_DAT1	I/O/PP	-	DAT1	Data Line [Bit 1]
5	SD_DAT2	I/O/PP	-	DAT2	Data Line [Bit 2]

This document contains information that is proprietary to MediaTek Inc.
Unauthorized reproduction or disclosure of this information in whole or in part is strictly prohibited.
MEDIATEK CONFIDENTIAL FOR dengzhenli@far-sightedmobile.com USE ONLY

No.	Name	Type	MMC	SD	Description
6	SD_CMD	I/O/PP	CMD	CMD	Command Or Bus State
7	SD_PWRON	O	-	-	VDD ON/OFF
8	SD_WP	I		-	Write Protection Switch in SD
9	SD_INS	I	VSS2	VSS2	Card Detection

3.16.2.2 Card Detection

For SD memory card, detection of card insertion/removal by hardware is supported, and a dedicated pin "INS" is used to perform card insertion and removal for SD. The pin "INS" will be connected to the pin "VSS2" of a SD connector (see **Figure 46**).

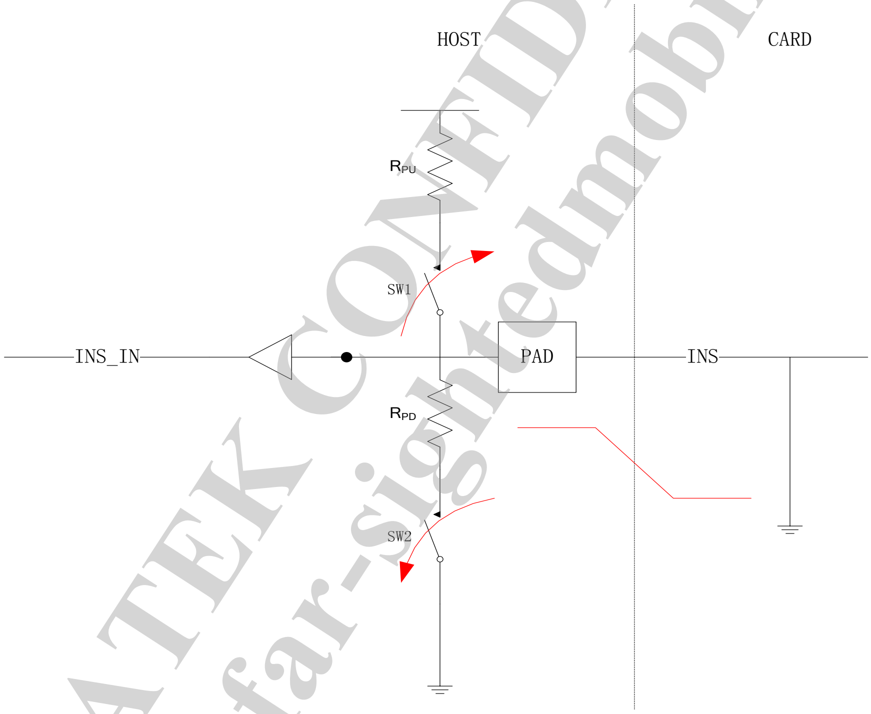

Figure 46. Card detection for SD memory card

3.16.3 Register Definition

Module name: MSDC0 base address: (+A0130000h)

Address	Name	Width	Register function
A0130000	**MSDC_CFG**	32	**SD memory card controller configuration register** For general configuration of the SD controller. *Note: MSDC_CFG[31:16] can be accessed by 16-bit APB bus access.*
A0130004	**MSDC_STA**	32	**SD memory card controller status register** Contains the status of FIFO, interrupts and data requests.

This document contains information that is proprietary to MediaTek Inc.
Unauthorized reproduction or disclosure of this information in whole or in part is strictly prohibited.
MEDIATEK CONFIDENTIAL FOR denglhenli@far-sightedmobile.com USE ONLY

Address	Name	Width	Register function
A0130008	**MSDC_INT**	32	**SD memory card controller interrupt register** Contains the status of interrupts. Note that the register still shows the status of interrupt even though the interrupt is disabled, that is, register bit INTEN of register MSDC_CFG is set to 0. It implies that software interrupt can be implemented by polling register bit INT of register MSDC_STA and this register. However, if hardware interrupt is desired, be sure to clear the register before setting up register bit INTEN of register MSDC_CFG to 1, or undesired hardware interrupt arisen from the previous interrupt status may take place.
A013000C	**MSDC_PS**	32	**SD memory card pin status register** Used for card detection. When the memory card controller and system are powered on, the power for the memory card will still be off unless the power is supplied by the PMIC. Meanwhile, the pad for card detection defaults to pull down when the system is powered on. The scheme of card detection for MS is the same as that for SD. For detecting card insertion, first pull up the INS pin and then enable card detection and the input pin at the same time. After 32 cycles of controller clock, the status of pin changes will emerge. To detect card removal, simply keep enabling card detection and the input pin.
A0130010	**MSDC_DAT**	32	**SD memory card controller data register** Reads/Writes data from/to FIFO inside SD controller. Data access unit: 32 bits
A0130014	**MSDC_IOCON**	32	**SD memory card controller IO control register** Specifies output driving capability and slew rate of IO pads for MSDC. The reset value is suggested setting. If the output driving capability of pins DAT0, DAT1, DAT2 and DAT3 is too large, it is possible to arise ground bounce and thus result in glitch on SCLK. The actual driving current will depend on the PAD type selected for the chip.
A0130018	**MSDC_IOCON1**	32	**SD memory card controller IO control register 1**
A0130020	**SDC_CFG**	32	**SD memory card controller configuration register** Configures the SD memory card controller when it is configured as the host of SD. If the controller is configured as the host of memory stick, the contents of the register will have no impact on the operation of the controller. *Note: SDC_CFG[31:16] can be accessed by 16-bit APB bus access.*
A0130024	**SDC_CMD**	32	**SD memory card controller command register** Defines a SD memory card command and its attribute. Before the SD controller issues a transaction onto the SD bus, application shall specify other relative settings such as argument for command. After application writes

This document contains information that is proprietary to MediaTek Inc.
Unauthorized reproduction or disclosure of this information in whole or in part is strictly prohibited.
MEDIATEK CONFIDENTIAL FOR USE ONLY dengzhenli@far-sighted mobile.com

Address	Name	Width	Register function
			the register, the SD controller will issue the corresponding transaction onto SD serial bus. If the command is GO_IDLE_STATE, the controller will have serial clock on SD bus run 128 cycles before issuing the command.
A0130028	SDC_ARG	32	**SD memory card controller argument register** Contains argument of the SD memory card command.
A013002C	SDC_STA	32	**SD memory card controller status register** Contains various statuses of SD controller as the controller is configured as the host of SD memory card.
A0130030	SDC_RESP0	32	**SD memory card controller response register 0** Contains parts of the last SD memory card bus response. See descriptions of register field SDC_RESP3.
A0130034	SDC_RESP1	32	**SD memory card controller response register 1** Contains parts of the last SD memory card bus response. See descriptions of register field SDC_RESP3.
A0130038	SDC_RESP2	32	**SD memory card controller response register 2** Contains parts of the last SD memory card bus response. See descriptions of register field SDC_RESP3.
A013003C	SDC_RESP3	32	**SD memory card controller response register 3** Contains parts of the last SD memory card bus response. Register fields SDC_RESP0, SDC_RESP1, SDC_RESP2 and SDC_RESP3 compose the last SD memory card bus response. For response of type R2, that is, response of the command ALL_SEND_CID, SEND_CSD and SEND_CID, only bit 127 to 0 of the response token are stored in register field SDC_RESP0, SDC_RESP1, SDC_RESP2 and SDC_RESP3. For responses of other types, only bit 39 to 8 of the response token are stored in register field SDC_RESP0.
A0130040	SDC_CMDSTA	32	**SD memory card controller command status register** Contains the status of SD controller during command execution and that of SD bus protocol after command execution when the SD controller is configured as the host of SD memory card. The register will also be used as the interrupt source. The register is cleared when being read. Meanwhile, if interrupt is enabled and thus interrupt caused by the register is generated, reading the register will de-assert the interrupt.
A0130044	SDC_DATSTA	32	**SD memory card controller data status register** Contains the status of SD controller during data transfer on DAT line(s) when the SD controller is configured as the host of SD memory card. The register is also used as the interrupt source. The register is cleared when being read. Meanwhile, if interrupt is enabled and thus

This document contains information that is proprietary to MediaTek Inc.
Unauthorized reproduction or disclosure of this information in whole or in part is strictly prohibited.
MEDIATEK CONFIDENTIAL FOR dengzhenli@far-sightcombine.com USE ONLY

Address	Name	Width	Register function
			interrupt caused by the register is generated, reading the register will de-assert the interrupt.
A0130048	**SDC_CSTA**	32	**SD memory card status register** After commands with R1 and R1b response this register containing the status of the SD card, it will be used as the response interrupt source. In all register fields, logic high indicates error, and logic low indicates there is no error. The register is cleared when being read. Meanwhile, if interrupt is enabled and thus interrupt caused by the register is generated, reading the register will de-assert the interrupt.
A013004C	**SDC_IRQMASK0**	32	**SD memory card IRQ mask register 0** Contains parts of SD memory card interrupt mask register. See the descriptions of register SDC_IRQMASK1 for reference. The register masks interrupt sources from register SDC_CMDSTA and SDC_DATSTA. IRQMASK[3:0] is for SDC_CMDSTA, and IRQMASK[18:16] for SDC_DATSTA. Note that IRQMASK[18] masks SDC_DATSTA[9:2] together. '1' in some bits of the register masks the corresponding interrupt source with the same bit position. For example, if IRQMASK[0] is 1, then the interrupt source from register field CMDRDY of register SDC_CMDSTA will be masked. '0' in some bits does not cause interrupt mask on the corresponding interrupt source from register SDC_CMDSTA and SDC_DATSTA.
A0130050	**SDC_IRQMASK1**	32	**SD memory card IRQ mask register 1** Contains parts of SD memory card interrupt mask register. Registers SDC_IRQMASK1 and SDC_IRQMASK0 compose the SD memory card interrupt mask register. The register masks interrupt sources from register SDC_CSTA. '1' in some bits of the register masks the corresponding interrupt source with the same bit position. For example, if IRQMASK[63] is 1, then interrupt source from register field OUT_OF_RANGE of register SDC_ CSTA will be masked. '0' in some bit does not cause interrupt mask on the corresponding interrupt source from register SDC_CSTA.
A0130054	**SDIO_CFG**	32	**SDIO configuration register** Configures functions for SDIO.
A0130058	**SDIO_STA**	32	**SDIO status register** Identifies if thers is SDIO interrupt during the interrupt period on data line.
A0130080	**CLK_RED**	32	**CLK latch configuration register** Configures the MSDC sample data/response clock. *Note: When MSDC_IOCON[19] = 1, the host will latch response; otherwise MSDC FSM will handle the response from PAD directly.*
A0130098	**DAT_CHECKSUM**	32	**MSDC Rx data checksum register**

This document contains information that is proprietary to MediaTek Inc.
Unauthorized reproduction or disclosure of this information in whole or in part is strictly prohibited.
MEDIATEK CONFIDENTIAL FOR dengzhenli@far-sightmobile.com USE ONLY

Address	Name	Width	Register function
			Competes the checksum value of Rx read data

A0130000 MSDC_CFG SD Memory Card Controller Configuration Register 04000020

Bit	31	30	29	28	27	26	25	24	23	22	21	20	19	18	17	16
Name					**FIFOTHD**						**VDDPD**	**RCDEN**	**DIRQEN**	**PINEN**	**DMAEN**	**INTEN**
Type					RW						RW	RW	RW	RW	RW	RW
Reset					0		0	0			0	0	0	0	0	0
Bit	15	14	13	12	11	10	9	8	7	6	5	4	3	2	1	0
Name	**SCLKF**								**SCLKON**	**CRED**	**STDBY**	**CLKSRC**		**NOCRC**	**RST**	**MSDC**
Type	RW								RW	RW	RW	RW		RW	W1C	RW
Reset	0	0	0	0	0	0	0	0	0	0	1	0	0	0	0	0

Overview: For general configuration of the SD controller. Note that MSDC_CFG[31:16] can be accessed by 16-bit APB bus access.

Bit(s)	Mnemonic	Name	Description
27:24	**FIFOTHD**	FIFOTHD	**FIFO threshold** The register field determines when to issue a DMA request. For write transactions, DMA requests will be asserted if the number of free entries in FIFO are bigger than or equal to the value in the register field. For read transactions, DMA requests will be asserted if the number of valid entries in FIFO are bigger than or equal to the value in the register field. The register field must be set according to the setting of data transfer count in DMA burst mode. If single mode for DMA transfer is used, the register field shall be set to 0b0001. 0000: Invalid 0001: Threshold value is 1. 0010: Threshold value is 2. 0011~01111: ... 1000: Threshold value is 8. Others: Invalid
21	**VDDPD**	VDDPD	**Controls output pin VDDPD used for power saving** Output pin VDDPD controls the power for memory card. 0: Output pin VDDPD outputs logic low. The power for memory card will be turned off. 1: Output pin VDDPD outputs logic high. The power for memory card will be turned on.
20	**RCDEN**	RCDEN	**Controls output pin RCDEN used for card identification process when the controller is for SD memory card** Its output controls the pull-down resistor on the system board to connect to or disconnect from signal CD/DAT3. 0: The output pin RCDEN outputs logic low. 1: The output pin RCDEN outputs logic high.
19	**DIRQEN**	DIRQEN	**Enables data request interrupt** The register bit is used to control if data request is used as an interrupt source. 0: Data request is not used as an interrupt source. 1: Data request is used as an interrupt source.
18	**PINEN**	PINEN	**Enables pin interrupt** The register bit is used to control if the pin for card detection is used

This document contains information that is proprietary to MediaTek Inc.
Unauthorized reproduction or disclosure of this information in whole or in part is strictly prohibited.
MEDIATEK CONFIDENTIAL FOR dengzhenli@ fareastmobile.com USE ONLY

Bit(s)	Mnemonic	Name	Description
			as an interrupt source. 0: The pin for card detection is not used as an interrupt source. 1: The pin for card detection is used as an interrupt source.
17	**DMAEN**	DMAEN	**Enables DMA** *Note: If DMA capability is disabled, the application software must poll the status of register MSDC_STA to check on any data transfer request. If DMA is desired, the register bit must be set up before command register is written.* 0: DMA request induced by various conditions is disabled, no matter the controller is configured as the host of either SD memory card or memory stick. 1: DMA request induced by various conditions is enabled, no matter the controller is configured as the host of either SD memory card or memory stick.
16	**INTEN**	INTEN	**Enables interrupt** *Note: If interrupt capability is disabled, the application software must poll the status of register MSDC_STA to check on any interrupt request.* 0: Interrupt induced by various conditions is disabled, no matter the controller is configured as the host of either SD memory card or memory stick. 1: Interrupt induced by various conditions is enabled, no matter the controller is configured as the host of either SD memory card or memory stick.
15:8	**SCLKF**	SCLKF	**Controls clock frequency of serial clock on SD bus and denotes clock frequency of SD bus serial clock as fslave and clock frequency of the SD controller as fhost which is 98.3 or 96.2 MHz** *Note: The allowed maximum frequency of fslave is 49.15MHz.* While changing the clock rate, "1T clock period before change + 1T clock period after change" is required for HW signal to re-synchronize. 00000000b: fslave =(1/2)*fhost 00000001b: fslave = [1/(4*1)]*fhost 00000010b: fslave = [1/(4*2)]*fhost 00000011b: fslave = [1/(4*3)]*fhost 00000100b~111111110b: ... 11111111b: fslave = [1/(4*255)]*fhost
7	**SCLKON**	SCLKON	**Serial clock always on** For debugging. 0: Serial clock not always on 1: Serial clock always on
6	**CRED**	CRED	**Rising edge data** The register bit is used to determine the serial data input is latched at the falling edge or rising edge of the serial clock. The default setting is at the rising edge. If the serial data have bad timing, set the register bit to 1. When the memory card has bad timing on returned read data, set the register bit to 1. 0: Serial data input is latched at the rising edge of serial clock. 1: Serial data input is latched at the falling edge of serial clock.
5	**STDBY**	STDBY	**Standby mode** If the module is powered down, operating clock to the module will be stopped. At the same time, the clock to card detection circuitry will also be stopped. If detection on memory card insertion and removal is desired, write 1 to the register bit. If interrupt for detection on memory card insertion and removal is enabled, the interrupt will take

This document contains information that is proprietary to MediaTek Inc.
Unauthorized reproduction or disclosure of this information in whole or in part is strictly prohibited.
MEDIATEK CONFIDENTIAL FOR dengzhenli@ fanghteomobile.com USE ONLY

Bit(s)	Mnemonic	Name	Description
			place whenever the memory is inserted or removed. 0: Standby mode is disabled. 1: Standby mode is enabled.
4:3	**CLKSRC**	CLKSRC	**Specifies which clock is used as source clock of memory card** 00 : MPLL/5.5MHz clock 01 : MPLL/7MHz clock 10 : MPLL/8MHz clock 11 : MPLL/10MHz clock For phone 00 : 94.5MHz clock Need to keep BT_APP_DIV_EN= 1'b0 in CLK_CONDA[15]. 01 : 74.3MHz clock NOTE: Need to set POWERFUL_DIV_EN1 = 1'b1 first in CLK_CONDA[10]. 10 : 65MHz clock 11 : Forbidden For BT app. 00 : Forbidden 01 : 89.1MHz clock NOTE: Need to set POWERFUL_DIV_EN1 = 1'b1 first in CLK_CONDA[10]. 10 78MHz clock 11 : 62.4MHz clock NOTE: Need to set POWERFUL_DIV_EN2 = 1'b1 first in CLK_CONDA[9].
2	**NOCRC**	NOCRC	**Disable CRC** '1' indicates data transfer without CRC is desired. For write data block, the data are transmitted without CRC. For read data block, CRC will not be checked. For testing purpose. 0: Data transfer with CRC is desired. 1: Data transfer without CRC is desired.
1	**RST**	RST	**Software reset** Writing 1 to the register bit will cause internal synchronous reset of SD controller but will not reset register settings, RST should only be set when RST equal to 0. 0: Read 0 stands for the reset process is finished. 1: Write 1 to reset SD controller.
0	**MSDC**	MSDC	**Configures the controller as SD memory card mode** CLK/CMD/DAT line is pulled low when SD memory card mode is disable. 0: Disable SD memory card 1: Enable SD memory card

A0130004 MSDC_STA SD Memory Card Controller Status Register 00000000

Bit	31	30	29	28	27	26	25	24	23	22	21	20	19	18	17	16
Name																
Type																
Reset																
Bit	15	14	13	12	11	10	9	8	7	6	5	4	3	2	1	0
Name	**BUSY**	**FIFOCLR**							**FIFOCNT**				**INT**	**DRQ**	**BE**	**BF**
Type	R	W1C							RO				RO	RO	RO	RO
Reset	0	0							0	0	0	0	0	0	0	0

Overview: The register contains the status of FIFO, interrupts and data requests.

This document contains information that is proprietary to MediaTek Inc.
Unauthorized reproduction or disclosure of this information in whole or in part is strictly prohibited.
MEDIATEK CONFIDENTIAL FOR dengzhenli@ fanstartermobile.com USE ONLY

Bit(s)	Mnemonic	Name	Description
15	**BUSY**	BUSY	**Status of the controller** If the controller is in busy state, the register bit will be 1; otherwise 0. 0: The controller is in busy state. 1: The controller is in idle state.
14	**FIFOCLR**	FIFOCLR	**Clears FIFO** **Writing 1 to the register bit will cause the content of FIFO clear and reset the status of FIFO controller.** 0: Read 0 stands for the FIFO clear process is finished. 1: Write 1 to clear the content of FIFO clear and reset the status of FIFO controller.
7:4	**FIFOCNT**	FIFOCNT	**FIFO count** The register field shows how many valid entries are there in FIFO. 0000: 0 valid entry in FIFO 0001: 1 valid entry in FIFO 0010: 2 valid entries in FIFO 0011~0111: ... 1000: 8 valid entries in FIFO
3	**INT**	INT	**Indicates if there is any interrupt existing** When there is interrupt existing, the register bit will still be active even if register bit INTEN in register MSDC_CFG is disabled. The SD controller can interrupt MCU by issuing interrupt request to the interrupt controller, or the software/application will poll the register endlessly to check if there is any interrupt request existing in the SD controller. When register bit INTEN in register MSDC_CFG is disabled, the second method is used. For read commands, it is possible that time-out error takes place. The software can read the status register to check if the time-out error takes place without OS time tick support or data request asserted. *Note: The register bit will be cleared when register MSDC_INT is read.* 0: No interrupt request existing. 1: Interrupt request exists.
2	**DRQ**	DRQ	**Indicates if any data transfer is required** When a data transfer is required, the register bit will still be active even if register bit DIRQEN in register MSDC_CFG is disabled. Data transfer can be achieved by DMA channel alleviating MCU loading, or by polling the register bit to check if any data transfer is requested. When register bit DIRQEN in register MSDC_CFG is disabled, the second method is used. 0: No DMA request existing. 1: DMA request exists.
1	**BE**	BE	**Indicates if FIFO in SD controller is empty** 0: FIFO in SD controller is not empty. 1: FIFO in SD controller is empty.
0	**BF**	BF	**Indicates if FIFO in SD controller is full** 0: FIFO in SD controller is not full. 1: FIFO in SD controller is full.

A0130008 **MSDC_INT** **SD Memory Card Controller Interrupt Register** **00000000**

Bit	31	30	29	28	27	26	25	24	23	22	21	20	19	18	17	16
Name																
Type																

This document contains information that is proprietary to MediaTek Inc.
Unauthorized reproduction or disclosure of this information in whole or in part is strictly prohibited.
MEDIATEK CONFIDENTIAL FOR dengzhenli@ far-sightmobile.com USE ONLY

Reset																
Bit	15	14	13	12	11	10	9	8	7	6	5	4	3	2	1	0
Name									SDIOIRQ	SDR1BIRQ		SDMCIRQ	SDDATIRQ	SDCMDIRQ	PINIRQ	DIRQ
Type									RC	RC		RC	RC	RC	RC	RC
Reset									0	0		0	0	0	0	0

Overview: The register contains the status of interrupts. Note that the register still show status of interrupt even though interrupt is disabled, that is, register bit INTEN of register MSDC_CFG is set to 0. It implies that software interrupt can be implemented by polling register bit INT of register MSDC_STA and this register. However, if hardware interrupt is desired, be sure to clear the register before setting register bit INTEN of register MSDC_CFG to 1, or undesired hardware interrupt arisen from the previous interrupt status may take place.

Bit(s)	Mnemonic	Name	Description
7	**SDIOIRQ**	SDIOIRQ	**SDIO interrupt** The register bit indicates if there is any interrupt for SDIO existing. Whenever an interrupt for SDIO exists, the register bit will be set to 1 if the interrupt is enabled. It will be reset when the register is read. 0: No SDIO interrupt 1: Interrupt for SDIO exists.
6	**SDR1BIRQ**	SDR1BIRQ	**SD R1b response interrupt** The register bit will be active when a SD command with R1b response is finished and the DAT0 line is transited from busy to idle state. Single block write commands with R1b response will cause interrupt when the command is completed either successfully or with CRC error. However, multi-block write commands with R1b response do not cause interrupt because multi-block write commands are always stopped by STOP_TRANS commands. STOP_TRANS commands (with R1b response) behind multi-block write commands will cause interrupt. Single block read command with R1b response will cause interrupt when the command is completed, but multi-block read commands do not. *Note: STOP_TRANS commands (with R1b response) behind multi-block read commands will cause interrupt.* 0: No interrupt for SD R1b response. 1: Interrupt for SD R1b response exists.
4	**SDMCIRQ**	SDMCIRQ	**SD memory card interrupt** The register bit indicates if there is any interrupt for SD memory card existing. Whenever an interrupt for SD memory card exists, i.e. any bit in register SDC_CSTA is active, the register bit will be set to 1 if interrupt is enabled. It will be reset when the register is read. *Note: This bit will not trigger MSDC hardware interrupt.* 0: No SD memory card interrupt 1: SD memory card interrupt exists.
3	**SDDATIRQ**	SDDATIRQ	**SD bus DAT interrupt** The register bit indicates if there is any interrupt for SD DAT line existing. Whenever interrupt for SD DAT line exists, i.e. any bit in register SDC_ DATSTA is active, the register bit will be set to 1 if interrupt is enabled. It will be reset when the register is read. 0: No SD DAT line interrupt 1: SD DAT line interrupt exists.
2	**SDCMDIRQ**	SDCMDIRQ	**SD bus CMD interrupt** The register bit indicates if there is any interrupt for SD CMD line existing. Whenever interrupt for SD CMD line exists, i.e. any bit in the register SDC_CMDSTA is active, the register bit will be set to 1 if

This document contains information that is proprietary to MediaTek Inc.
Unauthorized reproduction or disclosure of this information in whole or in part is strictly prohibited.

MEDIATEK CONFIDENTIAL FOR dengzhenli@ far-lightmobile.com USE ONLY

Bit(s)	Mnemonic	Name	Description
			interrupt is enabled. It will be reset when the register is read. 0: No SD CMD line interrupt 1: SD CMD line interrupt exists.
1	**PINIRQ**	PINIRQ	**Pin change interrupt** The register bit indicates if there is any interrupt for memory card insertion/removal existing. Whenever the memory card is inserted or removed and card detection interrupt is enabled, i.e. register bit PINEN in register MSDC_CFG is set to 1, the register bit will be set to 1. It will be reset when the register is read. 0: Otherwise 1: Card is inserted or removed.
0	**DIRQ**	DIRQ	**Data request interrupt** The register bit indicates if there is any interrupt for data request existing. Whenever data request exists and data request as an interrupt source is enabled, i.e. register bit DIRQEN in register MSDC_CFG is set to 1, the register bit will be active. It will be reset when being read. For software, data requests can be recognized by polling register bit DRQ or by data request interrupt. Data request interrupts will be generated every FIFOTHD data transfers. 0: No data request interrupt 1: Data request interrupt occurs.

A013000C **MSDC_PS** **SD Memory Card Pin Status Register** **00000008**

Bit	31	30	29	28	27	26	25	24	23	22	21	20	19	18	17	16
Name								**CMD**	**DAT**							
Type								RO	RO							
Reset								0	0	0	0	0	0	0	0	0
Bit	15	14	13	12	11	10	9	8	7	6	5	4	3	2	1	0
Name	**CDDEBOUNCE**											**PINCHG**	**PIN0**	**POEN0**	**PIEN0**	**CDEN**
Type	RW											RC	RO	RW	RW	RW
Reset	0	0	0	0								0	1	0	0	0

Overview: The register is used for card detection. When the memory card controller and system are powered on, , the power for the memory card will still be off unless the power is supplied by the PMIC. Meanwhile, the pad for card detection defaults to pull-down when the system is powered on. The scheme of card detection for MS is the same as that for SD. To detect card insertion, first pull up the INS pin and then enable card detection and the input pin at the same time. After 32 cycles of controller clock, the status of pin changes will emerge. To detect card removal, simply keep enabling card detection and the input pin.

Bit(s)	Mnemonic	Name	Description
24	**CMD**	CMD	**Memory card/SDIO card/MMC card command lines**
23:16	**DAT**	DAT	**Memory card/SDIO card/MMC card data lines**
15:12	**CDDEBOUNCE**	CDDEBOUNCE	**Specifies the time interval for card detection de-bounce** Default value: 0. It means the de-bounce interval is 32-cycle time at 32kHz. The interval can extend one cycle time at 32kHz by increasing the counter by 1.
4	**PINCHG**	PINCHG	**Pin change** The register bit indicates the status of card insertion/removal. If the memory card is inserted or removed, the register bit will be set to 1 no matter pin change interrupt is enabled or not. It will be cleared when

MEDIATEK CONFIDENTIAL FOR dengzhenli@far-sightedmobile.com USE ONLY

This document contains information that is proprietary to MediaTek Inc.
Unauthorized reproduction or disclosure of this information in whole or in part is strictly prohibited.

Bit(s)	Mnemonic	Name	Description
			the register is read. 0: Otherwise 1: Card is inserted or removed.
3	**PIN0**	PIN0	**Shows the value of input pin for card detection** 0: The value of input pin for card detection is logic low. 1: The value of input pin for card detection is logic high.
2	**POEN0**	POEN0	**Controls output of input pin for card detection** 0: Output of input pin for card detection is disabled. 1: Output of input pin for card detection is enabled.
1	**PIEN0**	PIEN0	**Controls input pin for card detection** 0: Input pin for card detection is disabled. 1: Input pin for card detection is enabled.
0	**CDEN**	CDEN	**Enables card detection** The register bit is used to enable or disable card detection. 0: Card detection is disabled. 1: Card detection is enabled.

A0130010 MSDC_DAT SD Memory Card Controller Data Register 00000000

Bit	31	30	29	28	27	26	25	24	23	22	21	20	19	18	17	16
Name	DATA[31:16]															
Type	RW															
Reset	0	0	0	0	0	0	0	0	0	0	0	0	0	0	0	0
Bit	15	14	13	12	11	10	9	8	7	6	5	4	3	2	1	0
Name	DATA[15:0]															
Type	RW															
Reset	0	0	0	0	0	0	0	0	0	0	0	0	0	0	0	0

Overview: The register is used to read/write data from/to FIFO inside the SD controller. Data access unit: 32 bits.

Bit(s)	Mnemonic	Name	Description
31:0	**DATA**	DATA	**Reads/Writes data from/to FIFO inside SD controller** Data access unit: 32 bits

A0130014 MSDC_IOCON SD Memory Card Controller IO Control Register 010000C3

Bit	31	30	29	28	27	26	25	24	23	22	21	20	19	18	17	16
Name							SAMPLEDLY		FIXDLY		SAMPON	CRCDIS	CMDSEL	INTLH		DSW
Type							RW		RW		RW	RW	RW	RW		RW
Reset							0	1	0	0	0	0	0	0	0	0
Bit	15	14	13	12	11	10	9	8	7	6	5	4	3	2	1	0
Name	CMDRE					HIGH_SPEED	DMABURST		SRCFG1	SRCFG0	ODCCFG1			ODCCFG0		
Type	RW					RW	RW		RW	RW	RW			RW		
Reset	0					0	0	0	1	1	0	0	0	0	1	1

Overview: The register specifies the output driving capability and slew rate of IO pads for MSDC. The reset value is suggested setting. If the output driving capability of pins DAT0, DAT1, DAT2 and DAT3 is too large, it is possible

This document contains information that is proprietary to MediaTek Inc.
Unauthorized reproduction or disclosure of this information in whole or in part is strictly prohibited.

to arise ground bounce and thus result in glitch on SCLK. The actual driving current depends on the PAD type selected for the chip.

Bit(s)	Mnemonic	Name	Description
25:24	**SAMPLEDLY**	SAMPLEDLY	**Used for SW to select the turn-around delay cycle between write data end bit and CRC status for SD card** 00: 0-T delay 01: 1-T delay 10: 2-T delay 11: 3-T delay
23:22	**FIXDLY**	FIXDLY	**Used for SW to select the delay cycle after clock fix high for the host controller to SD card** 00: 0-T delay 01: 1-T delay 10: 2-T delay 11: 3-T delay
21	**SAMPON**	SAMPON	**Data sample enabling always on** The bit is suggested to be set to 1 when the feedback clock is used and to 0 when the multiple phase clock is used. 0: Data sample enabling not always on 1: Data sample enabling always on
20	**CRCDIS**	CRCDIS	**Switches off data CRC check for SD read data** 0: CRC check is on. 1: CRC check is off.
19	**CMDSEL**	CMDSEL	**Determines whether the host should delay 1-T to latch response from card** 0: Host latches response without 1-T delay 1: Host latches response with 1-T delay.
18:17	**INTLH**	INTLH	**Selects latch timing for SDIO multi-block read interrupt** 00: Host latches INT at the second backend clock after the end bit of the current data block from card is received. (Default) 01: Host latches INT at the first backend clock after the end bit of the current data block from card is received. 10: Host latches INT at the second backend clock after the end bit of the current data block from card is received. 11: Host latches INT at the third backend clock after the end bit of the current data block from card is received.
16	**DSW**	DSW	**Determines whether the host should latch data with 1-T delay or not** For SD card, this bit is suggested to be 0. For MSPRO cards, it is suggested to be 1. 0: Host latches the data with 1-T delay. 1: Host latches the data without 1-T delay.
15	**CMDRE**	CMDRE	**Determines whether the host should latch response token (sent from card on CMD line) at rising edge or falling edge of serial clock** (T.B.D this bit is un-useful) 0: Host latches response at rising edge of serial clock. 1: Host latches response at falling edge of serial clock.
10	**HIGH_SPEED**	HIGH_SPEED	**For high-speed mode when internal sample clock is used** High-speed mode means the SD/MMC serial bus clock rate is bigger than 25MHz. The default speed mode means that the SD/MMC serial bus clock rate is bigger than 25MHz. 0: Default speed

This document contains information that is proprietary to MediaTek Inc.
Unauthorized reproduction or disclosure of this information in whole or in part is strictly prohibited.
MEDIATEK CONFIDENTIAL FOR dengzhenli@ fanguitedmobile.com USE ONLY

Bit(s)	Mnemonic	Name	Description
			1: High speed
9:8	**DMABURST**	DMABURST	**Used for SW to select burst type when data are transferred by DMA** *Note: Only single mode can support non-4N bytes data transfer in read operation.* 00: Single mode 01: 4-beat incrementing burst 10: 8-beat incrementing burst 11: Reserved
7	**SRCFG1**	SRCFG1	**Output driving capability for pins DAT0, DAT1, DAT2 and DAT3** 0: Fast slew rate 1: Slow slew rate
6	**SRCFG0**	SRCFG0	**Output driving capability for pins CMD/BS and SCLK** 0: Fast slew rate 1: Slow slew rate
5:3	**ODCCFG1**	ODCCFG1	**Output driving capability for pins DAT0, DAT1, DAT2 and DAT3** 000: 4mA 001: 8mA 010: 12mA 011: 16mA
2:0	**ODCCFG0**	ODCCFG0	**Output driving capability for pins CMD/BS and SCLK** 000: 4mA 001: 8mA 010: 12mA 011: 16mA

A0130018 MSDC_IOCON1 SD Memory Card Controller IO Control Register 1 00022022

Bit	31	30	29	28	27	26	25	24	23	22	21	20	19	18	17	16
Name														PRCFG_RST/WP	PRVAL_RST/WP	
Type														RW	RW	
Reset														0	1	0
Bit	15	14	13	12	11	10	9	8	7	6	5	4	3	2	1	0
Name		PRCFG_CK	PRVAL_CK			PRCFG_CM	PRVAL_CM			PRCFG_DA	PRVAL_DA			PRCFG_INS	PRVAL_INS	
Type		RW	RW			RW	RW			RW	RW			RW	RW	
Reset		0	1	0		0	0	0		0	1	0		0	1	0

Bit(s)	Mnemonic	Name	Description
18	**PRCFG_RST/WP**	PRCFG_RST_WP	**Pull-up/down register configuration for pin RST/WP** Default value: 0 0: Pull-up resistor in the I/O pad of pin WP is enabled. 1: Pull-down resistor in the I/O pad of pin WP is enabled.
17:16	**PRVAL_RST/WP**	PRVAL_RST_WP	**Pull-up/down register value for pin RST/WP** Default value: 10 00: Pull–up/down resistor in the I/O pad of pin WP are all disabled. 01: Pull-up/down resistor in the I/O pad of pin WP value is 47k. 10: Pull-up/down resistor in the I/O pad of pin WP value is 47k. 11: Pull-up/down resistor in the I/O pad of pin WP value is 23.5k.
14	**PRCFG_CK**	PRCFG_CK	**Pull-up/down register configuration for pin CK** Default value: 0

This document contains information that is proprietary to MediaTek Inc.
Unauthorized reproduction or disclosure of this information in whole or in part is strictly prohibited.

Bit(s)	Mnemonic	Name	Description
			0: Pull-up resistor in the I/O pad of pin CK is enabled. 1: Pull-down resistor in the I/O pad of pin CK is enabled.
13:12	**PRVAL_CK**	PRVAL_CK	**Pull-up/down register value for pin CLK** Default value: 10 00: Pull-up/down resistor in the I/O pad of pin CLK are all disabled. 01: Pull-up/down resistor in the I/O pad of pin CLK value is 47k. 10: Pull-up/down resistor in the I/O pad of pin CLK value is 47k. 11: Pull-up/down resistor in the I/O pad of pin CLK value is 23.5k.
10	**PRCFG_CM**	PRCFG_CM	**Pull-up/down register configuration for pin CM** Default value is 0. 0: Pull-up resistor in the I/O pad of pin CM is enabled. 1: Pull-down resistor in the I/O pad of pin CM is enabled.
9:8	**PRVAL_CM**	PRVAL_CM	**Pull-up/down register value for pin CMD/BS** Default value: 00 00: Pull-up/down resistor in the I/O pad of pin CMD/BS are all disabled. 01: Pull-up/down resistor in the I/O pad of pin CMD/BS value is 47k. 10: Pull-up/down resistor in the I/O pad of pin CMD/BS value is 47k. 11: Pull-up/down resistor in the I/O pad of pin CMD/BS value is 23.5k.
6	**PRCFG_DA**	PRCFG_DA	**Pull-up/down register configuration for pin DAT0, DAT1, DAT2 and DAT3** Default value: 0 0: Pull-up resistor in the I/O pad of pin DAT is enabled. 1: Pull-down resistor in the I/O pad of pin DAT is enabled.
5:4	**PRVAL_DA**	PRVAL_DA	**Pull-up/down register value for pin DAT0, DAT1, DAT2 and DAT3** Default value: 10 00: Pull-up/ down resistor in the I/O pad of pin DAT are all disabled. 01: Pull-up/down resistor in the I/O pad of pin DAT value is 47k. 10: Pull-up/down resistor in the I/O pad of pin DAT value is 47k. 11: Pull-up/down resistor in the I/O pad of pin DAT value is 23.5k.
2	**PRCFG_INS**	PRCFG_INS	**Pull-up/down register configuration for pin INS** Default value: 0 0: Pull-up resistor in the I/O pad of pin WP is enabled. 1: Pull-down resistor in the I/O pad of pin WP is enabled.
1:0	**PRVAL_INS**	PRVAL_INS	**Pull-up/down register value for pin INS** Default value: 10 00: Pull-up/down resistor in the I/O pad of pin INS are all disabled. 01: Pull-up/down resistor in the I/O pad of pin INS value is 47k. 10: Pull-up/down resistor in the I/O pad of pin INS value is 47k. 11: Pull-up/down resistor in the I/O pad of pin INS value is 23.5k.

A0130020 **SDC_CFG** **SD Memory Card Controller Configuration Register** **00008000**

Bit	31	30	29	28	27	26	25	24	23	22	21	20	19	18	17	16
Name	DTOC								WDOD				SDIO		MDLEN	SIEN
Type	RW								RW				RW		RW	RW
Reset	0	0	0	0	0	0	0	0	0	0	0	0	0		0	0
Bit	15	14	13	12	11	10	9	8	7	6	5	4	3	2	1	0
Name	BSYDLY				BLKLEN											
Type	RW				RW											
Reset	1	0	0	0	0	0	0	0	0	0	0	0	0	0	0	0

This document contains information that is proprietary to MediaTek Inc.
Unauthorized reproduction or disclosure of this information in whole or in part is strictly prohibited.
MEDIATEK CONFIDENTIAL FOR dengzhenli@ farsightedmobile.com USE ONLY

Overview: The register is used to configure the SD memory card controller when it is configured as the host of SD. If the controller is configured as the host of memory stick, the contents of the register will have no impact on the operation of the controller. Note that SDC_CFG[31:16] can be accessed by 16-bit APB bus access.

Bit(s)	Mnemonic	Name	Description
31:24	**DTOC**	DTOC	**Data time-out counter** The period from finish of the initial host read command or the last read data block in a multiple block read operation to the start bit of the next read data block requires at least two serial clock cycles. The counter is used to extend the period (Read Data Access Time) in unit of 65,536 serial clock. See the register field descriptions of register bit RDINT for reference. 00000000: Extend 65,536 more serial clock cycles 00000001: Extend 65,536x2 more serial clock cycles 00000010: Extend 65,536x3 more serial clock cycles 00000011~11111110: ... 11111111: Extend 65,536x 256 more serial clock cycles
23:20	**WDOD**	WDOD	**Write data output delay** The period from finish of the response for the initial host write command or the last write data block in a multiple block write operation to the start bit of the next write data block requires at least two serial clock cycles. The register field is used to extend the period (Write Data Output Delay) in unit of one serial clock. 0000: No extension 0001: Extend 1 more serial clock cycle 0010: Extend 2 more serial clock cycles 0011~1110: ... 1111: Extend 15 more serial clock cycle
19	**SDIO**	SDIO	**Enables SDIO** 0: Disable SDIO mode 1: Enable SDIO mode
17	**MDLEN**	MDLEN	**Enables multiple data line** The register can be enabled only when SD memory card is applied and detected by software application. It is the responsibility of the application to program the bit correctly when an multi-media card is applied. If an multi-media card is applied and 4-bit data line is enabled, the 4 bits will be output every serial clock. Therefore, data integrity will fail. 0: Disable 4-bit data line 1: Enable 4-bit data line
16	**SIEN**	SIEN	**Enables serial interface** It should be enabled as soon as possible before any command. 0: Disable serial interface for SD 1: Enable serial interface for SD
15:12	**BSYDLY**	BSYDLY	**Only valid for the commands with R1b response** If the command has a response of R1b type, the SD controller must monitor the data line 0 for card busy status from the bit time that is two serial clock cycles after the command end bit to check if the operation in SD memory card have finished. The register field is used to expand the time between the command end bit and end of detection period to detect card busy status. If time is up and there is no card busy status on data line 0, the controller will abandon the detection. 0000: No extension 0001: Extend 1 more serial clock cycle 0010: Extend 2 more serial clock cycles

This document contains information that is proprietary to MediaTek Inc.
Unauthorized reproduction or disclosure of this information in whole or in part is strictly prohibited.
MEDIATEK CONFIDENTIAL FOR dengzhenli@fangtedmobile.com USE ONLY

Bit(s)	Mnemonic	Name	Description
			0011~1110: ... 1111: Extend 15 more serial clock cycle
11:0	**BLKLEN**	BLKLEN	**Block length** The register field is used to define the length of one block in unit of byte in a data transaction. The maximum value of block length is 2,048 bytes. 000000000000: Reserved 000000000001: Block length is 1 byte. 000000000010: Block length is 2 bytes. 000000000011~011111111110: ... 011111111111: Block length is 2,047 bytes. 100000000000: Block length is 2,048 bytes.

A0130024 **SDC_CMD** **SD Memory Card Controller Command Register** **00000000**

Bit	31	30	29	28	27	26	25	24	23	22	21	20	19	18	17	16
Name																**CMDFAIL**
Type																RW
Reset																0
Bit	15	14	13	12	11	10	9	8	7	6	5	4	3	2	1	0
Name	**INTC**	**STOP**	**RW**	**DTYPE**		**IDRT**	**RSPTYP**			**BREAK**	**CMD**					
Type	RW	RW	RW	RW		RW	RW			RW	RW					
Reset	0	0	0	0	0	0	0	0	0	0	0	0	0	0	0	0

Overview: The register defines a SD memory card command and its attribute. Before the SD controller issues a transaction onto the SD bus, application shall specify other relative settings such as argument for command. After application writes the register, the SD controller will issue the corresponding transaction onto the SD serial bus. If the command is GO_IDLE_STATE, the controller will have serial clock on SD bus run 128 cycles before issuing the command.

Bit(s)	Mnemonic	Name	Description
16	**CMDFAIL**	CMDFAIL	**If 4-bit SDIO mode is enabled and when CMD/DAT error occurrs, set this bit to select whether to "wait stop command" or "wait data state machine idle".** 0: Wait stop command 1: Wait data state machine idle
15	**INTC**	INTC	**Indicates if the command is GO_IRQ_STATE** If the command is GO_IRQ_STATE, the period between command token and response token will not be limited. 0: The command is not GO_IRQ_STATE. 1: The command is GO_IRQ_STATE.
14	**STOP**	STOP	**Indicates if the command is a stop transmission command** 0: The command is not a stop transmission command. 1: The command is a stop transmission command.
13	**RW**	RW	**Defines the command is a read command or write command** The register bit is valid only when the command causes a transaction with data token. 0: The command is a read command. 1: The command is a write command.
12:11	**DTYPE**	DTYPE	**Defines data token type for the command**

MEDIATEK CONFIDENTIAL FOR dengzhenli@ far-sightedmobile.com USE ONLY

This document contains information that is proprietary to MediaTek Inc.
Unauthorized reproduction or disclosure of this information in whole or in part is strictly prohibited.

Bit(s)	Mnemonic	Name	Description
			00: No data token for the command 01: Single block transaction 10: Multiple block transaction, i.e. the command is a multiple block read or write command. 11: Stream operation. It can only be used when an multi-media card is applied.
10	**IDRT**	IDRT	**Identification response time** The register bit indicates if the command has a response with NID (i.e. 5 serial clock cycles as defined in SD Memory Card Specification Part 1 Physical Layer Specification version 1.0) response time. The register bit is valid only when the command has a response token. Thus the register bit must be set to 1 for CMD2 (ALL_SEND_CID) and ACMD41 (SD_APP_OP_CMD). 0: Otherwise 1: The command has a response with NID response time.
9:7	**RSPTYP**	RSPTYP	**Defines response type for the command** For commands with R1 and R1b response, register SDC_CSTA (not SDC_STA) updates after response token is received. This register SDC_CSTA contains the status of the SD, and it can be used as a response interrupt source. *Note: If CMD7 is used with all 0's RCA, then RSPTYP must be "000". Command "GO_TO_IDLE" also has RSPTYP='000'.* 000: There is no response for the command, e.g. broadcast command without response and GO_INACTIVE_STATE command. 001: The command has R1 response. R1 response token is 48-bit. 010: The command has R2 response. R2 response token is 136-bit. 011: The command has R3 response. Even though R3 is 48-bit response, it does not contain CRC checksum. 100: The command has R4 response. R4 response token is 48-bit. (only for MMC) 101: The command has R5 response. R5 response token is 48-bit. (only for MMC) 110: The command has R6 response. R6 response token is 48-bit. 111: The command has R1b response. If the command has a response of R1b type, SD controller must monitor the data line 0 for card busy status from the bit time that is 2 or 4 serial clock cycles after the command end bit to check if the operation in SD memory card has finished. There are two cases for detection of card busy status. The first case is that the host stops the data transmission during an active write data transfer. The card will assert busy signal after the stop transmission command end bit followed by 4 serial clock cycles. The second case is that the card is in idle state or receiving a stop transmission command between data blocks when multiple block write command is in progress. The register bit will be valid only when the command has a response token.
6	**BREAK**	BREAK	**Aborts pending MMC GO_IRQ_MODE command** It is only valid for a pending GO_IRQ_MODE command waiting for MMC interrupt response. 0: Other fields are valid. 1: Break a pending MMC GO_IRQ_MODE command in the controller. Other fields are invalid.
5:0	**CMD**	CMD	**SD memory card command** Total 6 bits.

This document contains information that is proprietary to MediaTek Inc.
Unauthorized reproduction or disclosure of this information in whole or in part is strictly prohibited.
MEDIATEK CONFIDENTIAL FOR dengzheni@ famobile.com USE ONLY

A0130028 **SDC_ARG** **SD Memory Card Controller Argument Register** **00000000**

Bit	31	30	29	28	27	26	25	24	23	22	21	20	19	18	17	16
Name	ARG[31:16]															
Type	RW															
Reset	0	0	0	0	0	0	0	0	0	0	0	0	0	0	0	0
Bit	15	14	13	12	11	10	9	8	7	6	5	4	3	2	1	0
Name	ARG[15:0]															
Type	RW															
Reset	0	0	0	0	0	0	0	0	0	0	0	0	0	0	0	0

Overview: The register contains the argument of the SD memory card command.

Bit(s)	Mnemonic	Name	Description
31:0	**ARG**	ARG	Contains argument of the SD memory card command.

A013002C **SDC_STA** **SD Memory Card Controller Status Register** **00000000**

Bit	31	30	29	28	27	26	25	24	23	22	21	20	19	18	17	16
Name																
Type																
Reset																
Bit	15	14	13	12	11	10	9	8	7	6	5	4	3	2	1	0
Name	WP											FEDATBUSY	FECMDBUSY	BEDATBUSY	BECMDBUSY	BESDCBUSY
Type	RO											RO	RO	RO	RO	RO
Reset	0											0	0	0	0	0

Overview: The register contains various statuses of SD controller as the controller is configured as the host of SD memory card.

Bit(s)	Mnemonic	Name	Description
15	**WP**	WP	**Detects the status of write protection switch on SD memory card** The register bit shows the status of write protection switch on SD memory card. There is no default reset value. Pin WP (Write Protection) is only useful when the controller is configured for SD memory card. 1: Write protection switch on, i.e. memory card is desired to be write-protected. 0: Write protection switch off, i.e. memory card is writable.
4	**FEDATBUSY**	FEDATBUSY	**Indicates if there is any transmission going on DAT line on SD bus** This bit indicates directly the CMD line at card clock domain. For those commands without data but still involving DAT line, the register bit is useless. For example, if an erase command is issued, checking if the register bit is 0 before issuing the next command with data will not guarantee that the controller is idle. In this case, use register bit BESDCBUSY. 0: No transmission is going on DAT line on SD bus. 1: There is transmission going on DAT line on SD bus.
3	**FECMDBUSY**	FECMDBUSY	**Indicates if there is any transmission going on CMD line on SD bus** This bit indicates directly the CMD line at card clock domain. 0: No transmission is going on CMD line on SD bus.

This document contains information that is proprietary to MediaTek Inc.
Unauthorized reproduction or disclosure of this information in whole or in part is strictly prohibited.
MEDIATEK CONFIDENTIAL FOR dengzhenli@ far-sightedmobile.com USE ONLY

Bit(s)	Mnemonic	Name	Description
			1: There is transmission going on CMD line on SD bus.
2	**BEDATBUSY**	BEDATBUSY	**Indicates if there is any transmission going on DAT line on SD bus** 0: Backend SDC controller gets the info that no transmission is going on DAT line on SD bus. 1: Backend SDC controller gets the info that there is transmission going on DAT line on SD bus.
1	**BECMDBUSY**	BECMDBUSY	**Indicates if there is any transmission going on CMD line on SD bus** This bit shows backend controller's CMD busy state. The busy state is synced from card clock domain to bus clock domain. 0: Backend SDC controller gets the info that no transmission is going on CMD line on SD bus. 1: Backend SDC controller gets the info that there is transmission going on CMD line on SD bus.
0	**BESDCBUSY**	BESDCBUSY	**Indicates if SD controller is busy, i.e. is there any transmission going on CMD or DAT line on SD bus** This bit shows backend controller's SDC busy state. The busy state is synced from card clock domain to bus clock domain. 0: Backend SD controller is idle. 1: Backend SD controller is busy.

A0130030 SDC_RESP0 SD Memory Card Controller Response Register 0 00000000

Bit	31	30	29	28	27	26	25	24	23	22	21	20	19	18	17	16
Name	RESP[31:0][31:16]															
Type	RO															
Reset	0	0	0	0	0	0	0	0	0	0	0	0	0	0	0	0
Bit	15	14	13	12	11	10	9	8	7	6	5	4	3	2	1	0
Name	RESP[31:0][15:0]															
Type	RO															
Reset	0	0	0	0	0	0	0	0	0	0	0	0	0	0	0	0

Overview: The register contains parts of the last SD memory card bus response. See descriptions of register field SDC_RESP3.

Bit(s)	Mnemonic	Name	Description
31:0	**RESP[31:0]**	RESP_31_0	

A0130034 SDC_RESP1 SD Memory Card Controller Response Register 1 00000000

Bit	31	30	29	28	27	26	25	24	23	22	21	20	19	18	17	16
Name	RESP[63:32][31:16]															
Type	RO															
Reset	0	0	0	0	0	0	0	0	0	0	0	0	0	0	0	0
Bit	15	14	13	12	11	10	9	8	7	6	5	4	3	2	1	0
Name	RESP[63:32][15:0]															
Type	RO															
Reset	0	0	0	0	0	0	0	0	0	0	0	0	0	0	0	0

Overview: The register contains parts of the last SD memory card bus response. See descriptions of register field SDC_RESP3.

This document contains information that is proprietary to MediaTek Inc.
Unauthorized reproduction or disclosure of this information in whole or in part is strictly prohibited.
MEDIATEK CONFIDENTIAL FOR dengzhenli@far-sightedmobile.com USE ONLY

Bit(s)	Mnemonic	Name	Description
31:0	**RESP[63:32]**	RESP_63_32	

A0130038 SDC_RESP2 SD Memory Card Controller Response Register 2 00000000

Bit	31	30	29	28	27	26	25	24	23	22	21	20	19	18	17	16
Name	**RESP[95:64][31:16]**															
Type	RO															
Reset	0	0	0	0	0	0	0	0	0	0	0	0	0	0	0	0
Bit	15	14	13	12	11	10	9	8	7	6	5	4	3	2	1	0
Name	**RESP[95:64][15:0]**															
Type	RO															
Reset	0	0	0	0	0	0	0	0	0	0	0	0	0	0	0	0

Overview: The register contains parts of the last SD memory card bus response. See descriptions of register field SDC_RESP3.

Bit(s)	Mnemonic	Name	Description
31:0	**RESP[95:64]**	RESP_95_64	

A013003C SDC_RESP3 SD Memory Card Controller Response Register 3 00000000

Bit	31	30	29	28	27	26	25	24	23	22	21	20	19	18	17	16
Name	**RESP[127:96][31:16]**															
Type	RO															
Reset	0	0	0	0	0	0	0	0	0	0	0	0	0	0	0	0
Bit	15	14	13	12	11	10	9	8	7	6	5	4	3	2	1	0
Name	**RESP[127:96][15:0]**															
Type	RO															
Reset	0	0	0	0	0	0	0	0	0	0	0	0	0	0	0	0

Overview: The register contains parts of the last SD memory card bus response. Register fields SDC_RESP0, SDC_RESP1, SDC_RESP2 and SDC_RESP3 compose the last SD memory card bus response. For response of type R2, i.e. response of commands ALL_SEND_CID, SEND_CSD and SEND_CID, only bit 127 to 0 of the response token are stored in register fields SDC_RESP0, SDC_RESP1, SDC_RESP2 and SDC_RESP3. For response of other types, only bit 39 to 8 of the response token are stored in register field SDC_RESP0.

Bit(s)	Mnemonic	Name	Description
31:0	**RESP[127:96]**	RESP_127_96	

A0130040 SDC_CMDSTA SD Memory Card Controller Command Status Register 00000000

Bit	31	30	29	28	27	26	25	24	23	22	21	20	19	18	17	16
Name																
Type																
Reset																
Bit	15	14	13	12	11	10	9	8	7	6	5	4	3	2	1	0
Name														**RSPC**	**CMDT**	**CMDR**

This document contains information that is proprietary to MediaTek Inc.
Unauthorized reproduction or disclosure of this information in whole or in part is strictly prohibited.

														RCERR	O	DY
Type														RC	RC	RC
Reset														0	0	0

Overview: The register contains the status of SD controller during command execution and that of SD bus protocol after command execution when the SD controller is configured as the host of SD memory card. The register can also be used as an interrupt source. The register is cleared when being read. Meanwhile, if the interrupt is enabled and thus interrupt caused by the register is generated, reading the register will de-assert the interrupt.

Bit(s)	Mnemonic	Name	Description
2	**RSPCRCERR**	RSPCRCERR	**CRC error on CMD detected** '1' indicates the SD controller detects a CRC error after reading a response from the CMD line. 0: Otherwise 1: SD controller detects a CRC error after reading a response from the CMD line.
1	**CMDTO**	CMDTO	**Time-out on CMD detected** '1' indicates the SD controller detects a time-out condition while waiting for a response on the CMD line. 0: Otherwise 1: SD controller detects a timeout condition while waiting for a response on the CMD line.
0	**CMDRDY**	CMDRDY	**For command without response, the register bit will be 1 once the command is completed on SD bus** For command with response, the register bit will be 1 whenever the command is issued onto the SD bus and its corresponding response is received without CRC error. 0: Otherwise 1: Command with/without response is finished successfully without CRC error.

A0130044 **SDC_DATSTA** **SD Memory Card Controller Data Status Register** **00000000**

Bit	31	30	29	28	27	26	25	24	23	22	21	20	19	18	17	16
Name																
Type																
Reset																
Bit	15	14	13	12	11	10	9	8	7	6	5	4	3	2	1	0
Name							DATCRCERR								DATTO	BLKDONE
Type							RC								RC	RC
Reset							0	0	0	0	0	0	0	0	0	0

Overview: The register contains the status of SD controller during data transfer on DAT line(s) when the SD controller is configured as the host of SD memory card. The register can be used as an interrupt source. The register is cleared when being read. Meanwhile, if the interrupt is enabled and thus interrupt caused by the register is generated, reading the register will de-assert the interrupt.

Bit(s)	Mnemonic	Name	Description
9:2	**DATCRCERR**	DATCRCERR	**CRC error on DAT detected** '1' indicates that the SD controller detects a CRC error for bit n after

This document contains information that is proprietary to MediaTek Inc.
Unauthorized reproduction or disclosure of this information in whole or in part is strictly prohibited.

MEDIATEK CONFIDENTIAL FOR dengzhenli@far-signalmobile.com USE ONLY

Bit(s)	Mnemonic	Name	Description
			reading a block of data from the DAT line or SD signals a CRC error after writing a block of data to the DAT line. 0: Otherwise 1: SD controller detects a CRC error after reading a block of data from the DAT line or SD signals a CRC error after writing a block of data to the DAT line. *Note: n is 7 ~ 1 for 8-bits mode. Each bit is read and cleared individually.*
1	**DATTO**	DATTO	**Time-out on DAT detected** A '1' indicates that the SD controller detects a time-out condition while waiting for data token on the DAT line. 0: Otherwise 1: SD controller detects a time-out condition while waiting for data token on the DAT line.
0	**BLKDONE**	BLKDONE	**Indicates the status of data block transfer** 0: Otherwise 1: A data block is successfully transferred.

A0130048 SDC_CSTA SD Memory Card Status Register 00000000

Bit	31	30	29	28	27	26	25	24	23	22	21	20	19	18	17	16
Name	CSTA [31:0][31:16]															
Type	RC															
Reset	0	0	0	0	0	0	0	0	0	0	0	0	0	0	0	0
Bit	15	14	13	12	11	10	9	8	7	6	5	4	3	2	1	0
Name	CSTA [31:0][15:0]															
Type	RC															
Reset	0	0	0	0	0	0	0	0	0	0	0	0	0	0	0	0

Overview: After commands with R1 and R1b respond this register containing the status of the SD card, it will be used as a response interrupt source. In all register fields, logic high indicates error, and logic low indicates no error. The register is cleared when being read. Meanwhile, if the interrupt is enabled and thus interrupt caused by the register is generated, reading the register will de-assert the interrupt.

Bit(s)	Mnemonic	Name	Description
31:0	**CSTA [31:0]**	CSTA_31_0	CSTA31: OUT_OF_RANGE. The command's argument is out of the allowed range for this card. CSTA30: ADDRESS_ERROR. A misaligned address that does not match the block length is used in the command. CSTA29: BLOCK_LEN_ERROR. The transferred block length is not allowed for this card, or the number of transferred bytes does not match the block length. CSTA28: ERASE_SEQ_ERROR. An error in the sequence of erase commands occurs. CSTA27: ERASE_PARAM. An invalid selection of write-blocks for erase occurs. CSTA26: WP_VIOLATION. Attempt to program a write-protected block. CSTA25: Reserved. Return to 0. CSTA24: LOCK_UNLOCK_FAILED. Set when a sequence or password error is detected in lock/unlock card command or if there is an attempt to access a locked card. CSTA23: COM_CRC_ERROR. The CRC check of the previous

This document contains information that is proprietary to MediaTek Inc.
Unauthorized reproduction or disclosure of this information in whole or in part is strictly prohibited.
MEDIATEK CONFIDENTIAL FOR dengzhenli@ far-sightedmobile.com USE ONLY

command fails.
CSTA22: ILLEGAL_COMMAND. Command not legal for the card state.
CSTA21: CARD_ECC_FAILED. Card internal ECC is applied but fails to correct the data.
CSTA20: CC_ERROR. Internal card controller error.
CSTA19: ERROR. A general or unknown error occurs during the operation.
CSTA18: UNDERRUN. The card cannot sustain data transfer in stream read mode.
CSTA17: OVERRUN. The card cannot sustain data programming in stream write mode.
CSTA16: CID/CSD_OVERWRITE. It can be either one of the following errors: 1) The CID register has been already written and cannot be overwritten; 2) The read-only section of the CSD does not match the card; 3) An attempt to reverse the copy (set as the original) or permanent WP (unprotected) bits is made.
CSTA[15: 4]: Reserved. Return to 0.
CSTA3: AKE_SEQ_ERROR. Error in the sequence of authentication process
CSTA[2: 0]: Reserved. Return to 0.

A013004C **SDC_IRQMASK0** **SD Memory Card IRQ Mask Register 0** **00000000**

Bit	31	30	29	28	27	26	25	24	23	22	21	20	19	18	17	16
Name	**IRQMASK [31:0][31:16]**															
Type	RW															
Reset	0	0	0	0	0	0	0	0	0	0	0	0	0	0	0	0
Bit	15	14	13	12	11	10	9	8	7	6	5	4	3	2	1	0
Name	**IRQMASK [31:0][15:0]**															
Type	RW															
Reset	0	0	0	0	0	0	0	0	0	0	0	0	0	0	0	0

Overview: The register contains parts of SD memory card interrupt mask register. See the register descriptions of register SDC_IRQMASK1 for reference. The register masks interrupt sources from register SDC_CMDSTA and SDC_DATSTA. IRQMASK[3:0] is for SDC_CMDSTA, and IRQMASK[18:16] for SDC_DATSTA. Note that IRQMASK[18] masks SDC_DATSTA[9:2] together. '1' in some bits of the register masks the corresponding interrupt source with the same bit position. For example, if IRQMASK[0] is 1, then the interrupt source from register field CMDRDY of register SDC_CMDSTA will be masked. '0' in some bits does not cause interrupt mask on the corresponding interrupt source from registers SDC_CMDSTA and SDC_DATSTA.

Bit(s)	Mnemonic	Name	Description
31:0	**IRQMASK [31:0]**	IRQMASK_31_0	

A0130050 **SDC_IRQMASK1** **SD Memory Card IRQ Mask Register 1** **00000000**

Bit	31	30	29	28	27	26	25	24	23	22	21	20	19	18	17	16
Name	**IRQMASK [63:32][31:16]**															
Type	RW															
Reset	0	0	0	0	0	0	0	0	0	0	0	0	0	0	0	0
Bit	15	14	13	12	11	10	9	8	7	6	5	4	3	2	1	0

This document contains information that is proprietary to MediaTek Inc.
Unauthorized reproduction or disclosure of this information in whole or in part is strictly prohibited.

Name	IRQMASK [63:32][15:0]															
Type	RW															
Reset	0	0	0	0	0	0	0	0	0	0	0	0	0	0	0	0

Overview: The register contains parts of SD memory card interrupt mask register. Registers SDC_IRQMASK1 and SDC_IRQMASK0 compose the SD memory card interrupt mask register. The register masks interrupt sources from register SDC_CSTA. '1' in some bits of the register masks the corresponding interrupt source with the same bit position. For example, if IRQMASK[63] is 1, then the interrupt source from register field OUT_OF_RANGE of register SDC_ CSTA will be masked. '0' in some bits does not cause interrupt mask on the corresponding interrupt source from register SDC_CSTA.

Bit(s)	Mnemonic	Name	Description
31:0	**IRQMASK [63:32]**	IRQMASK_63_32	

A0130054 SDIO_CFG SDIO Configuration Register 00000000

Bit	31	30	29	28	27	26	25	24	23	22	21	20	19	18	17	16
Name																
Type																
Reset																
Bit	15	14	13	12	11	10	9	8	7	6	5	4	3	2	1	0
Name											**DISSEL**		**INTCSEL**	**DSBSEL**		**INTEN**
Type											RW		RW	RW		RW
Reset											0		0	0		0

Overview: The register is used to configure functions for SDIO.

Bit(s)	Mnemonic	Name	Description
5	**DISSEL**	DISSEL	**Selects data block interrupt source** 0: The host detects SDIO interrupt during interrupt period between two data blocks of multiple block data access. 1: The host ignores SDIO interrupt during interrupt period between two data blocks of multiple block data access.
3	**INTCSEL**	INTCSEL	**Selects interrupt control** 0: The host detects DAT1 low as SDIO interrupt. 1: The host detects DAT3/DAT2/DAT1/DAT0 4'b1101 as SDIO interrupt.
2	**DSBSEL**	DSBSEL	**Selects data block start bit** 0: Use data line 0 as start bit of data block. Other data lines are ignored. 1: Start bit of a data block is received only when all data line 0-3 become low.
0	**INTEN**	INTEN	**Enables interrupt for SDIO** 0: Disable 1: Enable

A0130058 SDIO_STA SDIO Status Register 00000000

Bit	31	30	29	28	27	26	25	24	23	22	21	20	19	18	17	16

This document contains information that is proprietary to MediaTek Inc.
Unauthorized reproduction or disclosure of this information in whole or in part is strictly prohibited.

Name																
Type																
Reset																
Bit	15	14	13	12	11	10	9	8	7	6	5	4	3	2	1	0
Name																IRQ
Type																RO
Reset																0

Overview: This register is used to identify if there is SDIO interrupt during the interrupt period on data line.

Bit(s)	Mnemonic	Name	Description
0	**IRQ**	IRQ	**SDIO interrupt exists on the data line.** For example, when in the interrupt period or the 1 -bit data line mode and DAT1/5 goes low from high, this bit will become 1 from 0. If DAT1/5 goes high from low, this bit will become 0 from 1. 0: There is no SDIO interrupt existing on the data line. 1: There is SDIO interrupt existing on the data line.

A0130080 CLK_RED CLK Latch Configuration Register 00000000

Bit	31	30	29	28	27	26	25	24	23	22	21	20	19	18	17	16
Name			CMD_RED													
Type			RW													
Reset			0													
Bit	15	14	13	12	11	10	9	8	7	6	5	4	3	2	1	0
Name			DAT_RED						CLKPAD_RED	CLK_LATCH						
Type			RW						RW	RW						
Reset			0						0	0						

Overview: The register is used to configure the MSDC sample data/response clock. Note that only when MSDC_IOCON[19] = 1 will the host latch response; otherwise MSDC FSM will handle the response from PAD directly.

Bit(s)	Mnemonic	Name	Description
29	**CMD_RED**	CMD_RED	**Determines the command response from card output is latched at falling edge or rising edge of internal clock** Only effective when CLK_LATCH = 1 0: Internal clock rising edge to latch response 1: Internal clock falling edge to latch response
13	**DAT_RED**	DAT_RED	**Determines the input data from card output is latched at falling edge or rising edge of internal sample clock** Only effective when CLK_LATCH = 1 0: Internal clock rising edge to latch data 1: Internal clock falling edge to latch data
7	**CLKPAD_RED**	CLKPAD_RED	**Determines the input data from card is latched at falling edge or rising edge of the feedback clock from pad** The suggested setting is 0 when SD serial clock is lower than 25MHz. The suggestion setting is 1 when SD serial clock is higher than 25MHz. The suggestion setting is 0 for MMC card no matter the serial clock rate is high speed or default speed. Only effective when CLK_LATCH = 0.

This document contains information that is proprietary to MediaTek Inc.
Unauthorized reproduction or disclosure of this information in whole or in part is strictly prohibited.
MEDIATEK CONFIDENTIAL FOR dengzhenli@far-sightedmobile.com USE ONLY

Bit(s)	Mnemonic	Name	Description
6	**CLK_LATCH**	CLK_LATCH	0: Internal feedback clock rising edge to latch data/response 1: Internal feedback clock falling edge to latch data/response **Determines which clock to latch data from card** The suggested setting is 1 if SCLKF in register field MSDC_CFG is 0x0. Otherwise, the suggested setting is 0. 0: Internal feedback clock is used to latch data/response from card. 1: Internal clock is used to latch data/response from card.

A0130098 **DAT_CHECKSUM** **MSDC Rx Data Checksum Register** **00000000**

Bit	31	30	29	28	27	26	25	24	23	22	21	20	19	18	17	16
Name	DAT_CHECKSUM[31:16]															
Type	RW															
Reset	0	0	0	0	0	0	0	0	0	0	0	0	0	0	0	0
Bit	15	14	13	12	11	10	9	8	7	6	5	4	3	2	1	0
Name	DAT_CHECKSUM[15:0]															
Type	RW															
Reset	0	0	0	0	0	0	0	0	0	0	0	0	0	0	0	0

Overview: The register is used to compete the checksum value of Rx read data

Bit(s)	Mnemonic	Name	Description
31:0	**DAT_CHECKSUM**	DAT_CHECKSUM	The checksum algorithm is 32-bit XOR.

3.17 SD Memory Card Controller (SDMC1)

3.17.1 Introduction

The controller fully supports the SD memory card bus protocol as defined in SD Memory Card Specification Part 1 Physical Layer Specification version 2.0.

Furthermore, the controller also partially supports the SDIO card specification version 2.0. However, the controller can only be configured as the host of the SD memory card. Hereafter, the controller is also abbreviated as the SD controller. The following are the main features of the controller.

- Interface with MCU by APB bus
- 16/32-bit access on APB bus
- 16/32-bit access for control registers
- 32-bit access for FIFO
- Built-in 32 bytes FIFO buffers for transmit and receive, FIFO is shared for transmit and receive
- Built-in CRC circuit
- CRC generation can be disabled
- DMA supported
- Interrupt capabilities

This document contains information that is proprietary to MediaTek Inc.
Unauthorized reproduction or disclosure of this information in whole or in part is strictly prohibited.
MEDIATEK CONFIDENTIAL FOR dengzhenli@far-sightedmobile.com USE ONLY

- Data rate up to 48 Mbps in serial mode, 48x4 Mbps in parallel model, the module is targeted at 48 MHz operating clock
- Serial clock rate on SD bus is programmable
- Card detection capabilities during sleep mode
- Controllability of power for memory card
- Does not support SPI mode for SD memory card
- Does not support multiple SD memory cards

3.17.2 Overview

3.17.2.1 Pin Assignment

The following lists pins required for the SD memory card. Table 51 shows how the pins are shared. Note that all I/O pads have embedded both pull-up and pull-down resistors because they are shared by the SD memory card. The pull-down resistors for these pins can be used for power saving. If optimal pull-up or pull-down resistors are required on the system board, all embedded pull-up and pull-down resistors can be disabled by programming the corresponding control registers. The VDDPD pin is used for power saving. Power for the SD memory card can be shut down by programming the corresponding control register. The WP (Write Protection) pin is used to detect the status of the Write Protection Switch on the SD memory card.

Table 52: Sharing of pins for SD memory card controller

No.	Name	Type	MMC	SD	Description
1	SD_CLK	O	CLK	CLK	Clock
2	SD_DAT3	I/O/PP	-	CD/DAT3	Data Line [Bit 3]
3	SD_DAT0	I/O/PP	DAT0	DAT0	Data Line [Bit 0]
4	SD_DAT1	I/O/PP	-	DAT1	Data Line [Bit 1]
5	SD_DAT2	I/O/PP	-	DAT2	Data Line [Bit 2]
6	SD_CMD	I/O/PP	CMD	CMD	Command Or Bus State
7	SD_PWRON	O	-	-	VDD ON/OFF
8	SD_WP	I		-	Write Protection Switch in SD
9	SD_INS	I	VSS2	VSS2	Card Detection

3.17.2.2 Card Detection

For SD memory card, detection of card insertion/removal by hardware is supported, and a dedicated pin “INS” is used to perform card insertion and removal for SD. The pin “INS” will be connected to the pin “VSS2” of a SD connector (see **Figure 46**).

This document contains information that is proprietary to MediaTek Inc.
Unauthorized reproduction or disclosure of this information in whole or in part is strictly prohibited.

MEDIATEK CONFIDENTIAL FOR dengzhenli@far-sightedmobile.com USE ONLY

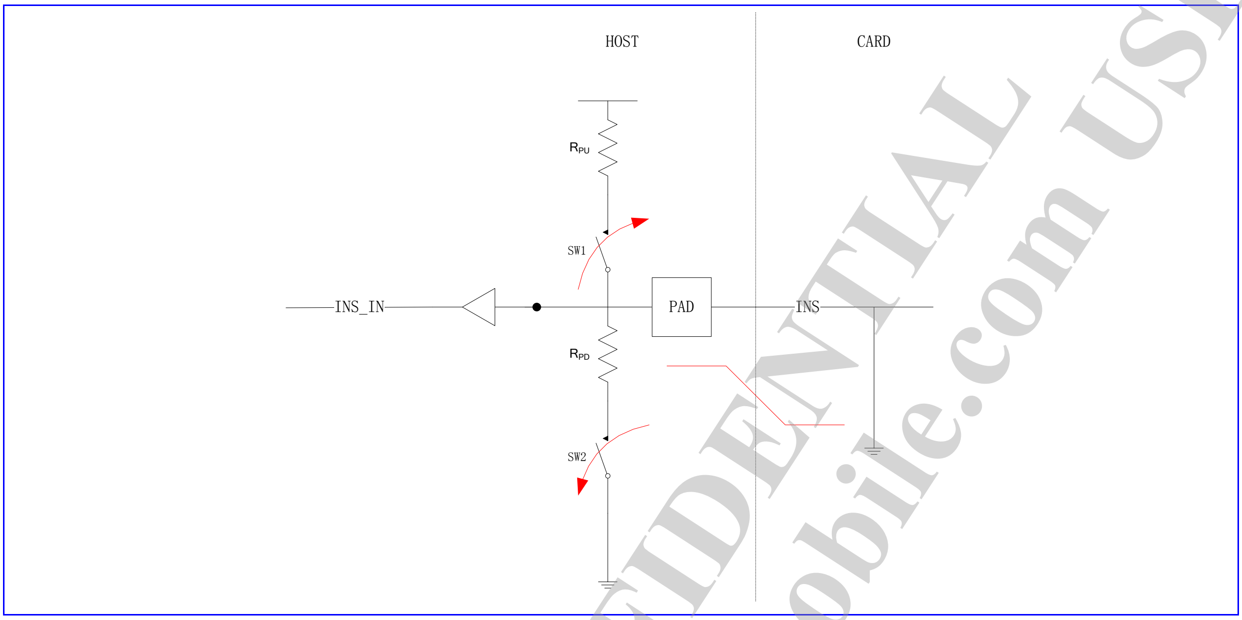

Figure 47. Card detection for SD memory card

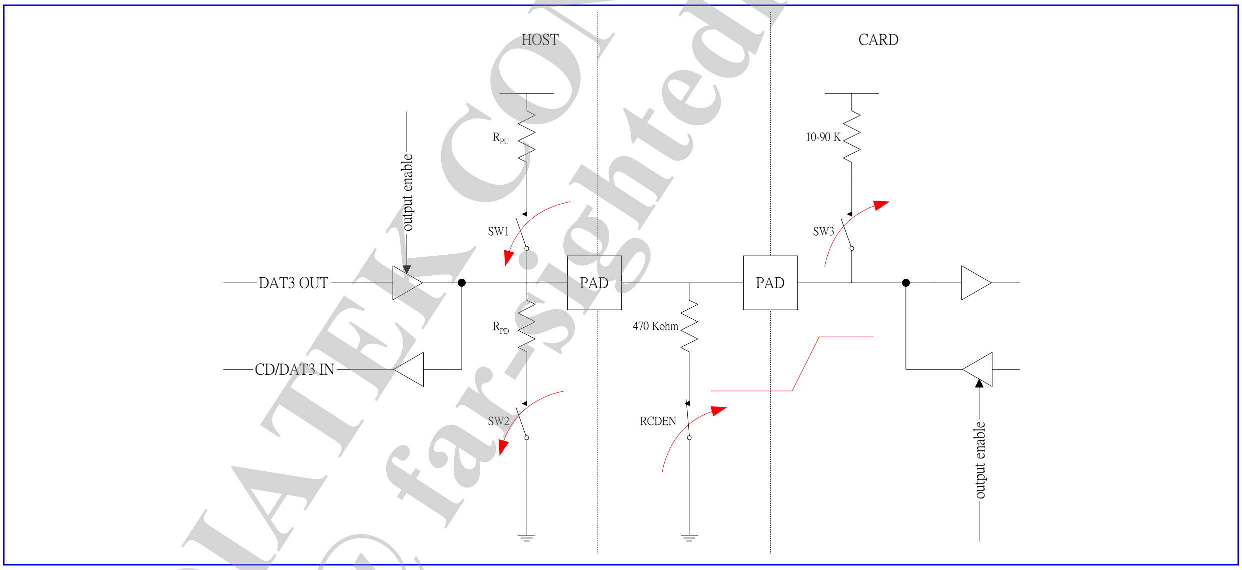

Figure 48. Card detection for SD memory card (Scheme 2)

3.17.3 Register Definition

Module name: MSDC1 base address: (+A0270000h)

Address	Name	Width	Register function
A0270000	MSDC_CFG	32	**SD memory card controller configuration register** For general configuration of the SD controller. *Note: MSDC_CFG[31:16] can be accessed by 16-bit APB bus access.*
A0270004	MSDC_STA	32	**SD memory card controller status register** Contains the status of FIFO, interrupts and data

This document contains information that is proprietary to MediaTek Inc.
Unauthorized reproduction or disclosure of this information in whole or in part is strictly prohibited.

MEDIATEK CONFIDENTIAL FOR dengzheng@ far-sightedmobile.com USE ONLY

Address	Name	Width	Register function
			requests.
A0270008	MSDC_INT	32	**SD memory card controller interrupt register** Contains the status of interrupts. Note that the register still shows the status of interrupt even though the interrupt is disabled, that is, register bit INTEN of register MSDC_CFG is set to 0. It implies that software interrupt can be implemented by polling register bit INT of register MSDC_STA and this register. However, if hardware interrupt is desired, be sure to clear the register before setting up register bit INTEN of register MSDC_CFG to 1, or undesired hardware interrupt arisen from the previous interrupt status may take place.
A027000C	MSDC_PS	32	**SD memory card pin status register** Used for card detection. When the memory card controller and system are powered on, the power for the memory card will still be off unless the power is supplied by the PMIC. Meanwhile, the pad for card detection defaults to pull down when the system is powered on. The scheme of card detection for MS is the same as that for SD. For detecting card insertion, first pull up the INS pin and then enable card detection and the input pin at the same time. After 32 cycles of controller clock, the status of pin changes will emerge. To detect card removal, simply keep enabling card detection and the input pin.
A0270010	MSDC_DAT	32	**SD memory card controller data register** Reads/Writes data from/to FIFO inside SD controller. Data access unit: 32 bits
A0270014	MSDC_IOCON	32	**SD memory card controller IO control register** Specifies output driving capability and slew rate of IO pads for MSDC. The reset value is suggested setting. If the output driving capability of pins DAT0, DAT1, DAT2 and DAT3 is too large, it is possible to arise ground bounce and thus result in glitch on SCLK. The actual driving current will depend on the PAD type selected for the chip.
A0270018	MSDC_IOCON1	32	**SD memory card controller IO control register 1**
A0270020	SDC_CFG	32	**SD memory card controller configuration register** Configures the SD memory card controller when it is configured as the host of SD. The register is used to configure the SD memory card controller when it is configured as the host of SD memory card. If the controller is configured as the host of memory stick, the contents of the register will have no impact on the operation of the controller. *Note: SDC_CFG[31:16] can be accessed by 16-bit APB bus access.*
A0270024	SDC_CMD	32	**SD memory card controller command register** Defines a SD memory card command and its attribute.

This document contains information that is proprietary to MediaTek Inc.
Unauthorized reproduction or disclosure of this information in whole or in part is strictly prohibited.
MEDIATEK CONFIDENTIAL FOR dengzhenli@ far-sighted mobile.com USE ONLY

Address	Name	Width	Register function
			Before the SD controller issues a transaction onto the SD bus, application shall specify other relative settings such as argument for command. After application writes the register, the SD controller will issue the corresponding transaction onto SD serial bus. If the command is GO_IDLE_STATE, the controller will have serial clock on SD bus run 128 cycles before issuing the command.
A0270028	**SDC_ARG**	32	**SD memory card controller argument register** Contains argument of the SD memory card command.
A027002C	**SDC_STA**	32	**SD memory card controller status register** Contains various statuses of SD controller as the controller is configured as the host of SD memory card.
A0270030	**SDC_RESP0**	32	**SD memory card controller response register 0** Contains parts of the last SD memory card bus response. See descriptions of register field SDC_RESP3.
A0270034	**SDC_RESP1**	32	**SD memory card controller response register 1** Contains parts of the last SD memory card bus response. See descriptions of register field SDC_RESP3.
A0270038	**SDC_RESP2**	32	**SD memory card controller response register 2** Contains parts of the last SD memory card bus response. See descriptions of register field SDC_RESP3.
A027003C	**SDC_RESP3**	32	**SD memory card controller response register 3** Contains parts of the last SD memory card bus response. Register fields SDC_RESP0, SDC_RESP1, SDC_RESP2 and SDC_RESP3 compose the last SD memory card bus response. For response of type R2, that is, response of the command ALL_SEND_CID, SEND_CSD and SEND_CID, only bit 127 to 0 of the response token are stored in register field SDC_RESP0, SDC_RESP1, SDC_RESP2 and SDC_RESP3. For responses of other types, only bit 39 to 8 of the response token are stored in register field SDC_RESP0.
A0270040	**SDC_CMDSTA**	32	**SD memory card controller command status register** Contains the status of SD controller during command execution and that of SD bus protocol after command execution when the SD controller is configured as the host of SD memory card. The register will also be used as the interrupt source. The register is cleared when being read. Meanwhile, if interrupt is enabled and thus interrupt caused by the register is generated, reading the register will de-assert the interrupt.
A0270044	**SDC_DATSTA**	32	**SD memory card controller data status register** Contains the status of SD controller during data transfer on DAT line(s) when the SD controller is configured as

This document contains information that is proprietary to MediaTek Inc.
Unauthorized reproduction or disclosure of this information in whole or in part is strictly prohibited.
MEDIATEK CONFIDENTIAL FOR dengzhenli@far-sightedmobile.com USE ONLY

Address	Name	Width	Register function
			the host of SD memory card. The register is also used as the interrupt source. The register is cleared when being read. Meanwhile, if interrupt is enabled and thus interrupt caused by the register is generated, reading the register will de-assert the interrupt.
A0270048	**SDC_CSTA**	32	**SD memory card status register** After commands with R1 and R1b response this register containing the status of the SD card, it will be used as the response interrupt source. In all register fields, logic high indicates error, and logic low indicates there is no error. The register is cleared when being read. Meanwhile, if interrupt is enabled and thus interrupt caused by the register is generated, reading the register will de-assert the interrupt.
A027004C	**SDC_IRQMASK0**	32	**SD memory card IRQ mask register 0** Contains parts of SD memory card interrupt mask register. See the descriptions of register SDC_IRQMASK1 for reference. The register masks interrupt sources from register SDC_CMDSTA and SDC_DATSTA. IRQMASK[3:0] is for SDC_CMDSTA, and IRQMASK[18:16] for SDC_DATSTA. Note that IRQMASK[18] masks SDC_DATSTA[9:2] together. ‘1’ in some bits of the register masks the corresponding interrupt source with the same bit position. For example, if IRQMASK[0] is 1, then the interrupt source from register field CMDRDY of register SDC_CMDSTA will be masked. '0' in some bits does not cause interrupt mask on the corresponding interrupt source from register SDC_CMDSTA and SDC_DATSTA.
A0270050	**SDC_IRQMASK1**	32	**SD memory card IRQ mask register 1** Contains parts of SD memory card interrupt mask register. Registers SDC_IRQMASK1 and SDC_IRQMASK0 compose the SD memory card interrupt mask register. The register masks interrupt sources from register SDC_CSTA. '1' in some bits of the register masks the corresponding interrupt source with the same bit position. For example, if IRQMASK[63] is 1, then interrupt source from register field OUT_OF_RANGE of register SDC_ CSTA will be masked. '0' in some bit does not cause interrupt mask on the corresponding interrupt source from register SDC_CSTA.
A0270054	**SDIO_CFG**	32	**SDIO configuration register** Configures functions for SDIO.
A0270058	**SDIO_STA**	32	**SDIO status register** Identifies if thers is SDIO interrupt during the interrupt period on data line.
A0270080	**CLK_RED**	32	**CLK latch configuration register** Configures the MSDC sample data/response clock. *Note: When MSDC_IOCON[19] = 1, the host will latch response; otherwise MSDC FSM will handle the*

This document contains information that is proprietary to MediaTek Inc.
Unauthorized reproduction or disclosure of this information in whole or in part is strictly prohibited.
MEDIATEK CONFIDENTIAL FOR dengzhenli@far-sightmobile.com USE ONLY

Address	Name	Width	Register function
			response from PAD directly.
A0270098	**DAT_CHECKSUM**	32	**MSDC Rx data checksum register** Competes the checksum value of Rx read data

A0270000 MSDC_CFG SD Memory Card Controller Configuration Register 04000020

Bit	31	30	29	28	27	26	25	24	23	22	21	20	19	18	17	16
Name					**FIFOTHD**						**VDDPD**	**RCDEN**	**DIRQEN**	**PINEN**	**DMAEN**	**INTEN**
Type					RW						RW	RW	RW	RW	RW	RW
Reset					0	1	0	0			0	0	0	0	0	0
Bit	15	14	13	12	11	10	9	8	7	6	5	4	3	2	1	0
Name	**SCLKF**								**SCLKON**	**CRED**	**STDBY**	**CLKSRC**		**NOCRC**	**RST**	**MSDC**
Type	RW								RW	RW	RW	RW		RW	W1C	RW
Reset	0	0	0	0	0	0	0	0	0	0	1	0	0	0	0	0

Overview: For general configuration of the SD controller. Note that MSDC_CFG[31:16] can be accessed by 16-bit APB bus access.

Bit(s)	Mnemonic	Name	Description
27:24	**FIFOTHD**	FIFOTHD	**FIFO threshold** The register field determines when to issue a DMA request. For write transactions, DMA requests will be asserted if the number of free entries in FIFO are bigger than or equal to the value in the register field. For read transactions, DMA requests will be asserted if the number of valid entries in FIFO are bigger than or equal to the value in the register field. The register field must be set according to the setting of data transfer count in DMA burst mode. If single mode for DMA transfer is used, the register field shall be set to 0b0001. 0000: Invalid 0001: Threshold value is 1. 0010: Threshold value is 2. 0011~01111: ... 1000: Threshold value is 8. Others: Invalid
21	**VDDPD**	VDDPD	**Controls output pin VDDPD used for power saving** Output pin VDDPD controls the power for memory card. 0: Output pin VDDPD outputs logic low. The power for memory card will be turned off. 1: Output pin VDDPD outputs logic high. The power for memory card will be turned on.
20	**RCDEN**	RCDEN	**Controls output pin RCDEN used for card identification process when the controller is for SD memory card** Its output controls the pull-down resistor on the system board to connect to or disconnect from signal CD/DAT3. 0: The output pin RCDEN outputs logic low. 1: The output pin RCDEN outputs logic high.
19	**DIRQEN**	DIRQEN	**Enables data request interrupt** The register bit is used to control if data request is used as an interrupt source. 0: Data request is not used as an interrupt source. 1: Data request is used as an interrupt source.

MEDIATEK CONFIDENTIAL FOR dengzhenli@ farsightedmobile.com USE ONLY

This document contains information that is proprietary to MediaTek Inc.
Unauthorized reproduction or disclosure of this information in whole or in part is strictly prohibited.

Bit(s)	Mnemonic	Name	Description
18	**PINEN**	PINEN	**Enables pin interrupt** The register bit is used to control if the pin for card detection is used as an interrupt source. 0: The pin for card detection is not used as an interrupt source. 1: The pin for card detection is used as an interrupt source.
17	**DMAEN**	DMAEN	**Enables DMA** *Note: If DMA capability is disabled, the application software must poll the status of register MSDC_STA to check on any data transfer request. If DMA is desired, the register bit must be set up before command register is written.* 0: DMA request induced by various conditions is disabled, no matter the controller is configured as the host of either SD memory card or memory stick. 1: DMA request induced by various conditions is enabled, no matter the controller is configured as the host of either SD memory card or memory stick.
16	**INTEN**	INTEN	**Enables interrupt** *Note: If interrupt capability is disabled, the application software must poll the status of register MSDC_STA to check on any interrupt request.* 0: Interrupt induced by various conditions is disabled, no matter the controller is configured as the host of either SD memory card or memory stick. 1: Interrupt induced by various conditions is enabled, no matter the controller is configured as the host of either SD memory card or memory stick.
15:8	**SCLKF**	SCLKF	**Controls clock frequency of serial clock on SD bus and denotes clock frequency of SD bus serial clock as fslave and clock frequency of the SD controller as fhost which is 98.3 or 96.2 MHz** *Note: The allowed maximum frequency of fslave is 49.15MHz.* While changing the clock rate, "1T clock period before change + 1T clock period after change" is required for HW signal to re-synchronize. 00000000b: fslave =(1/2)*fhost 00000001b: fslave = [1/(4*1)]*fhost 00000010b: fslave = [1/(4*2)]*fhost 00000011b: fslave = [1/(4*3)]*fhost 00000100b~111111110b: ... 11111111b: fslave = [1/(4*255)]*fhost
7	**SCLKON**	SCLKON	**Serial clock always on** For debugging. 0: Serial clock not always on 1: Serial clock always on
6	**CRED**	CRED	**Rising edge data** The register bit is used to determine the serial data input is latched at the falling edge or rising edge of the serial clock. The default setting is at the rising edge. If the serial data have bad timing, set the register bit to 1. When the memory card has bad timing on returned read data, set the register bit to 1. 0: Serial data input is latched at the rising edge of serial clock. 1: Serial data input is latched at the falling edge of serial clock.
5	**STDBY**	STDBY	**Standby mode** If the module is powered down, operating clock to the module will be stopped. At the same time, the clock to card detection circuitry will also be stopped. If detection on memory card insertion and removal

This document contains information that is proprietary to MediaTek Inc.
Unauthorized reproduction or disclosure of this information in whole or in part is strictly prohibited.
MEDIATEK CONFIDENTIAL FOR dengzhenii@ farsightedmobile.com USE ONLY

Bit(s)	Mnemonic	Name	Description
			is desired, write 1 to the register bit. If interrupt for detection on memory card insertion and removal is enabled, the interrupt will take place whenever the memory is inserted or removed. 0: Standby mode is disabled. 1: Standby mode is enabled.
4:3	**CLKSRC**	CLKSRC	**Specifies which clock is used as source clock of memory card** 00 : MPLL/5.5MHz clock 01 : MPLL/7MHz clock 10 : MPLL/8MHz clock 11 : MPLL/10MHz clock For phone 00 : 94.5MHz clock Need to keep BT_APP_DIV_EN= 1'b0 in CLK_CONDA[15]. 01 : 74.3MHz clock NOTE: Need to set POWERFUL_DIV_EN1 = 1'b1 first in CLK_CONDA[10]. 10 : 65MHz clock 11 : Forbidden For BT app. 00 : Forbidden 01 : 89.1MHz clock NOTE: Need to set POWERFUL_DIV_EN1 = 1'b1 first in CLK_CONDA[10]. 10 78MHz clock 11 : 62.4MHz clock NOTE: Need to set POWERFUL_DIV_EN2 = 1'b1 first in CLK_CONDA[9].
2	**NOCRC**	NOCRC	**Disable CRC** '1' indicates data transfer without CRC is desired. For write data block, the data are transmitted without CRC. For read data block, CRC will not be checked. For testing purpose. 0: Data transfer with CRC is desired. 1: Data transfer without CRC is desired.
1	**RST**	RST	**Software reset** Writing 1 to the register bit will cause internal synchronous reset of SD controller but will not reset register settings, RST should only be set when RST equal to 0. 0: Read 0 stands for the reset process is finished. 1: Write 1 to reset SD controller.
0	**MSDC**	MSDC	**Configures the controller as SD memory card mode** CLK/CMD/DAT line is pulled low when SD memory card mode is disable. 0: Disable SD memory card 1: Enable SD memory card

A0270004 **MSDC_STA** **SD Memory Card Controller Status Register** **00000000**

Bit	31	30	29	28	27	26	25	24	23	22	21	20	19	18	17	16
Name																
Type																
Reset																
Bit	15	14	13	12	11	10	9	8	7	6	5	4	3	2	1	0
Name	BUSY	FIFOCLR							FIFOCNT				INT	DRQ	BE	BF
Type	R	W1C							RO				RO	RO	RO	RO
Reset	0	0							0	0	0	0	0	0	0	0

Overview: The register contains the status of FIFO, interrupts and data requests.

This document contains information that is proprietary to MediaTek Inc.
Unauthorized reproduction or disclosure of this information in whole or in part is strictly prohibited.
MEDIATEK CONFIDENTIAL FOR dengzhenli@far-sightedmobile.com USE ONLY

Bit(s)	Mnemonic	Name	Description
15	**BUSY**	BUSY	**Status of the controller** If the controller is in busy state, the register bit will be 1; otherwise 0. 0: The controller is in busy state. 1: The controller is in idle state.
14	**FIFOCLR**	FIFOCLR	**Clears FIFO** **Writing 1 to the register bit will cause the content of FIFO clear and reset the status of FIFO controller.** 0: Read 0 stands for the FIFO clear process is finished. 1: Write 1 to clear the content of FIFO clear and reset the status of FIFO controller.
7:4	**FIFOCNT**	FIFOCNT	**FIFO count** The register field shows how many valid entries are there in FIFO. 0000: 0 valid entry in FIFO 0001: 1 valid entry in FIFO 0010: 2 valid entries in FIFO 0011~0111: ... 1000: 8 valid entries in FIFO
3	**INT**	INT	**Indicates if there is any interrupt existing** When there is interrupt existing, the register bit will still be active even if register bit INTEN in register MSDC_CFG is disabled. The SD controller can interrupt MCU by issuing interrupt request to the interrupt controller, or the software/application will poll the register endlessly to check if there is any interrupt request existing in the SD controller. When register bit INTEN in register MSDC_CFG is disabled, the second method is used. For read commands, it is possible that time-out error takes place. The software can read the status register to check if the time-out error takes place without OS time tick support or data request asserted. *Note: The register bit will be cleared when register MSDC_INT is read.* 0: No interrupt request existing. 1: Interrupt request exists.
2	**DRQ**	DRQ	**Indicates if any data transfer is required** When a data transfer is required, the register bit will still be active even if register bit DIRQEN in register MSDC_CFG is disabled. Data transfer can be achieved by DMA channel alleviating MCU loading, or by polling the register bit to check if any data transfer is requested. When register bit DIRQEN in register MSDC_CFG is disabled, the second method is used. 0: No DMA request existing. 1: DMA request exists.
1	**BE**	BE	**Indicates if FIFO in SD controller is empty** 0: FIFO in SD controller is not empty. 1: FIFO in SD controller is empty.
0	**BF**	BF	**Indicates if FIFO in SD controller is full** 0: FIFO in SD controller is not full. 1: FIFO in SD controller is full.

A0270008 **MSDC_INT** **SD Memory Card Controller Interrupt Register** **00000000**

Bit	31	30	29	28	27	26	25	24	23	22	21	20	19	18	17	16
Name																

This document contains information that is proprietary to MediaTek Inc.
Unauthorized reproduction or disclosure of this information in whole or in part is strictly prohibited.
MEDIATEK CONFIDENTIAL FOR USE ONLY dengzhenli@ far-sightedmobile.com

Type																
Reset																
Bit	15	14	13	12	11	10	9	8	7	6	5	4	3	2	1	0
Name									SDIOIRQ	SDR1BIRQ		SDMCIRQ	SDDATIRQ	SDCMDIRQ	PINIRQ	DIRQ
Type									RC	RC		RC	RC	RC	RC	RC
Reset									0	0		0	0	0	0	0

Overview: The register contains the status of interrupts. Note that the register still show status of interrupt even though interrupt is disabled, that is, register bit INTEN of register MSDC_CFG is set to 0. It implies that software interrupt can be implemented by polling register bit INT of register MSDC_STA and this register. However, if hardware interrupt is desired, be sure to clear the register before setting register bit INTEN of register MSDC_CFG to 1, or undesired hardware interrupt arisen from the previous interrupt status may take place.

Bit(s)	Mnemonic	Name	Description
7	**SDIOIRQ**	SDIOIRQ	**SDIO interrupt** The register bit indicates if there is any interrupt for SDIO existing. Whenever an interrupt for SDIO exists, the register bit will be set to 1 if the interrupt is enabled. It will be reset when the register is read. 0: No SDIO interrupt 1: Interrupt for SDIO exists.
6	**SDR1BIRQ**	SDR1BIRQ	**SD R1b response interrupt** The register bit will be active when a SD command with R1b response is finished and the DAT0 line is transited from busy to idle state. Single block write commands with R1b response will cause interrupt when the command is completed either successfully or with CRC error. However, multi-block write commands with R1b response do not cause interrupt because multi-block write commands are always stopped by STOP_TRANS commands. STOP_TRANS commands (with R1b response) behind multi-block write commands will cause interrupt. Single block read command with R1b response will cause interrupt when the command is completed, but multi-block read commands do not. *Note: STOP_TRANS commands (with R1b response) behind multi-block read commands will cause interrupt.* 0: No interrupt for SD R1b response. 1: Interrupt for SD R1b response exists.
4	**SDMCIRQ**	SDMCIRQ	**SD memory card interrupt** The register bit indicates if there is any interrupt for SD memory card existing. Whenever an interrupt for SD memory card exists, i.e. any bit in register SDC_CSTA is active, the register bit will be set to 1 if interrupt is enabled. It will be reset when the register is read. *Note: This bit will not trigger MSDC hardware interrupt.* 0: No SD memory card interrupt 1: SD memory card interrupt exists.
3	**SDDATIRQ**	SDDATIRQ	**SD bus DAT interrupt** The register bit indicates if there is any interrupt for SD DAT line existing. Whenever interrupt for SD DAT line exists, i.e. any bit in register SDC_ DATSTA is active, the register bit will be set to 1 if interrupt is enabled. It will be reset when the register is read. 0: No SD DAT line interrupt 1: SD DAT line interrupt exists.
2	**SDCMDIRQ**	SDCMDIRQ	**SD bus CMD interrupt** The register bit indicates if there is any interrupt for SD CMD line existing. Whenever interrupt for SD CMD line exists, i.e. any bit in the register SDC_CMDSTA is active, the register bit will be set to 1 if

This document contains information that is proprietary to MediaTek Inc.
Unauthorized reproduction or disclosure of this information in whole or in part is strictly prohibited.

MEDIATEK CONFIDENTIAL FOR dengzhenli@ fanstelmobile.com USE ONLY

Bit(s)	Mnemonic	Name	Description
			interrupt is enabled. It will be reset when the register is read. 0: No SD CMD line interrupt 1: SD CMD line interrupt exists.
1	**PINIRQ**	PINIRQ	**Pin change interrupt** The register bit indicates if there is any interrupt for memory card insertion/removal existing. Whenever the memory card is inserted or removed and card detection interrupt is enabled, i.e. register bit PINEN in register MSDC_CFG is set to 1, the register bit will be set to 1. It will be reset when the register is read. 0: Otherwise 1: Card is inserted or removed.
0	**DIRQ**	DIRQ	**Data request interrupt** The register bit indicates if there is any interrupt for data request existing. Whenever data request exists and data request as an interrupt source is enabled, i.e. register bit DIRQEN in register MSDC_CFG is set to 1, the register bit will be active. It will be reset when being read. For software, data requests can be recognized by polling register bit DRQ or by data request interrupt. Data request interrupts will be generated every FIFOTHD data transfers. 0: No data request interrupt 1: Data request interrupt occurs.

A027000C **MSDC_PS** **SD Memory Card Pin Status Register** **00000008**

Bit	31	30	29	28	27	26	25	24	23	22	21	20	19	18	17	16
Name								**CMD**	**DAT**							
Type								RO	RO							
Reset								0	0	0	0	0	0	0	0	0
Bit	15	14	13	12	11	10	9	8	7	6	5	4	3	2	1	0
Name	**CDDEBOUNCE**											**PINCHG**	**PIN0**	**POEN0**	**PIEN0**	**CDEN**
Type	RW											RC	RO	RW	RW	RW
Reset	0	0	0	0								0	1	0	0	0

Overview: The register is used for card detection. When the memory card controller and system are powered on, , the power for the memory card will still be off unless the power is supplied by the PMIC. Meanwhile, the pad for card detection defaults to pull-down when the system is powered on. The scheme of card detection for MS is the same as that for SD. To detect card insertion, first pull up the INS pin and then enable card detection and the input pin at the same time. After 32 cycles of controller clock, the status of pin changes will emerge. To detect card removal, simply keep enabling card detection and the input pin.

Bit(s)	Mnemonic	Name	Description
24	**CMD**	CMD	**Memory card/SDIO card/MMC card command lines**
23:16	**DAT**	DAT	**Memory card/SDIO card/MMC card data lines**
15:12	**CDDEBOUNCE**	CDDEBOUNCE	**Specifies the time interval for card detection de-bounce** Default value: 0. It means the de-bounce interval is 32-cycle time at 32kHz. The interval can extend one cycle time at 32kHz by increasing the counter by 1.
4	**PINCHG**	PINCHG	**Pin change** The register bit indicates the status of card insertion/removal. If the memory card is inserted or removed, the register bit will be set to 1 no matter pin change interrupt is enabled or not. It will be cleared when

MEDIATEK CONFIDENTIAL FOR dengzhen@far-sightedmobile.com USE ONLY

This document contains information that is proprietary to MediaTek Inc.
Unauthorized reproduction or disclosure of this information in whole or in part is strictly prohibited.

Bit(s)	Mnemonic	Name	Description
			the register is read. 0: Otherwise 1: Card is inserted or removed.
3	**PIN0**	PIN0	**Shows the value of input pin for card detection** 0: The value of input pin for card detection is logic low. 1: The value of input pin for card detection is logic high.
2	**POEN0**	POEN0	**Controls output of input pin for card detection** 0: Output of input pin for card detection is disabled. 1: Output of input pin for card detection is enabled.
1	**PIEN0**	PIEN0	**Controls input pin for card detection** 0: Input pin for card detection is disabled. 1: Input pin for card detection is enabled.
0	**CDEN**	CDEN	**Enables card detection** The register bit is used to enable or disable card detection. 0: Card detection is disabled. 1: Card detection is enabled.

A0270010 MSDC_DAT SD Memory Card Controller Data Register 00000000

Bit	31	30	29	28	27	26	25	24	23	22	21	20	19	18	17	16
Name	DATA[31:16]															
Type	RW															
Reset	0	0	0	0	0	0	0	0	0	0	0	0	0	0	0	0
Bit	15	14	13	12	11	10	9	8	7	6	5	4	3	2	1	0
Name	DATA[15:0]															
Type	RW															
Reset	0	0	0	0	0	0	0	0	0	0	0	0	0	0	0	0

Overview: The register is used to read/write data from/to FIFO inside the SD controller. Data access unit: 32 bits.

Bit(s)	Mnemonic	Name	Description
31:0	**DATA**	DATA	**Reads/Writes data from/to FIFO inside SD controller** Data access unit: 32 bits

A0270014 MSDC_IOCON SD Memory Card Controller IO Control Register 010000C3

Bit	31	30	29	28	27	26	25	24	23	22	21	20	19	18	17	16
Name							SAMPLEDLY		FIXDLY		SAMPON	CRCDIS	CMDSEL	INTLH		DSW
Type							RW		RW		RW	RW	RW	RW		RW
Reset							0	1	0	0	0	0	0	0	0	0
Bit	15	14	13	12	11	10	9	8	7	6	5	4	3	2	1	0
Name	CMDRE					HIGH_SPEED	DMABURST		SRCFG1	SRCFG0	ODCCFG1			ODCCFG0		
Type	RW					RW	RW		RW	RW	RW			RW		
Reset	0					0	0	0	1	1	0	0	0	0	1	1

Overview: The register specifies the output driving capability and slew rate of IO pads for MSDC. The reset value is suggested setting. If the output driving capability of pins DAT0, DAT1, DAT2 and DAT3 is too large, it is possible

MEDIATEK CONFIDENTIAL FOR dengzhenli@far-sightedmobile.com USE ONLY

This document contains information that is proprietary to MediaTek Inc.
Unauthorized reproduction or disclosure of this information in whole or in part is strictly prohibited.

to arise ground bounce and thus result in glitch on SCLK. The actual driving current depends on the PAD type selected for the chip.

Bit(s)	Mnemonic	Name	Description
25:24	**SAMPLEDLY**	SAMPLEDLY	**Used for SW to select the turn-around delay cycle between write data end bit and CRC status for SD card** 00: 0-T delay 01: 1-T delay 10: 2-T delay 11: 3-T delay
23:22	**FIXDLY**	FIXDLY	**Used for SW to select the delay cycle after clock fix high for the host controller to SD card** 00: 0-T delay 01: 1-T delay 10: 2-T delay 11: 3-T delay
21	**SAMPON**	SAMPON	**Data sample enabling always on** The bit is suggested to be set to 1 when the feedback clock is used and to 0 when the multiple phase clock is used. 0: Data sample enabling not always on 1: Data sample enabling always on
20	**CRCDIS**	CRCDIS	**Switches off data CRC check for SD read data** 0: CRC check is on. 1: CRC check is off.
19	**CMDSEL**	CMDSEL	**Determines whether the host should delay 1-T to latch response from card** 0: Host latches response without 1-T delay 1: Host latches response with 1-T delay.
18:17	**INTLH**	INTLH	**Selects latch timing for SDIO multi-block read interrupt** 00: Host latches INT at the second backend clock after the end bit of the current data block from card is received. (Default) 01: Host latches INT at the first backend clock after the end bit of the current data block from card is received. 10: Host latches INT at the second backend clock after the end bit of the current data block from card is received. 11: Host latches INT at the third backend clock after the end bit of the current data block from card is received.
16	**DSW**	DSW	**Determines whether the host should latch data with 1-T delay or not** For SD card, this bit is suggested to be 0. For MSPRO cards, it is suggested to be 1. 0: Host latches the data with 1-T delay. 1: Host latches the data without 1-T delay.
15	**CMDRE**	CMDRE	**Determines whether the host should latch response token (sent from card on CMD line) at rising edge or falling edge of serial clock** (T.B.D this bit is un-useful) 0: Host latches response at rising edge of serial clock. 1: Host latches response at falling edge of serial clock.
10	**HIGH_SPEED**	HIGH_SPEED	**For high-speed mode when internal sample clock is used** High-speed mode means the SD/MMC serial bus clock rate is bigger than 25MHz. The default speed mode means that the SD/MMC serial bus clock rate is bigger than 25MHz. 0: Default speed

This document contains information that is proprietary to MediaTek Inc.
Unauthorized reproduction or disclosure of this information in whole or in part is strictly prohibited.

MEDIATEK CONFIDENTIAL FOR dengzhenli@ fangtedmobile.com USE ONLY

Bit(s)	Mnemonic	Name	Description
			1: High speed
9:8	**DMABURST**	DMABURST	**Used for SW to select burst type when data are transferred by DMA** *Note: Only single mode can support non-4N bytes data transfer in read operation.* 00: Single mode 01: 4-beat incrementing burst 10: 8-beat incrementing burst 11: Reserved
7	**SRCFG1**	SRCFG1	**Output driving capability for pins DAT0, DAT1, DAT2 and DAT3** 0: Fast slew rate 1: Slow slew rate
6	**SRCFG0**	SRCFG0	**Output driving capability for pins CMD/BS and SCLK** 0: Fast slew rate 1: Slow slew rate
5:3	**ODCCFG1**	ODCCFG1	**Output driving capability for pins DAT0, DAT1, DAT2 and DAT3** 000: 4mA 001: 8mA 010: 12mA 011: 16mA
2:0	**ODCCFG0**	ODCCFG0	**Output driving capability for pins CMD/BS and SCLK** 000: 4mA 001: 8mA 010: 12mA 011: 16mA

A0270018 **MSDC_IOCON1** **SD Memory Card Controller IO Control Register 1** **00022022**

Bit	31	30	29	28	27	26	25	24	23	22	21	20	19	18	17	16
Name														**PRCFG_RST/WP**	**PRVAL_RST/WP**	
Type														RW	RW	
Reset														0	1	0
Bit	15	14	13	12	11	10	9	8	7	6	5	4	3	2	1	0
Name		**PRCFG_CK**	**PRVAL_CK**			**PRCFG_CM**	**PRVAL_CM**			**PRCFG_DA**	**PRVAL_DA**			**PRCFG_INS**	**PRVAL_INS**	
Type		RW	RW			RW	RW			RW	RW			RW	RW	
Reset		0	1	0		0	0	0		0	1	0		0	1	0

Bit(s)	Mnemonic	Name	Description
18	**PRCFG_RST/WP**	PRCFG_RST_WP	**Pull-up/down register configuration for pin RST/WP** Default value: 0 0: Pull-up resistor in the I/O pad of pin WP is enabled. 1: Pull-down resistor in the I/O pad of pin WP is enabled.
17:16	**PRVAL_RST/WP**	PRVAL_RST_WP	**Pull-up/down register value for pin RST/WP** Default value: 10 00: Pull–up/down resistor in the I/O pad of pin WP are all disabled. 01: Pull-up/down resistor in the I/O pad of pin WP value is 47k. 10: Pull-up/down resistor in the I/O pad of pin WP value is 47k. 11: Pull-up/down resistor in the I/O pad of pin WP value is 23.5k.

MEDIATEK CONFIDENTIAL FOR dengzhenli@far-sightedmobile.com USE ONLY

This document contains information that is proprietary to MediaTek Inc.
Unauthorized reproduction or disclosure of this information in whole or in part is strictly prohibited.

Bit(s)	Mnemonic	Name	Description
14	**PRCFG_CK**	PRCFG_CK	**Pull-up/down register configuration for pin CK** Default value: 0 0: Pull-up resistor in the I/O pad of pin CK is enabled. 1: Pull-down resistor in the I/O pad of pin CK is enabled.
13:12	**PRVAL_CK**	PRVAL_CK	**Pull-up/down register value for pin CLK** Default value: 10 00: Pull-up/down resistor in the I/O pad of pin CLK are all disabled. 01: Pull-up/down resistor in the I/O pad of pin CLK value is 47k. 10: Pull-up/down resistor in the I/O pad of pin CLK value is 47k. 11: Pull-up/down resistor in the I/O pad of pin CLK value is 23.5k.
10	**PRCFG_CM**	PRCFG_CM	**Pull-up/down register configuration for pin CM** Default value is 0. 0: Pull-up resistor in the I/O pad of pin CM is enabled. 1: Pull-down resistor in the I/O pad of pin CM is enabled.
9:8	**PRVAL_CM**	PRVAL_CM	**Pull-up/down register value for pin CMD/BS** Default value: 00 00: Pull-up/down resistor in the I/O pad of pin CMD/BS are all disabled. 01: Pull-up/down resistor in the I/O pad of pin CMD/BS value is 47k. 10: Pull-up/down resistor in the I/O pad of pin CMD/BS value is 47k. 11: Pull-up/down resistor in the I/O pad of pin CMD/BS value is 23.5k.
6	**PRCFG_DA**	PRCFG_DA	**Pull-up/down register configuration for pin DAT0, DAT1, DAT2 and DAT3** Default value: 0 0: Pull-up resistor in the I/O pad of pin DAT is enabled. 1: Pull-down resistor in the I/O pad of pin DAT is enabled.
5:4	**PRVAL_DA**	PRVAL_DA	**Pull-up/down register value for pin DAT0, DAT1, DAT2 and DAT3** Default value: 10 00: Pull-up/ down resistor in the I/O pad of pin DAT are all disabled. 01: Pull-up/down resistor in the I/O pad of pin DAT value is 47k. 10: Pull-up/down resistor in the I/O pad of pin DAT value is 47k. 11: Pull-up/down resistor in the I/O pad of pin DAT value is 23.5k.
2	**PRCFG_INS**	PRCFG_INS	**Pull-up/down register configuration for pin INS** Default value: 0 0: Pull-up resistor in the I/O pad of pin WP is enabled. 1: Pull-down resistor in the I/O pad of pin WP is enabled.
1:0	**PRVAL_INS**	PRVAL_INS	**Pull-up/down register value for pin INS** Default value: 10 00: Pull-up/down resistor in the I/O pad of pin INS are all disabled. 01: Pull-up/down resistor in the I/O pad of pin INS value is 47k. 10: Pull-up/down resistor in the I/O pad of pin INS value is 47k. 11: Pull-up/down resistor in the I/O pad of pin INS value is 23.5k.

A0270020 SDC_CFG SD Memory Card Controller Configuration Register 00008000

Bit	31	30	29	28	27	26	25	24	23	22	21	20	19	18	17	16
Name	DTOC								WDOD				SDIO		MDLEN	SIEN
Type	RW								RW				RW		RW	RW
Reset	0	0	0	0	0	0	0	0	0	0	0	0	0		0	0
Bit	15	14	13	12	11	10	9	8	7	6	5	4	3	2	1	0
Name	BSYDLY				BLKLEN											
Type	RW				RW											

This document contains information that is proprietary to MediaTek Inc.
Unauthorized reproduction or disclosure of this information in whole or in part is strictly prohibited.

Reset	1	0	0	0	0	0	0	0	0	0	0	0	0	0	0	0

Overview: The register is used to configure the SD memory card controller when it is configured as the host of SD. The register is used to configure the SD memory card controller when it is configured as the host of SD memory card. If the controller is configured as the host of memory stick, the contents of the register will have no impact on the operation of the controller. Note that SDC_CFG[31:16] can be accessed by 16-bit APB bus access.

Bit(s)	Mnemonic	Name	Description
31:24	**DTOC**	DTOC	**Data time-out counter** The period from finish of the initial host read command or the last read data block in a multiple block read operation to the start bit of the next read data block requires at least two serial clock cycles. The counter is used to extend the period (Read Data Access Time) in unit of 65,536 serial clock. See the register field descriptions of register bit RDINT for reference. 00000000: Extend 65,536 more serial clock cycles 00000001: Extend 65,536x2 more serial clock cycles 00000010: Extend 65,536x3 more serial clock cycles 00000011~11111110: ... 11111111: Extend 65,536x 256 more serial clock cycles
23:20	**WDOD**	WDOD	**Write data output delay** The period from finish of the response for the initial host write command or the last write data block in a multiple block write operation to the start bit of the next write data block requires at least two serial clock cycles. The register field is used to extend the period (Write Data Output Delay) in unit of one serial clock. 0000: No extension 0001: Extend 1 more serial clock cycle 0010: Extend 2 more serial clock cycles 0011~1110: ... 1111: Extend 15 more serial clock cycle
19	**SDIO**	SDIO	**Enables SDIO** 0: Disable SDIO mode 1: Enable SDIO mode
17	**MDLEN**	MDLEN	**Enables multiple data line** The register can be enabled only when SD memory card is applied and detected by software application. It is the responsibility of the application to program the bit correctly when an multi-media card is applied. If an multi-media card is applied and 4-bit data line is enabled, the 4 bits will be output every serial clock. Therefore, data integrity will fail. 0: Disable 4-bit data line 1: Enable 4-bit data line
16	**SIEN**	SIEN	**Enables serial interface** It should be enabled as soon as possible before any command. 0: Disable serial interface for SD 1: Enable serial interface for SD
15:12	**BSYDLY**	BSYDLY	**Only valid for the commands with R1b response** If the command has a response of R1b type, the SD controller must monitor the data line 0 for card busy status from the bit time that is two serial clock cycles after the command end bit to check if the operation in SD memory card have finished. The register field is used to expand the time between the command end bit and end of detection period to detect card busy status. If time is up and there is no card busy status on data line 0, the controller will abandon the

This document contains information that is proprietary to MediaTek Inc.
Unauthorized reproduction or disclosure of this information in whole or in part is strictly prohibited.

Bit(s)	Mnemonic	Name	Description
			detection. 0000: No extension 0001: Extend 1 more serial clock cycle 0010: Extend 2 more serial clock cycles 0011~1110: ... 1111: Extend 15 more serial clock cycle
11:0	**BLKLEN**	BLKLEN	**Block length** The register field is used to define the length of one block in unit of byte in a data transaction. The maximum value of block length is 2,048 bytes. 000000000000: Reserved 000000000001: Block length is 1 byte. 000000000010: Block length is 2 bytes. 000000000011~011111111110: ... 011111111111: Block length is 2,047 bytes. 100000000000: Block length is 2,048 bytes.

A0270024 **SDC_CMD** **SD Memory Card Controller Command Register** **00000000**

Bit	31	30	29	28	27	26	25	24	23	22	21	20	19	18	17	16
Name																**CMDFAIL**
Type																RW
Reset																0
Bit	15	14	13	12	11	10	9	8	7	6	5	4	3	2	1	0
Name	**INTC**	**STOP**	**RW**	**DTYPE**		**IDRT**	**RSPTYP**			**BREAK**	**CMD**					
Type	RW	RW	RW	RW		RW	RW			RW	RW					
Reset	0	0	0	0	0	0	0	0	0	0	0	0	0	0	0	0

Overview: The register defines a SD memory card command and its attribute. Before the SD controller issues a transaction onto the SD bus, application shall specify other relative settings such as argument for command. After application writes the register, the SD controller will issue the corresponding transaction onto the SD serial bus. If the command is GO_IDLE_STATE, the controller will have serial clock on SD bus run 128 cycles before issuing the command.

Bit(s)	Mnemonic	Name	Description
16	**CMDFAIL**	CMDFAIL	**If 4-bit SDIO mode is enabled and when CMD/DAT error occurrs, set this bit to select whether to "wait stop command" or "wait data state machine idle".** 0: Wait stop command 1: Wait data state machine idle
15	**INTC**	INTC	**Indicates if the command is GO_IRQ_STATE** If the command is GO_IRQ_STATE, the period between command token and response token will not be limited. 0: The command is not GO_IRQ_STATE. 1: The command is GO_IRQ_STATE.
14	**STOP**	STOP	**Indicates if the command is a stop transmission command** 0: The command is not a stop transmission command. 1: The command is a stop transmission command.
13	**RW**	RW	**Defines the command is a read command or write command** The register bit is valid only when the command causes a transaction

MEDIATEK CONFIDENTIAL
FOR dengzhenli@ far-sightedmobile.com USE ONLY

This document contains information that is proprietary to MediaTek Inc.
Unauthorized reproduction or disclosure of this information in whole or in part is strictly prohibited.

Bit(s)	Mnemonic	Name	Description
			with data token. 0: The command is a read command. 1: The command is a write command.
12:11	**DTYPE**	DTYPE	**Defines data token type for the command** 00: No data token for the command 01: Single block transaction 10: Multiple block transaction, i.e. the command is a multiple block read or write command. 11: Stream operation. It can only be used when an multi-media card is applied.
10	**IDRT**	IDRT	**Identification response time** The register bit indicates if the command has a response with NID (i.e. 5 serial clock cycles as defined in SD Memory Card Specification Part 1 Physical Layer Specification version 1.0) response time. The register bit is valid only when the command has a response token. Thus the register bit must be set to 1 for CMD2 (ALL_SEND_CID) and ACMD41 (SD_APP_OP_CMD). 0: Otherwise 1: The command has a response with NID response time.
9:7	**RSPTYP**	RSPTYP	**Defines response type for the command** For commands with R1 and R1b response, register SDC_CSTA (not SDC_STA) updates after response token is received. This register SDC_CSTA contains the status of the SD, and it can be used as a response interrupt source. *Note: If CMD7 is used with all 0's RCA, then RSPTYP must be "000". Command "GO_TO_IDLE" also has RSPTYP='000'.* 000: There is no response for the command, e.g. broadcast command without response and GO_INACTIVE_STATE command. 001: The command has R1 response. R1 response token is 48-bit. 010: The command has R2 response. R2 response token is 136-bit. 011: The command has R3 response. Even though R3 is 48-bit response, it does not contain CRC checksum. 100: The command has R4 response. R4 response token is 48-bit. (only for MMC) 101: The command has R5 response. R5 response token is 48-bit. (only for MMC) 110: The command has R6 response. R6 response token is 48-bit. 111: The command has R1b response. If the command has a response of R1b type, SD controller must monitor the data line 0 for card busy status from the bit time that is 2 or 4 serial clock cycles after the command end bit to check if the operation in SD memory card has finished. There are two cases for detection of card busy status. The first case is that the host stops the data transmission during an active write data transfer. The card will assert busy signal after the stop transmission command end bit followed by 4 serial clock cycles. The second case is that the card is in idle state or receiving a stop transmission command between data blocks when multiple block write command is in progress. The register bit will be valid only when the command has a response token.
6	**BREAK**	BREAK	**Aborts pending MMC GO_IRQ_MODE command** It is only valid for a pending GO_IRQ_MODE command waiting for MMC interrupt response. 0: Other fields are valid. 1: Break a pending MMC GO_IRQ_MODE command in the controller. Other fields are invalid.
5:0	**CMD**	CMD	**SD memory card command**

This document contains information that is proprietary to MediaTek Inc.
Unauthorized reproduction or disclosure of this information in whole or in part is strictly prohibited.
MEDIATEK CONFIDENTIAL FOR dengzhenli@ farsightmobile.com USE ONLY

Bit(s)	Mnemonic	Name	Description
			Total 6 bits.

A0270028 SDC_ARG SD Memory Card Controller Argument Register 00000000

Bit	31	30	29	28	27	26	25	24	23	22	21	20	19	18	17	16
Name	ARG[31:16]															
Type	RW															
Reset	0	0	0	0	0	0	0	0	0	0	0	0	0	0	0	0
Bit	15	14	13	12	11	10	9	8	7	6	5	4	3	2	1	0
Name	ARG[15:0]															
Type	RW															
Reset	0	0	0	0	0	0	0	0	0	0	0	0	0	0	0	0

Overview: The register contains the argument of the SD memory card command.

Bit(s)	Mnemonic	Name	Description
31:0	**ARG**	ARG	Contains argument of the SD memory card command.

A027002C SDC_STA SD Memory Card Controller Status Register 00000000

Bit	31	30	29	28	27	26	25	24	23	22	21	20	19	18	17	16
Name																
Type																
Reset																
Bit	15	14	13	12	11	10	9	8	7	6	5	4	3	2	1	0
Name	WP											FEDATBUSY	FECMDBUSY	BEDATBUSY	BECMDBUSY	BESDCBUSY
Type	RO											RO	RO	RO	RO	RO
Reset	0											0	0	0	0	0

Overview: The register contains various statuses of SD controller as the controller is configured as the host of SD memory card.

Bit(s)	Mnemonic	Name	Description
15	**WP**	WP	**Detects the status of write protection switch on SD memory card** The register bit shows the status of write protection switch on SD memory card. There is no default reset value. Pin WP (Write Protection) is only useful when the controller is configured for SD memory card. 1: Write protection switch on, i.e. memory card is desired to be write-protected. 0: Write protection switch off, i.e. memory card is writable.
4	**FEDATBUSY**	FEDATBUSY	**Indicates if there is any transmission going on DAT line on SD bus** This bit indicates directly the CMD line at card clock domain. For those commands without data but still involving DAT line, the register bit is useless. For example, if an erase command is issued, checking if the register bit is 0 before issuing the next command with data will not guarantee that the controller is idle. In this case, use register bit BESDCBUSY. 0: No transmission is going on DAT line on SD bus.

This document contains information that is proprietary to MediaTek Inc.
Unauthorized reproduction or disclosure of this information in whole or in part is strictly prohibited.
MEDIATEK CONFIDENTIAL FOR dengzhenli@ far-sightedmobile.com USE ONLY

Bit(s)	Mnemonic	Name	Description
			1: There is transmission going on DAT line on SD bus.
3	**FECMDBUSY**	FECMDBUSY	**Indicates if there is any transmission going on CMD line on SD bus** This bit indicates directly the CMD line at card clock domain. 0: No transmission is going on CMD line on SD bus. 1: There is transmission going on CMD line on SD bus.
2	**BEDATBUSY**	BEDATBUSY	**Indicates if there is any transmission going on DAT line on SD bus** 0: Backend SDC controller gets the info that no transmission is going on DAT line on SD bus. 1: Backend SDC controller gets the info that there is transmission going on DAT line on SD bus.
1	**BECMDBUSY**	BECMDBUSY	**Indicates if there is any transmission going on CMD line on SD bus** This bit shows backend controller's CMD busy state. The busy state is synced from card clock domain to bus clock domain. 0: Backend SDC controller gets the info that no transmission is going on CMD line on SD bus. 1: Backend SDC controller gets the info that there is transmission going on CMD line on SD bus.
0	**BESDCBUSY**	BESDCBUSY	**Indicates if SD controller is busy, i.e. is there any transmission going on CMD or DAT line on SD bus** This bit shows backend controller's SDC busy state. The busy state is synced from card clock domain to bus clock domain. 0: Backend SD controller is idle. 1: Backend SD controller is busy.

A0270030 SDC_RESP0 SD Memory Card Controller Response Register 0 00000000

Bit	31	30	29	28	27	26	25	24	23	22	21	20	19	18	17	16
Name	RESP[31:0][31:16]															
Type	RO															
Reset	0	0	0	0	0	0	0	0	0	0	0	0	0	0	0	0
Bit	15	14	13	12	11	10	9	8	7	6	5	4	3	2	1	0
Name	RESP[31:0][15:0]															
Type	RO															
Reset	0	0	0	0	0	0	0	0	0	0	0	0	0	0	0	0

Overview: The register contains parts of the last SD memory card bus response. See descriptions of register field SDC_RESP3.

Bit(s)	Mnemonic	Name	Description
31:0	**RESP[31:0]**	RESP_31_0	

A0270034 SDC_RESP1 SD Memory Card Controller Response Register 1 00000000

Bit	31	30	29	28	27	26	25	24	23	22	21	20	19	18	17	16
Name	RESP[63:32][31:16]															
Type	RO															
Reset	0	0	0	0	0	0	0	0	0	0	0	0	0	0	0	0
Bit	15	14	13	12	11	10	9	8	7	6	5	4	3	2	1	0

This document contains information that is proprietary to MediaTek Inc.
Unauthorized reproduction or disclosure of this information in whole or in part is strictly prohibited.
MEDIATEK CONFIDENTIAL FOR dengzhenli@far-sightmobile.com USE ONLY

Name	RESP[63:32][15:0]															
Type	RO															
Reset	0	0	0	0	0	0	0	0	0	0	0	0	0	0	0	0

Overview: The register contains parts of the last SD memory card bus response. See descriptions of register field SDC_RESP3.

Bit(s)	Mnemonic	Name	Description
31:0	**RESP[63:32]**	RESP_63_32	

A0270038 SDC_RESP2 SD Memory Card Controller Response Register 2 00000000

Bit	31	30	29	28	27	26	25	24	23	22	21	20	19	18	17	16
Name	RESP[95:64][31:16]															
Type	RO															
Reset	0	0	0	0	0	0	0	0	0	0	0	0	0	0	0	0
Bit	15	14	13	12	11	10	9	8	7	6	5	4	3	2	1	0
Name	RESP[95:64][15:0]															
Type	RO															
Reset	0	0	0	0	0	0	0	0	0	0	0	0	0	0	0	0

Overview: The register contains parts of the last SD memory card bus response. See descriptions of register field SDC_RESP3.

Bit(s)	Mnemonic	Name	Description
31:0	**RESP[95:64]**	RESP_95_64	

A027003C SDC_RESP3 SD Memory Card Controller Response Register 3 00000000

Bit	31	30	29	28	27	26	25	24	23	22	21	20	19	18	17	16
Name	RESP[127:96][31:16]															
Type	RO															
Reset	0	0	0	0	0	0	0	0	0	0	0	0	0	0	0	0
Bit	15	14	13	12	11	10	9	8	7	6	5	4	3	2	1	0
Name	RESP[127:96][15:0]															
Type	RO															
Reset	0	0	0	0	0	0	0	0	0	0	0	0	0	0	0	0

Overview: The register contains parts of the last SD memory card bus response. Register fields SDC_RESP0, SDC_RESP1, SDC_RESP2 and SDC_RESP3 compose the last SD memory card bus response. For response of type R2, i.e. response of commands ALL_SEND_CID, SEND_CSD and SEND_CID, only bit 127 to 0 of the response token are stored in register fields SDC_RESP0, SDC_RESP1, SDC_RESP2 and SDC_RESP3. For response of other types, only bit 39 to 8 of the response token are stored in register field SDC_RESP0.

Bit(s)	Mnemonic	Name	Description
31:0	**RESP[127:96]**	RESP_127_96	

This document contains information that is proprietary to MediaTek Inc.
Unauthorized reproduction or disclosure of this information in whole or in part is strictly prohibited.
MEDIATEK CONFIDENTIAL FOR dengzhen@far-sightedmobile.com USE ONLY

A0270040 SDC_CMDSTA SD Memory Card Controller Command Status Register 00000000

Bit	31	30	29	28	27	26	25	24	23	22	21	20	19	18	17	16
Name																
Type																
Reset																
Bit	15	14	13	12	11	10	9	8	7	6	5	4	3	2	1	0
Name														RSPCRCERR	CMDTO	CMDRDY
Type														RC	RC	RC
Reset														0	0	0

Overview: The register contains the status of SD controller during command execution and that of SD bus protocol after command execution when the SD controller is configured as the host of SD memory card. The register can also be used as an interrupt source. The register is cleared when being read. Meanwhile, if the interrupt is enabled and thus interrupt caused by the register is generated, reading the register will de-assert the interrupt.

Bit(s)	Mnemonic	Name	Description
2	**RSPCRCERR**	RSPCRCERR	**CRC error on CMD detected** '1' indicates the SD controller detects a CRC error after reading a response from the CMD line. 0: Otherwise 1: SD controller detects a CRC error after reading a response from the CMD line.
1	**CMDTO**	CMDTO	**Time-out on CMD detected** '1' indicates the SD controller detects a time-out condition while waiting for a response on the CMD line. 0: Otherwise 1: SD controller detects a timeout condition while waiting for a response on the CMD line.
0	**CMDRDY**	CMDRDY	**For command without response, the register bit will be 1 once the command is completed on SD bus** For command with response, the register bit will be 1 whenever the command is issued onto the SD bus and its corresponding response is received without CRC error. 0: Otherwise 1: Command with/without response is finished successfully without CRC error.

A0270044 SDC_DATSTA SD Memory Card Controller Data Status Register 00000000

Bit	31	30	29	28	27	26	25	24	23	22	21	20	19	18	17	16
Name																
Type																
Reset																
Bit	15	14	13	12	11	10	9	8	7	6	5	4	3	2	1	0
Name							DATCRCERR								DATTO	BLKDONE
Type							RC								RC	RC
Reset							0	0	0	0	0	0	0	0	0	0

Overview: The register contains the status of SD controller during data transfer on DAT line(s) when the SD controller is configured as the host of SD memory card. The register can be used as an interrupt source. The

This document contains information that is proprietary to MediaTek Inc.
Unauthorized reproduction or disclosure of this information in whole or in part is strictly prohibited.

MEDIATEK CONFIDENTIAL FOR dengzhenli@ far-sightedmobile.com USE ONLY

register is cleared when being read. Meanwhile, if the interrupt is enabled and thus interrupt caused by the register is generated, reading the register will de-assert the interrupt.

Bit(s)	Mnemonic	Name	Description
9:2	**DATCRCERR**	DATCRCERR	**CRC error on DAT detected** '1' indicates that the SD controller detects a CRC error for bit n after reading a block of data from the DAT line or SD signals a CRC error after writing a block of data to the DAT line. 0: Otherwise 1: SD controller detects a CRC error after reading a block of data from the DAT line or SD signals a CRC error after writing a block of data to the DAT line. *Note: n is 7 ~ 1 for 8-bits mode. Each bit is read and cleared individually.*
1	**DATTO**	DATTO	**Time-out on DAT detected** A '1' indicates that the SD controller detects a time-out condition while waiting for data token on the DAT line. 0: Otherwise 1: SD controller detects a time-out condition while waiting for data token on the DAT line.
0	**BLKDONE**	BLKDONE	**Indicates the status of data block transfer** 0: Otherwise 1: A data block is successfully transferred.

A0270048 SDC_CSTA SD Memory Card Status Register 00000000

Bit	31	30	29	28	27	26	25	24	23	22	21	20	19	18	17	16
Name	**CSTA [31:0][31:16]**															
Type	RC															
Reset	0	0	0	0	0	0	0	0	0	0	0	0	0	0	0	0
Bit	15	14	13	12	11	10	9	8	7	6	5	4	3	2	1	0
Name	**CSTA [31:0][15:0]**															
Type	RC															
Reset	0	0	0	0	0	0	0	0	0	0	0	0	0	0	0	0

Overview: After commands with R1 and R1b respond this register containing the status of the SD card, it will be used as a response interrupt source. In all register fields, logic high indicates error, and logic low indicates no error. The register is cleared when being read. Meanwhile, if the interrupt is enabled and thus interrupt caused by the register is generated, reading the register will de-assert the interrupt.

Bit(s)	Mnemonic	Name	Description
31:0	**CSTA [31:0]**	CSTA_31_0	CSTA31: OUT_OF_RANGE. The command's argument is out of the allowed range for this card. CSTA30: ADDRESS_ERROR. A misaligned address that does not match the block length is used in the command. CSTA29: BLOCK_LEN_ERROR. The transferred block length is not allowed for this card, or the number of transferred bytes does not match the block length. CSTA28: ERASE_SEQ_ERROR. An error in the sequence of erase commands occurs. CSTA27: ERASE_PARAM. An invalid selection of write-blocks for erase occurs. CSTA26: WP_VIOLATION. Attempt to program a write-protected

This document contains information that is proprietary to MediaTek Inc.
Unauthorized reproduction or disclosure of this information in whole or in part is strictly prohibited.
MEDIATEK CONFIDENTIAL FOR dengzhenli@far-sightedmobile.com USE ONLY

block.
CSTA25: Reserved. Return to 0.
CSTA24: LOCK_UNLOCK_FAILED. Set when a sequence or password error is detected in lock/unlock card command or if there is an attempt to access a locked card.
CSTA23: COM_CRC_ERROR. The CRC check of the previous command fails.
CSTA22: ILLEGAL_COMMAND. Command not legal for the card state.
CSTA21: CARD_ECC_FAILED. Card internal ECC is applied but fails to correct the data.
CSTA20: CC_ERROR. Internal card controller error.
CSTA19: ERROR. A general or unknown error occurs during the operation.
CSTA18: UNDERRUN. The card cannot sustain data transfer in stream read mode.
CSTA17: OVERRUN. The card cannot sustain data programming in stream write mode.
CSTA16: CID/CSD_OVERWRITE. It can be either one of the following errors: 1) The CID register has been already written and cannot be overwritten; 2) The read-only section of the CSD does not match the card; 3) An attempt to reverse the copy (set as the original) or permanent WP (unprotected) bits is made.
CSTA[15: 4]: Reserved. Return to 0.
CSTA3: AKE_SEQ_ERROR. Error in the sequence of authentication process
CSTA[2: 0]: Reserved. Return to 0.

A027004C SDC_IRQMASK0 SD Memory Card IRQ Mask Register 0 00000000

Bit	31	30	29	28	27	26	25	24	23	22	21	20	19	18	17	16
Name	IRQMASK [31:0][31:16]															
Type	RW															
Reset	0	0	0	0	0	0	0	0	0	0	0	0	0	0	0	0
Bit	15	14	13	12	11	10	9	8	7	6	5	4	3	2	1	0
Name	IRQMASK [31:0][15:0]															
Type	RW															
Reset	0	0	0	0	0	0	0	0	0	0	0	0	0	0	0	0

Overview: The register contains parts of SD memory card interrupt mask register. See the register descriptions of register SDC_IRQMASK1 for reference. The register masks interrupt sources from register SDC_CMDSTA and SDC_DATSTA. IRQMASK[3:0] is for SDC_CMDSTA, and IRQMASK[18:16] for SDC_DATSTA. Note that IRQMASK[18] masks SDC_DATSTA[9:2] together. '1' in some bits of the register masks the corresponding interrupt source with the same bit position. For example, if IRQMASK[0] is 1, then the interrupt source from register field CMDRDY of register SDC_CMDSTA will be masked. '0' in some bits does not cause interrupt mask on the corresponding interrupt source from registers SDC_CMDSTA and SDC_DATSTA.

Bit(s)	Mnemonic	Name	Description
31:0	**IRQMASK [31:0]**	IRQMASK_31_0	

This document contains information that is proprietary to MediaTek Inc.
Unauthorized reproduction or disclosure of this information in whole or in part is strictly prohibited.

A0270050 **SDC_IRQMASK1** **SD Memory Card IRQ Mask Register 1** **00000000**

Bit	31	30	29	28	27	26	25	24	23	22	21	20	19	18	17	16
Name	IRQMASK [63:32][31:16]															
Type	RW															
Reset	0	0	0	0	0	0	0	0	0	0	0	0	0	0	0	0
Bit	15	14	13	12	11	10	9	8	7	6	5	4	3	2	1	0
Name	IRQMASK [63:32][15:0]															
Type	RW															
Reset	0	0	0	0	0	0	0	0	0	0	0	0	0	0	0	0

Overview: The register contains parts of SD memory card interrupt mask register. Registers SDC_IRQMASK1 and SDC_IRQMASK0 compose the SD memory card interrupt mask register. The register masks interrupt sources from register SDC_CSTA. '1' in some bits of the register masks the corresponding interrupt source with the same bit position. For example, if IRQMASK[63] is 1, then the interrupt source from register field OUT_OF_RANGE of register SDC_ CSTA will be masked. '0' in some bits does not cause interrupt mask on the corresponding interrupt source from register SDC_CSTA.

Bit(s)	Mnemonic	Name	Description
31:0	**IRQMASK [63:32]**	IRQMASK_63_32	

A0270054 **SDIO_CFG** **SDIO Configuration Register** **00000000**

Bit	31	30	29	28	27	26	25	24	23	22	21	20	19	18	17	16
Name																
Type																
Reset																
Bit	15	14	13	12	11	10	9	8	7	6	5	4	3	2	1	0
Name											DISSEL		INTCSEL	DSBSEL		INTEN
Type											RW		RW	RW		RW
Reset											0		0	0		0

Overview: The register is used to configure functions for SDIO.

Bit(s)	Mnemonic	Name	Description
5	**DISSEL**	DISSEL	**Selects data block interrupt source** 0: The host detects SDIO interrupt during interrupt period between two data blocks of multiple block data access. 1: The host ignores SDIO interrupt during interrupt period between two data blocks of multiple block data access.
3	**INTCSEL**	INTCSEL	**Selects interrupt control** 0: The host detects DAT1 low as SDIO interrupt. 1: The host detects DAT3/DAT2/DAT1/DAT0 4'b1101 as SDIO interrupt.
2	**DSBSEL**	DSBSEL	**Selects data block start bit** 0: Use data line 0 as start bit of data block. Other data lines are ignored. 1: Start bit of a data block is received only when all data line 0-3 become low.
0	**INTEN**	INTEN	**Enables interrupt for SDIO** 0: Disable

This document contains information that is proprietary to MediaTek Inc.
Unauthorized reproduction or disclosure of this information in whole or in part is strictly prohibited.
MEDIATEK CONFIDENTIAL FOR dengzhenli@ far-sightedmobile.com USE ONLY

Bit(s)	Mnemonic	Name	Description
			1: Enable

A0270058 **SDIO_STA** **SDIO Status Register** **00000000**

Bit	31	30	29	28	27	26	25	24	23	22	21	20	19	18	17	16
Name																
Type																
Reset																
Bit	15	14	13	12	11	10	9	8	7	6	5	4	3	2	1	0
Name																**IRQ**
Type																RO
Reset																0

Overview: This register is used to identify if there is SDIO interrupt during the interrupt period on data line.

Bit(s)	Mnemonic	Name	Description
0	**IRQ**	IRQ	**SDIO interrupt exists on the data line.** For example, when in the interrupt period or the 1 -bit data line mode and DAT1/5 goes low from high, this bit will become 1 from 0. If DAT1/5 goes high from low, this bit will become 0 from 1. 0: There is no SDIO interrupt existing on the data line. 1: There is SDIO interrupt existing on the data line.

A0270080 **CLK_RED** **CLK Latch Configuration Register** **00000000**

Bit	31	30	29	28	27	26	25	24	23	22	21	20	19	18	17	16
Name			**CMD_RED**													
Type			RW													
Reset			0													
Bit	15	14	13	12	11	10	9	8	7	6	5	4	3	2	1	0
Name			**DAT_RED**						**CLKPAD_RED**	**CLK_LATCH**						
Type			RW						RW	RW						
Reset			0						0	0						

Overview: The register is used to configure the MSDC sample data/response clock. Note that only when MSDC_IOCON[19] = 1 will the host latch response; otherwise MSDC FSM will handle the response from PAD directly.

Bit(s)	Mnemonic	Name	Description
29	**CMD_RED**	CMD_RED	**Determines the command response from card output is latched at falling edge or rising edge of internal clock** Only effective when CLK_LATCH = 1 0: Internal clock rising edge to latch response 1: Internal clock falling edge to latch response
13	**DAT_RED**	DAT_RED	**Determines the input data from card output is latched at falling edge or rising edge of internal sample clock** Only effective when CLK_LATCH = 1 0: Internal clock rising edge to latch data

This document contains information that is proprietary to MediaTek Inc.
Unauthorized reproduction or disclosure of this information in whole or in part is strictly prohibited.
MEDIATEK CONFIDENTIAL FOR dengzhenli@far-sightedmobile.com USE ONLY

Bit(s)	Mnemonic	Name	Description
			1: Internal clock falling edge to latch data
7	**CLKPAD_RED**	CLKPAD_RED	**Determines the input data from card is latched at falling edge or rising edge of the feedback clock from pad** The suggested setting is 0 when SD serial clock is lower than 25MHz. The suggestion setting is 1 when SD serial clock is higher than 25MHz. The suggestion setting is 0 for MMC card no matter the serial clock rate is high speed or default speed. Only effective when CLK_LATCH = 0. 0: Internal feedback clock rising edge to latch data/response 1: Internal feedback clock falling edge to latch data/response
6	**CLK_LATCH**	CLK_LATCH	**Determines which clock to latch data from card** The suggested setting is 1 if SCLKF in register field MSDC_CFG is 0x0. Otherwise, the suggested setting is 0. 0: Internal feedback clock is used to latch data/response from card. 1: Internal clock is used to latch data/response from card.

A0270098 **DAT_CHECKSUM** **MSDC Rx Data Checksum Register** **00000000**

Bit	31	30	29	28	27	26	25	24	23	22	21	20	19	18	17	16
Name	DAT_CHECKSUM[31:16]															
Type	RW															
Reset	0	0	0	0	0	0	0	0	0	0	0	0	0	0	0	0
Bit	15	14	13	12	11	10	9	8	7	6	5	4	3	2	1	0
Name	DAT_CHECKSUM[15:0]															
Type	RW															
Reset	0	0	0	0	0	0	0	0	0	0	0	0	0	0	0	0

Overview: The register is used to compete the checksum value of Rx read data

Bit(s)	Mnemonic	Name	Description
31:0	**DAT_CHECKSUM**	DAT_CHECKSUM	The checksum algorithm is 32-bit XOR.

3.18 BTIF

3.18.1 General Description

Bluetooth Interface (BTIF) is designed in SOC (BT+GSM) as the UART interface between the BT chip and baseband chip. As in the UART design, BTIF is an APB slave which transmits or receives data by MCU access or through DMA/VFIFO.

This document contains information that is proprietary to MediaTek Inc.
Unauthorized reproduction or disclosure of this information in whole or in part is strictly prohibited.
MEDIATEK CONFIDENTIAL FOR dengzhen@far-sightmobile.com USE ONLY

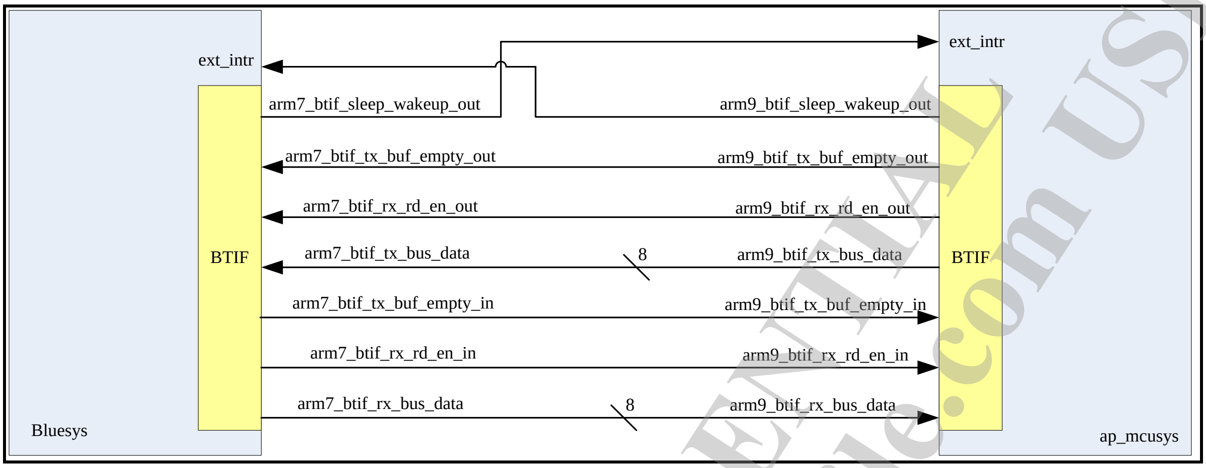

Figure 49. Interface connection between BT and baseband system

3.18.2 Register Definition

BTIF+0000h Rx Buffer Register BTIF_RBR

Bit	15	14	13	12	11	10	9	8	7	6	5	4	3	2	1	0
Name									**RBR[7:0]**							
Type									RO							

RBR Rx buffer register. A read-only register. The received data can be read by accessing this register. This register is valid only when BTIF_FAKELCR[7] (0x0C) is 0.

BTIF+0000h Tx Holding Register BTIF_THR

Bit	15	14	13	12	11	10	9	8	7	6	5	4	3	2	1	0
Name									**THR[7:0]**							
Type									WO							

THR Tx holding register. A write-only register. The data to be transmitted are written to this register and sent to the Bluetooth via BTIF. This register is valid only when BTIF_FAKELCR[7] (0x0C) is 0.

BTIF+0004h Interrupt Enable Register BTIF_IER

Bit	15	14	13	12	11	10	9	8	7	6	5	4	3	2	1	0
Name															**TXEEN**	**RXFEN**
Type															W/R	W/R
Reset															0	0

MEDIATEK CONFIDENTIAL FOR dengzhenli@far-sightedmobile.com USE ONLY

This document contains information that is proprietary to MediaTek Inc.
Unauthorized reproduction or disclosure of this information in whole or in part is strictly prohibited.

This register is valid only when BTIF_FAKELCR[7] is 0.

TXEEN Enables Tx empty interrupt. When set to 1, an interrupt will be generated if the Tx holding register is empty.
0 No interrupt will be generated if the Tx holding register is empty.
1 An interrupt will be generated if the Tx holding register is empty

RXFEN Enables Rx full interrupt. When set to 1, an interrupt will be generated if the Rx buffer contains data.
0 No interrupt will be generated if the Rx buffer contains data.
1 An interrupt will be generated if the Rx buffer contains data.

BTIF+0008h **Interrupt Identification Register** **BTIF_IIR**

Bit	15	14	13	12	11	10	9	8	7	6	5	4	3	2	1	0
Name													**ID2**	**ID1**	**ID0**	**NINT**
Type													RO	RO	RO	RO
Reset													0	0	0	1

This register is valid only when BTIF_FAKELCR (0x0C) is not 0xBF.

IIR Identifies if there are pending interrupts. The following table lists the IIR[5:0] codes associated with the possible interrupts:

Table 53. IIR[5:0] codes associated with the possible interrupts

IIR[3:0]	Priority level	Interrupt	Source
0001	-	No pending interrupt	
0100	1	Rx data received	Rx data received
1100	2	Rx data time-out	Time-out on character in Rx buffer
0010	3	Tx holding register empty	Tx holding register empty.

Rx data received interrupt
A Rx received interrupt (IIR[3:0] = 0x04) is generated when RXFEN (IER[0]) is set and Rx data are placed in the Rx buffer register. The interrupt is cleared by reading the Rx buffer register.

Rx data time-out interrupt
The Rx data time-out interrupt will be generated if all of the following conditions are applied:

1. Rx buffer is empty.
2. The most recent character is received longer than (RTOCNT*bclk period*4).
3. RXFEN (IER[0]) is set to 1.

This document contains information that is proprietary to MediaTek Inc.
Unauthorized reproduction or disclosure of this information in whole or in part is strictly prohibited.
MEDIATEK CONFIDENTIAL FOR dengzhenhua@far-sightedmobile.com USE ONLY

The time-out timer is restarted upon receipt of a new byte from the Rx shift register. This interrupt is only valid while VFIFO is used. This register is cleared by reading the VFIFO status register (0x4C).

Tx holding register empty

A Tx holding register empty interrupt (IIR[3:0] = 0x02) is generated when TXEEN(IER[1]) is set and no data are placed in the Tx holding register. This interrupt is cleared by writing data into BTIF_THR (0x00).

BTIF+0008h FIFO_CTRL BTIF_FIFOCTRL

Bit	15	14	13	12	11	10	9	8	7	6	5	4	3	2	1	0
Name														CLRT	CLRR	
Type														WO	WO	
Reset														0	0	

This register is valid only when BTIF_FAKELCR (0x0C) is not 0xBF.

CLRT Clears transmit FIFO. This bit is self-clearing.
- **0** Leave Tx FIFO intact.
- **1** Clear all the bytes in Tx FIFO.

CLRR Clears receive FIFO. This bit is self-clearing.
- **0** Leave Rx FIFO intact.
- **1** Clear all the bytes in Rx FIFO.

BTIF+000Ch FAKE LCR BTIF_FAKELCR

Bit	15	14	13	12	11	10	9	8	7	6	5	4	3	2	1	0
Name									FAKELCR[7:0]							
Type									R/W							
Reset									0	0	0	0	0	0	0	0

FAKELCR This register is added to synchronize the software control method of UART. When FAKELCR[7] is 1, RBR(0x00), THR(0x00) and IER(0x04) will not be readable/writable. When FAKELCR is 0xBF, RBR(0x00), THR(0x00), IER(0x04), IIR(0x08) and LSR(0x14) will not be readable/writable.

BTIF+0014h Line Status Register BTIF_LSR

Bit	15	14	13	12	11	10	9	8	7	6	5	4	3	2	1	0
Name										TEMT	THRE					DR

This document contains information that is proprietary to MediaTek Inc.
Unauthorized reproduction or disclosure of this information in whole or in part is strictly prohibited.
MEDIATEK CONFIDENTIAL FOR dengzhenli@far-sightedmobile.com USE ONLY

Type										RO	RO					RO
Reset										1	1					0

LSR Line status register. Readable when LCR != 0xBF.

TEMT Tx holding register is empty.
- **0** Empty conditions are not met.
- **1** This bit is set when the Tx holding register is empty.

THRE Indicates if Tx FIFO is reduced to its trigger level
- **0** Reset whenever the contents of Tx FIFO are more than its trigger level (FIFOs are enabled)
- **1** Set whenever the contents of Tx FIFO are reduced to its trigger level (FIFOs are enabled)

DR Data Ready
- **0** Cleared by reading the Rx buffer.
- **1** Set by the Rx buffer becoming full.

BTIF+0048h Sleep Enable Register BTIF_SLEEP_EN

Bit	15	14	13	12	11	10	9	8	7	6	5	4	3	2	1	0
Name																SLEEP_EN
Type																R/W
Reset																0

SLEEP_EN For sleep mode issue
- **0** Does not deal with sleep mode indication signal
- **1** Activate flow control according to software initial settings when the chip enters the sleep mode. Release hardware flow when the chip wakes up.

BTIFn+004Ch DMA Enable Register BTIF_DMA_EN

Bit	15	14	13	12	11	10	9	8	7	6	5	4	3	2	1	0
Name														TO_CNT_AUTORST	TX_DMA_EN	RX_DMA_EN
Type														R/W	R/W	R/W
Reset														0	0	0

RX_DMA_EN RX_DMA mechanism enabling signal
- **0** Does not use DMA in Rx.

MEDIATEK CONFIDENTIAL FOR dengzhenli@far-sightedmobile.com USE ONLY

This document contains information that is proprietary to MediaTek Inc.
Unauthorized reproduction or disclosure of this information in whole or in part is strictly prohibited.

1 Use DMA in Rx. When this register is enabled, the flow control is based on the DMA threshold and generates a time-out interrupt

TX_DMA_EN TX_DMA mechanism enabling signal

0 Does not use DMA in Tx.

1 Use DMA in Tx. When this register is enabled, the flow control is based on the DMA threshold and generates a time-out interrupt for DMA.

TO_CNT_AUTORST Time-out counter auto reset register

0 After Rx time-out takes place, the software shall reset the interrupt by reading BTIF 0x4C.

1 The time-out counter will be auto reset.

BTIF+0054h Rx Time-out Count BTIF_RTOCNT

Bit	15	14	13	12	11	10	9	8	7	6	5	4	3	2	1	0
Name									**RTOCNT[7:0]**							
Type									R/W							
Reset									0x40							

RTOCNT Used for Rx time-out interrupt. The Rx time-out interrupt will be generated when:

1. RXFEN (0x04[0]) is set to 1.
2. Rx buffer is empty.
3. The most recent character is received longer than (RTOCNT*bclk period*4).

BTIF+0060h TRX_TRIGGER_LEVEL BTIF_TRI_LVL

Bit	15	14	13	12	11	10	9	8	7	6	5	4	3	2	1	0
Name									**BTIF_LOOP**	**RX_TRI_LVL**			**TX_TRI_LVL**			
Type									R/W	R/W			R/W			
Reset									0x0	0x5			0x0a			

TX_TRI_LVL Used for Tx FIFO trigger threshold. THRE(0x14[5]) will be set if the data in the TXFIFO are less than TX_TRI_LVL.

RX_TRI_LVL Used for Rx FIFO trigger threshold. A Rx trigger interrupt (IIR(0x08]) = 4) might be set if the data in the RXFIFO are more than RX_TRI_LVL. The output flow control signal will also be set if the data in the RXFIFO are more than RX_TRI_LVL.

BTIF_LOOP Enables BTIF loop back mode. The data output from Tx will be received by Rx.

This document contains information that is proprietary to MediaTek Inc.
Unauthorized reproduction or disclosure of this information in whole or in part is strictly prohibited.
MEDIATEK CONFIDENTIAL FOR dengzheni@far-sightedmobile.com USE ONLY

BTIF+0064h SLEEP_WAKEUP **BTIF_WAK**

Bit	15	14	13	12	11	10	9	8	7	6	5	4	3	2	1	0
Name																**SLEEP_WAKE**
Type																WO
Reset																1

SLEEP_WAKE ARM9 side btif_sleep_wakeup_in_b is connected to eint[16] (ARM9 has eint[19:0]. ARM7 side btif_sleep_wakeup_in_b is connected to eint[0] (ARM7 has eint[3:0])

BTIF+0068h ASYNC_WAIT_TIME **BTIF_WAT_TIME**

Bit	15	14	13	12	11	10	9	8	7	6	5	4	3	2	1	0
Name											**WAT_TIME_2**			**WAT_TIME_1**		
Type											R/W			R/W		
Reset											0X2			0x2		

ASYNC_WAIT_TIME Sets up waiting time of RX read-out.
WAT_TIME_1 The first level of wait time.
WAT_TIME_2 The second level of wait time.
Notes: The value of WAT_TIME_1/ WAT_TIME_1 cannot be smaller than 0x2.

BTIF+006Ch NEW_HANDSHAKE **BTIF_HANDSHAKE**

Bit	15	14	13	12	11	10	9	8	7	6	5	4	3	2	1	0
Name														**RTO_EXT**	**HIGH_SPEED_EN**	**HANDSHAKE_EN**
Type														R/W	R/W	R/W
Reset														0	0	1

NEW_HANDSHAKE The default value of handshake is 0. The function of handshake is disabled. The function of BTIF has limitation. The ratio of bclk cannot be bigger than 2; otherwise, two system data transmissions will be wrong. If the value of handshake is 1, the ratio of bclk will be free.
HANDSHAKE_EN Enables handshake mode.
high_speed_en Enables high speed mode. Reserved.
RTO_EXT Extends the value of RX time-out counter (16*rto_time).

This document contains information that is proprietary to MediaTek Inc.
Unauthorized reproduction or disclosure of this information in whole or in part is strictly prohibited.
MEDIATEK CONFIDENTIAL FOR dengzhenli@ far-sightedmobile.com USE ONLY